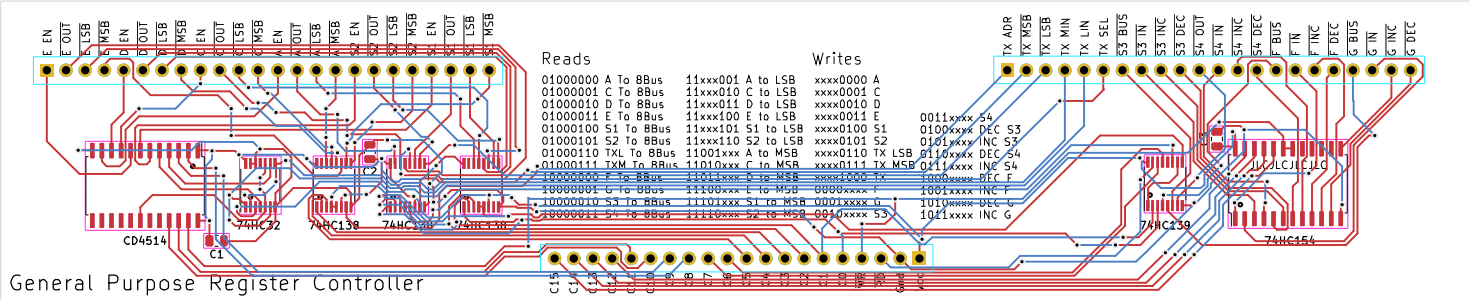

General Purpose Register Controller