CONTROL LOGIC UNIT

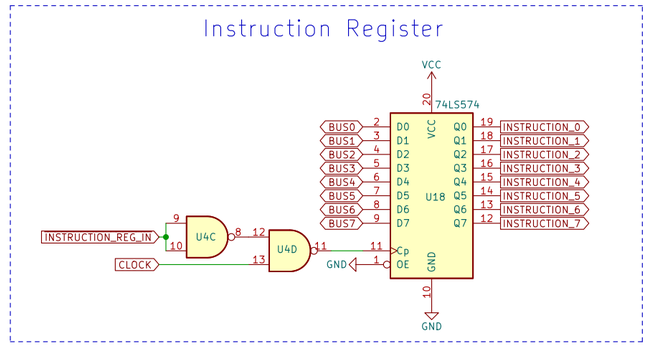

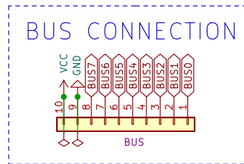

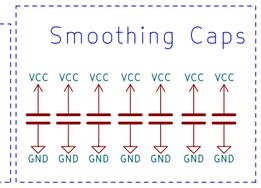

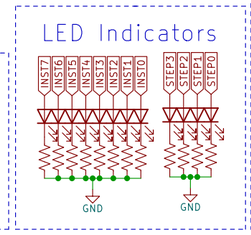

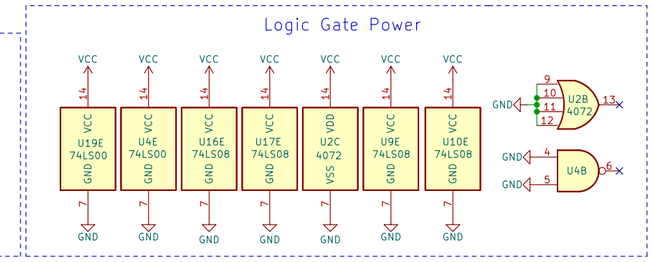

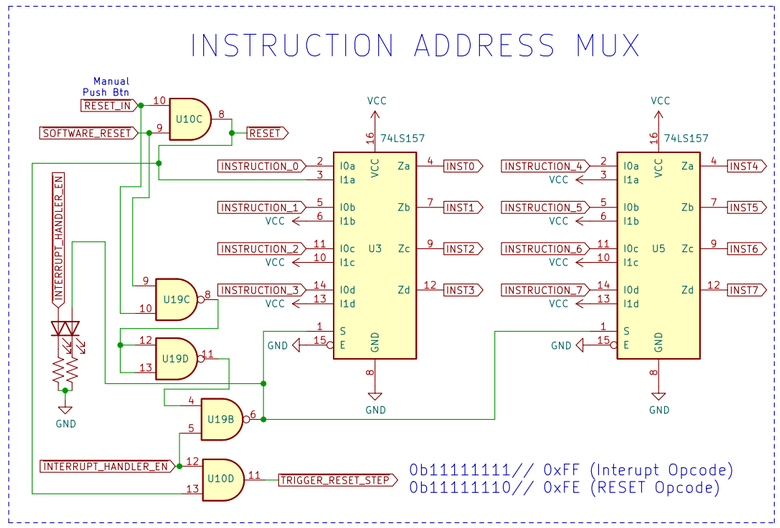

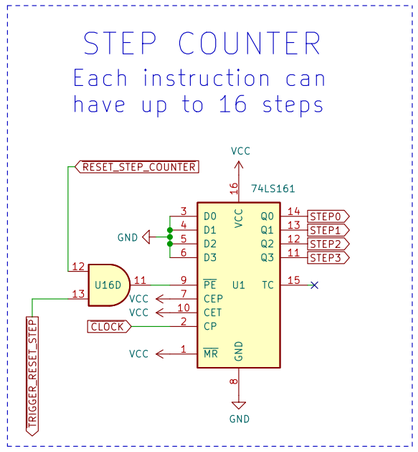

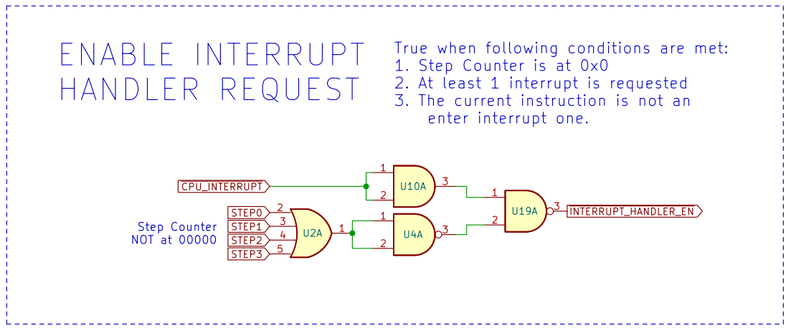

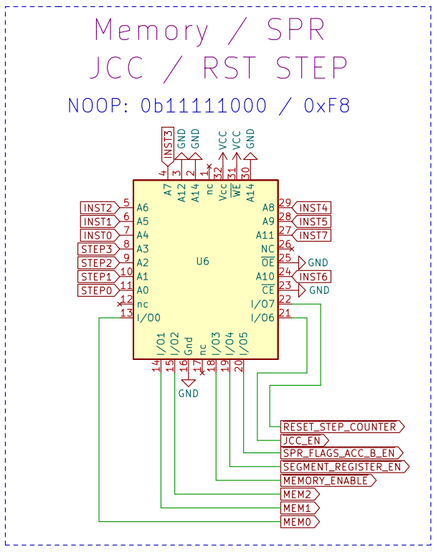

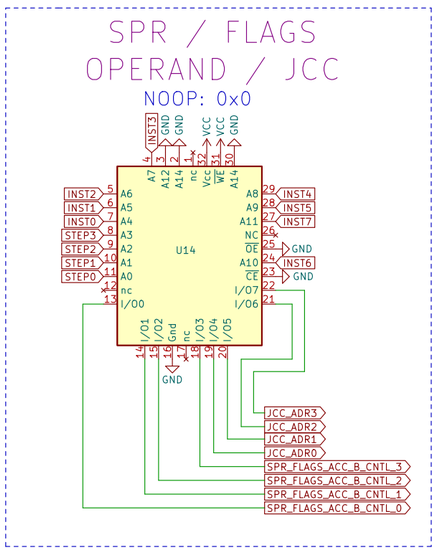

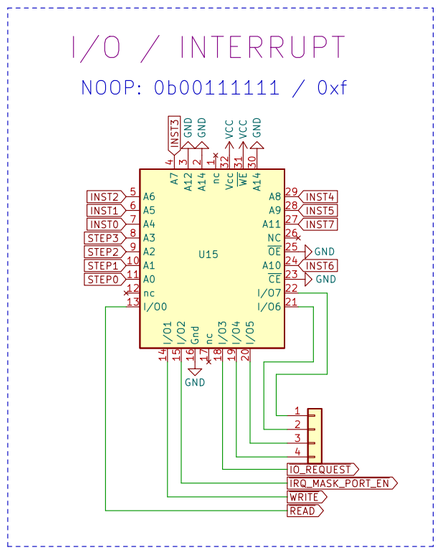

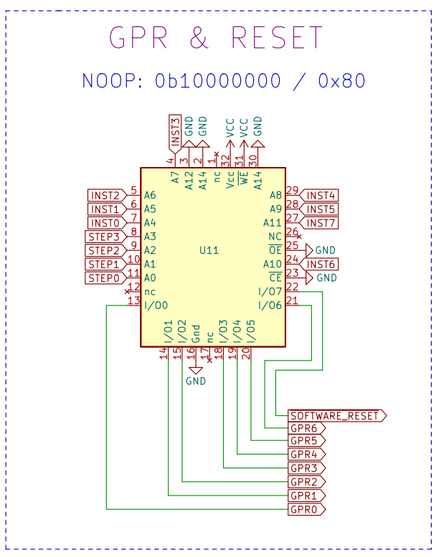

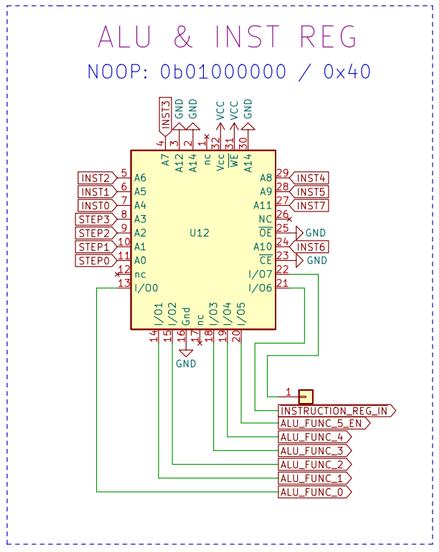

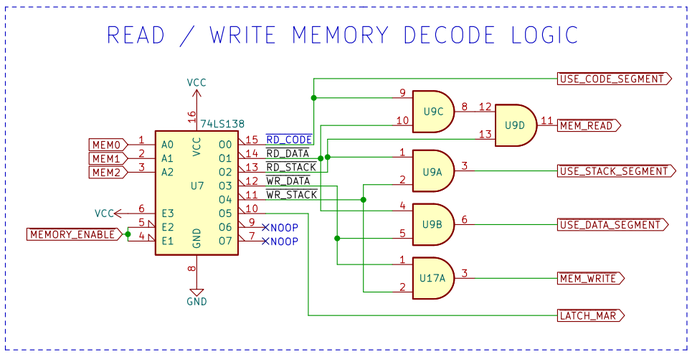

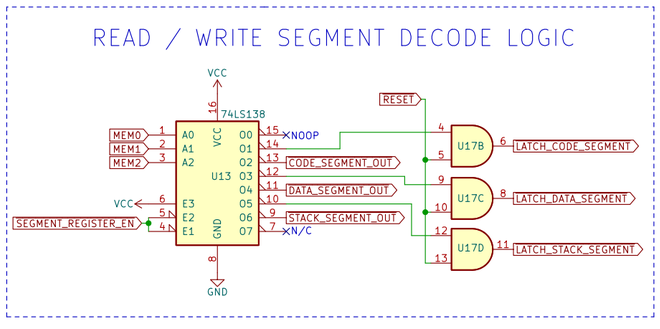

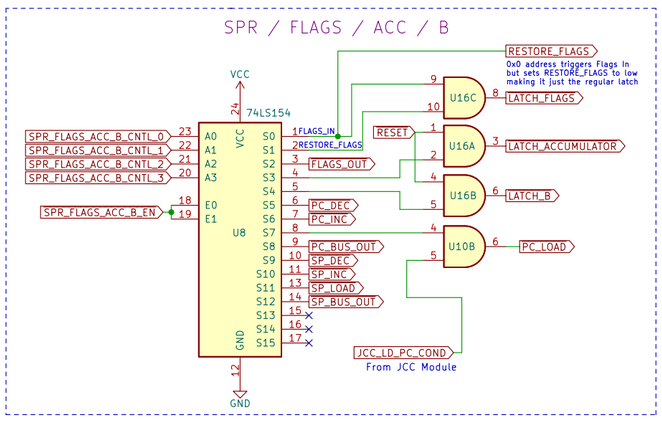

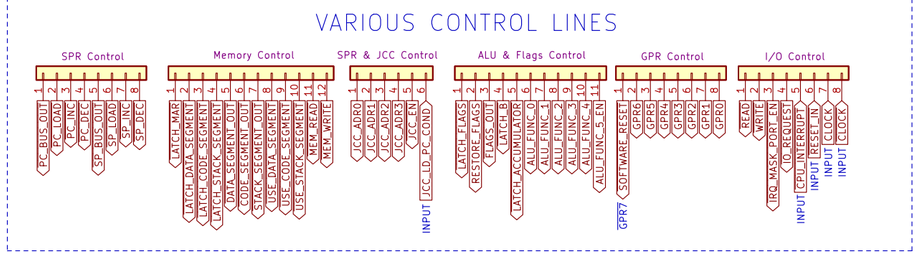

Interrupt Request Logic
Operation Counter
Instruction Register
EEPROM Microcode
theWickedWebDev/8-bit-computer

Sheet: /
File: control-unit.kicad_sch

Title: Control Logic Unit

Size: User	Date: 2022-02-10	**Rev: v6**
KiCad E.D.A. eeschema (6.0.0-0)		Id: 1/1