Transformer Design (220v-15v)

Theamey Thim NPIC19285

August 19, 2025

1 General description

Generally, in daily use, the power supply is used to decrease the voltage from AC to DC. So we designed a step-down transformer to do the simple stepdown. In short, the result is a step-down design of AC to DC.

2 Purpose

In creating transformer core, an important part is an important part in contact magnetic to a core-to-core, sending from one to another. For transformer I designed it has characteristics simple how to work voltage input 220v AC and voltage output 15v DC, which have power 5w.

2.1 Important

About important in designing's transformer 220v AC to 15v DC:

- for use charge battery
- use which electrical equipment(computer, phone, lamp...)
- text materials electronic
- power electronic

2.2 Parameter

As we have already briefly mentioned above, here are some of the parameters that the transformer works with:

- input voltage 220V AC
- input current 0.0161A AC
- output voltage 15V DC
- output current 0.3A DC
- frequency 50Hz
- power 5W
- core EI 40 (silicon steel)

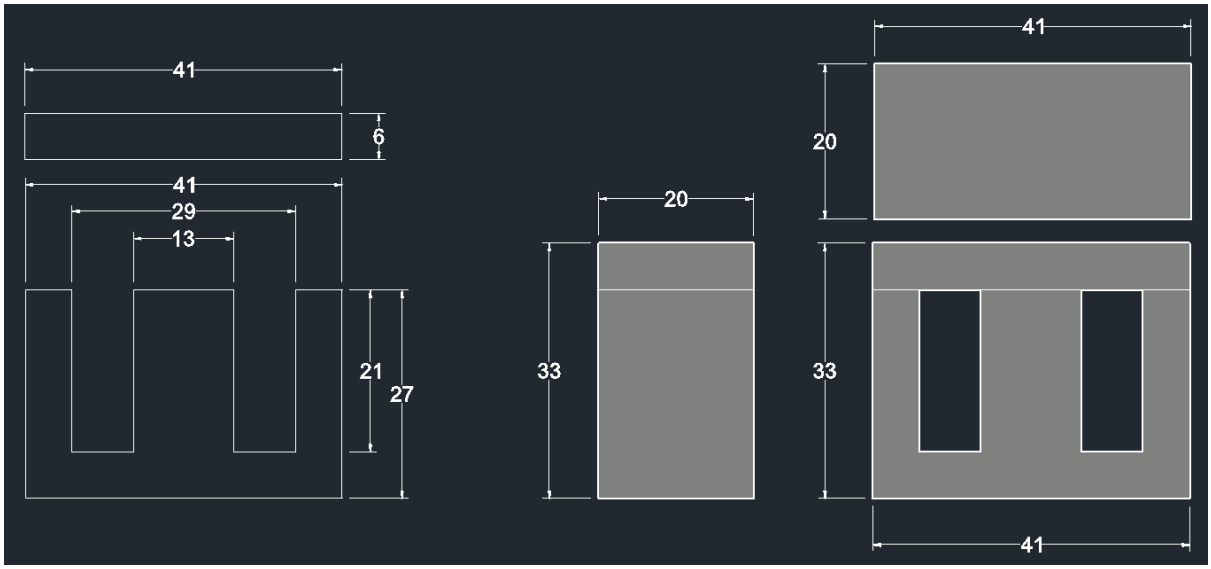

Figure 1: EI40

2.3 Core

Core is a part for send by conect magnetic to a core-to-core. Core EI40 is silicon steel for frequency 50Hz do work performant for use in designed's transformer circuit electrical AC 220V to DC 15V step-down transformer low frequency 50Hz.

Core type	B_{sat}	**Relative core loss**	**Applications**
Laminations iron, silicon steel	1.5 – 2.0 T	high	50–60 Hz transformers, inductors
Powdered cores powdered iron, molypermalloy	0.6 – 0.8 T	medium	1 kHz transformers, 100 kHz filter inductors
Ferrite Manganese-zinc, Nickel-zinc	0.25 – 0.5 T	low	20 kHz – 1 MHz transformers, ac inductors

2.4 Material

In the transformer design, we needed which a material at in convert AC to DC, bout it required at circuit power DC.

- Capacitor : It helps to improve the DC output voltage performance.
- Diode : It in the convert AC voltage to DC voltage
- Resistor : It supports supply led
- board : for catch materials

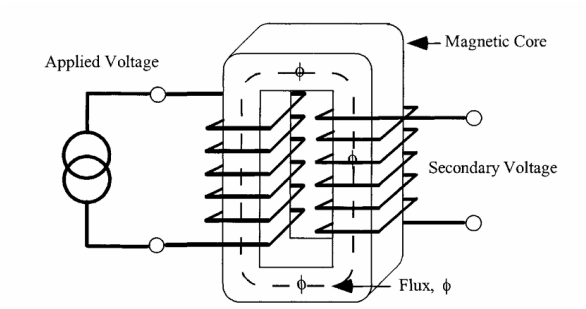

Figure 2: Applied Alternating Voltage Induces an Alternating Flux

- Pin : Connector pin input and pin output
- LED : Lighting and charger power from capacitor
- Ceramic capacitor : from charge voltage contact between input and output

3 Research methods

First of all, we need to know what we want and why. Because the result depends on its cause. In general, the actual use of AC and DC electricity in Cambodia is AC, which is of three phases and mono phases. And the process of our project is to convert AC 220V to 15V and continued DC 15V, which power 5W.

3.1 Theory

According to magnetic theory, when an electric charge passes through a conductor, it will create another electric field, which will cause a mutual repulsion. This causes a magnetic field to oppose each other. If we make a coil of wire in a round or multi-round shape, it will create a large magnetic field. This is the electromotive force passing through the conductor. If we place the same coil of wire next to it, it will become a coil that is affected by the other coil and also creates another electric field. This is the reason for the transformer.

When Receive coil flux magnetic from a coil input voltage is AC 220V. So when coil input do work flux wire output to is AC.Why output voltage from transformer is AC?

It from to a technic in the transmit power a one to one. bout AC is a more importance local to long wire is long loss on a more wire, When you use DC ,because in wire it have resistor, inductor, and capacitor. But for inductor and capacitor we not thing when wire run evenly, when we think is coil any more of spear. Wire resistor? Why we need say about wire resistor?

Because when voltage run wire, resistor in wire it is a barrier to reduce the occurrence of alignment in the circuit. Is equation wire resistor:

$$R = \rho \cdot \frac{l}{A}$$

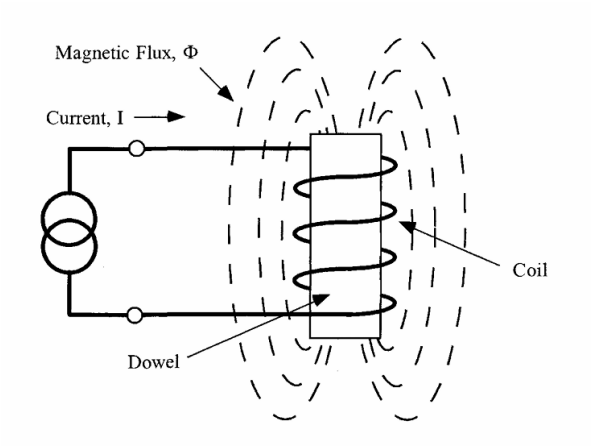

Figure 3: Core I

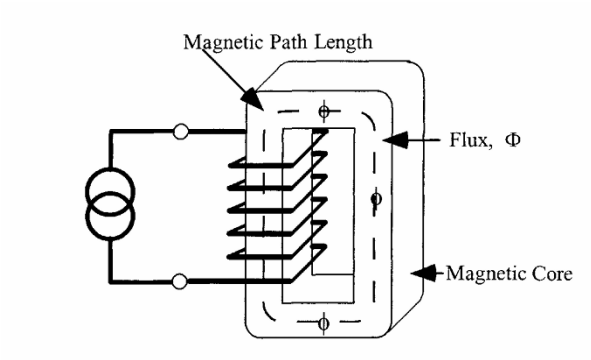

Figure 4: Magnetic Core Confines the Magnetic Field

R : resistor(Ω)
ρ : resistivity(Ωm)
l : length wire(m)
A : wire area(m^2)

Then current run on wire copper a more spear, it create magnetic of is name "Magnetic path length". Where it from? So we think again on magnetic field create from voltage run of wire. So it is a create new current magnetic field "flux magnetic".

$$L = \mu \cdot \frac{N^2 \cdot A}{l}$$

L : Inductor(H)
μ : Permeability(Wb/Am)
N : number of turns in coil($turn$)
A : Area encircled by coil(m^2)
l : length of coil(m) Flux magnetic is magnetic wire and Magnetic path length is the path through which the magnetic field runs. And then Key for inductor is core I. About plane core EI. Why difference I and EI? Use core in transformer any thing they use EI because it the simple and silicon steel. It is thin metal plates easy to install.

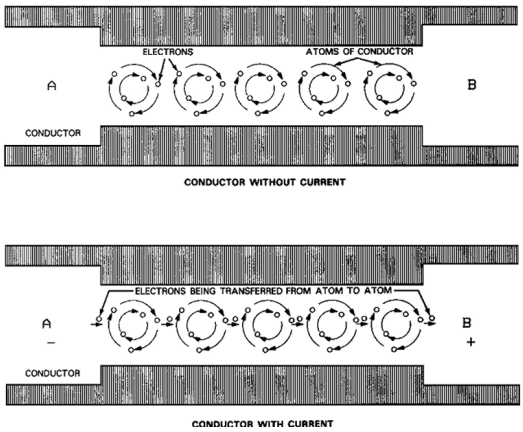

Figure 5: electrons in wire

3.2 About transformer

Transformer for set-up or set-down. Transformer it have a coil or any more coil for output coil. But for transformer's we need two coil the one input coil and one output coil. And is coil isolate. core EI40 silicon steel (Fe, Ze,...).
Loss is the always in transformer from a core and wire. There are the loss power, so we say about wire resistor and models core.

3.2.1 Loss core

Loss it the create from gap but so we see about models core Ac(Area encircled by coil). It causes energy loss.Then create a more hot and noyes signal.

$$P_{fe} = K_{fe} \cdot (\Delta B)^{\beta} \cdot A_c \cdot l_m$$

K_{fe} : constant
β : A_c : cross sectional area
l_m : magnetic path length
$\Delta B = \frac{\lambda 1}{2 n_1 A_c}$
but n_1 : primary turn
$\lambda 1 = \int_{t_0}^{t_1} v(t) dt$
equipment $v(t) = V_{max} \cdot sin(\omega t + \varphi_v)$

3.2.2 Loss wire(copper)

It is a loss from wire resistor, why it have loss? when electrons run of wire copper is not victor and not by step.

$$P_{cu} = \rho \frac{(MLT) \cdot n_1^2 \cdot I_{tot}^2}{W_A \cdot K_u}$$

ρ : resistivity
MLT : Mean length per turn
n_1 : input turn

I_{tot} : current total
W_A : core window area
K_u : winding fill factor

3.3 Turn input and output

Turn is coil depends Voltage, it have a resistor. define sort circuits. Into calculate turn, we have calculate from dimension's coil and area wire. But it don't, because when area wire big and core small. so, turn input and turn output form windows ares core. Mean length per turn is length wire wrap out core. In section 3.6
$MLT = 2 \cdot (L_i + L_o)$.because it core EI.

$$n_1 = \frac{\lambda_1}{2 \cdot \Delta B \cdot Ac}$$
$$n_2 = \frac{n_2}{n}$$

$n = \frac{V_p}{V_s}$ Form for key calculate transformer :

$$\frac{V_s}{V_p} = \frac{n_2}{n_1} = \frac{I_p}{I_s} = K$$

$K > 1$: set-up transformer
$K < 1$: set-down transformer

3.4 Materials

- Core EI40 silicon steel thin panel
- Wire for input coil
- Wire for output coil
- Capacito 1000μF
- Caramic capacitor 100nF
- Resistor 10kΩ
- LED (Red)
- board (67mm x 67mm)
- Soldering wire
- Mylar type
- Terminal block
- Diode 1N4004

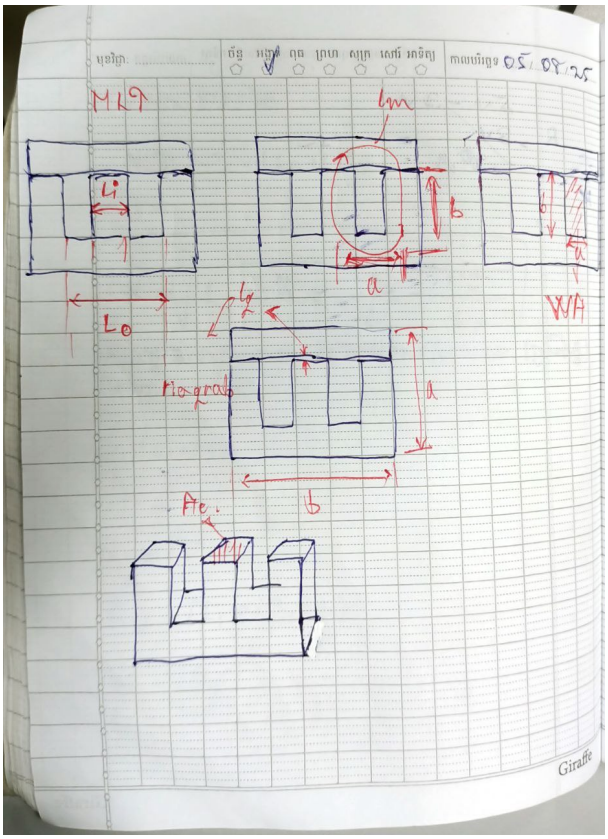

Figure 6: Form core

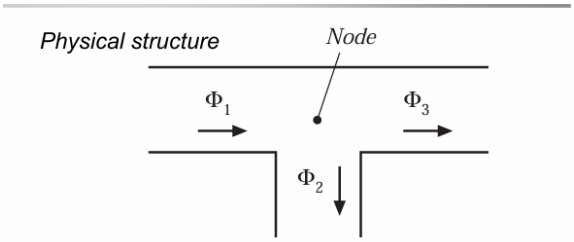

Figure 7: work core

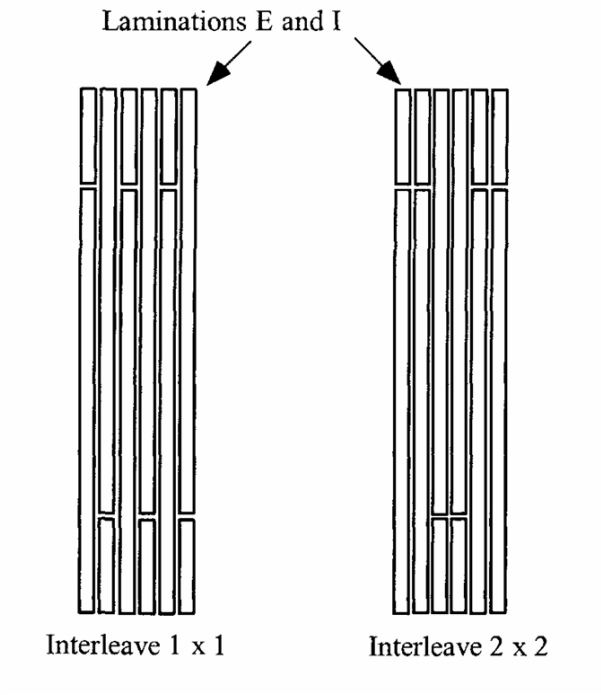

Figure 8: Form core

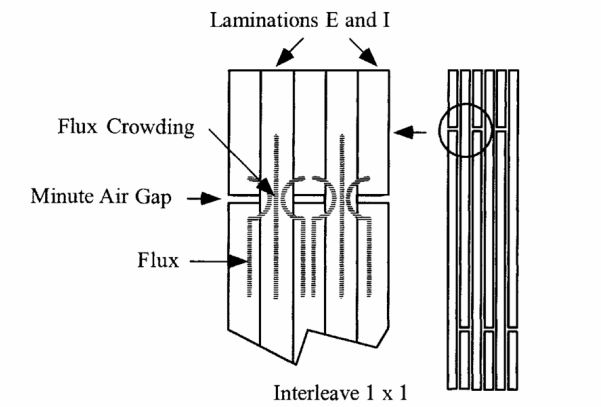

Figure 9: Core install

3.5 Equipment

- Winding machine
- power supply
- Voltage input
- Load text power
- Soldering
- Glue gun
- Gunting kacip
- Test pen
- multimeter

3.6 Calculate

```

clc;
clear;
close all;

% EI40 Iron Lamination----------------------------------------
Vp = 220*sqrt(2);                % Primary voltage [V]
Vs = 15*sqrt(2);                 % Secondary voltage [V]
P = 5;                           % Power [W]

% Calculate applied volt-second  ----------------------------
f = 50;                          % Frequency [Hz]
omega = 2 * pi * f;              % Angular velocity [rad/s]
t0 = 0;                          % Start time [s]
t1 = 1 / f / 2;                  % Half period time [s]
v1 = @(t) Vp * sin(omega * t);   % Sine wave function
lambda1 = integral (v1, t0, t1);% Applied volt-second[V-s]

% Calculate mean length per turn (MLT) ------------------------
Li = 13e-3;                      % Inner square side [m]
Lo = 29e-3;                      % Outer square side [m]
MLT = 2 * (Li + Lo);             % Mean length per turn [m]

% Calculate window area (WA) ----------------------------------
lm = (2*((Li)+(Lo)));            % Magnetic path length [m]
Ac = ((20e-3)*(13e-3));          % Cross sectional area [m^2]
WA = ((8e-3)*(21e-3));           % Window area [m^2]

% Calculate DeltaB
   ------------------------------------------------
rho = 1.724e-8;                  % Copper resistivity [Ohm-m]
```

```
Kfe = 0.002;                        % Core loss coefficient [W/(cm^3
    T^beta)]
beta = 2.6;                         % Core loss exponent
Ku = 0.5;                           % Winding fill factor
n = Vp / Vs;                        % Turn ratio n1 / n2
I1 = P / Vp;                        % Primary current [A]
I2 = P / Vs;                        % Secondary current [A]
Itot = I1 + I2 / n;                 % Total current [A]

% find DeltaB-------------------------------------------------
term1 = rho * lambda1^2 * Itot^2 / (2 * Ku);
term2 = MLT / (WA * Ac^3 * lm);
term3 = 1 / (beta * Kfe);
term4 = 1 / (beta + 2);
DeltaB = (term1 * term2 * term3)^term4;
if DeltaB > 1.5
  DeltaB = 1.5;
end

% Calculate primary and secondary turns ------------------------
n1 = lambda1 / (2 * DeltaB * Ac)        % Turn in
n2 = n1 / n                             % Turn out

% Power loss--------------------------------------------------
Pfe=(Kfe*((DeltaB)^2)*Ac*lm);           % Loss core
Pcu=(rho*(MLT)*((n1)^2)*((Itot)^2));    % Loss wire copper
Ptot=Pfe+Pcu                            % Total power loss
```

result:
n1 = 2.5394e+03
n2 = 173.1378
Ptot = 9.7452e-06

4 Experiment and Result

4.1 Experiment

About experiment it have difficult, but it not bad, because it run simple. transformer is hot and noise sounds. Why? Because from air gap and wire coil. It is caused by along air gap from to big coil copper. When 0W voltage output 22V. And then the 5W output voltage 14.3V . Is from power loss.
Power loss in the calculate 10_{μ}W. So it the difference a more between calculating and experiment.

4.2 Result

In result test coil input it have resistor 513Ω and output coil resistor 4Ω.
$n_1 = 2483 turn$
$n_2 = 210 turn$
And output voltage 15v AC.

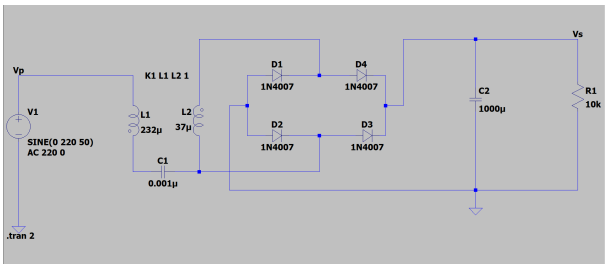

Figure 10: Circuit simulation

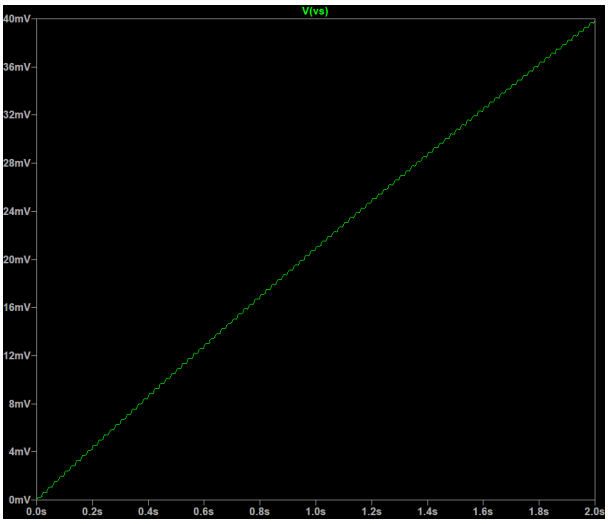

Figure 11: voltage simulation

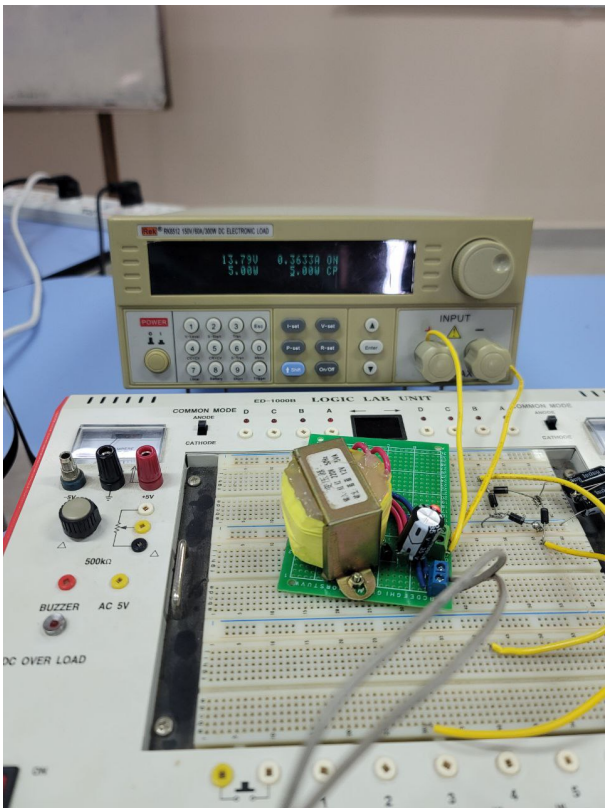

Figure 12: transformer and load testing (5w)

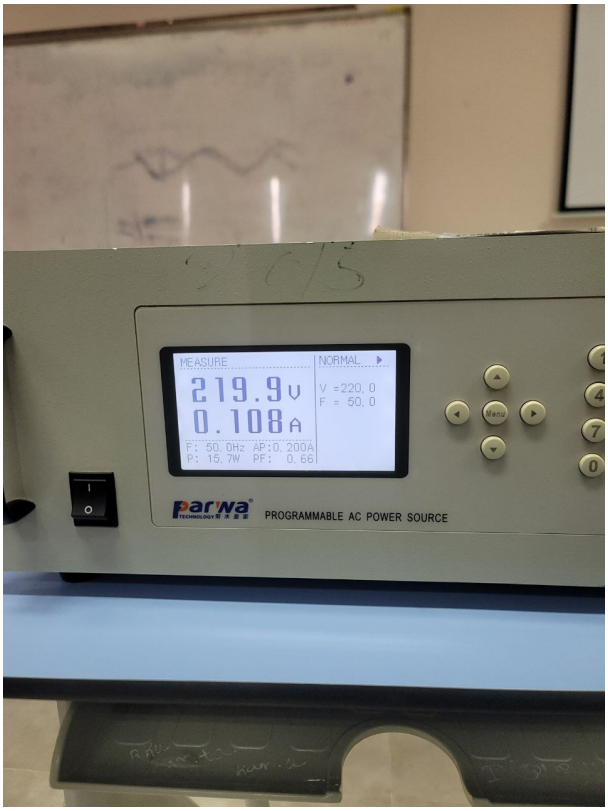

Figure 13: Power input

V_s	P_s	V_o	P_o
220	12.4	22.5	0
220	12.8	20.15	1
220	13.3	18.6	2
220	14	17.2	3
220	14.7	15.8	4
220	15.7	14.3	5
220	17.1	12.6	6
220	20.2	9.5	7

```
clc;
clear;
close all;

% Original data-----------------------------------------
x=[22.5, 20.15, 18.6, 17.2, 15.8, 14.3, 12.6, 9.5];
y=[0, 1, 2, 3, 4, 5, 6, 7];

figure;

% Create a continuous y range--------------------------------
yy = linspace(min(y), max(y), 500);
```

```
% Fit sine wave amplitude & offset based on x values---------
amp = (max(x) - min(x))/2;      % amplitude
offset = mean(x);               % vertical shift
freq = 1;                       % frequency (1 cycle across data)
phase = 0;                      % phase shift

% Generate sine wave-----------------------------------
xx = offset + amp * sin(2*pi*freq*yy/max(y) + phase);

% Plot original data----------------------------------------
plot(x,y,'ro','MarkerFaceColor','r'); hold on;

% Plot sine wave---------------------------------------
plot(x,y,'b-','LineWidth',1.5);

xlabel('Output voltage');
ylabel('Output power');
legend('Data points','Sine wave');
grid on;
```

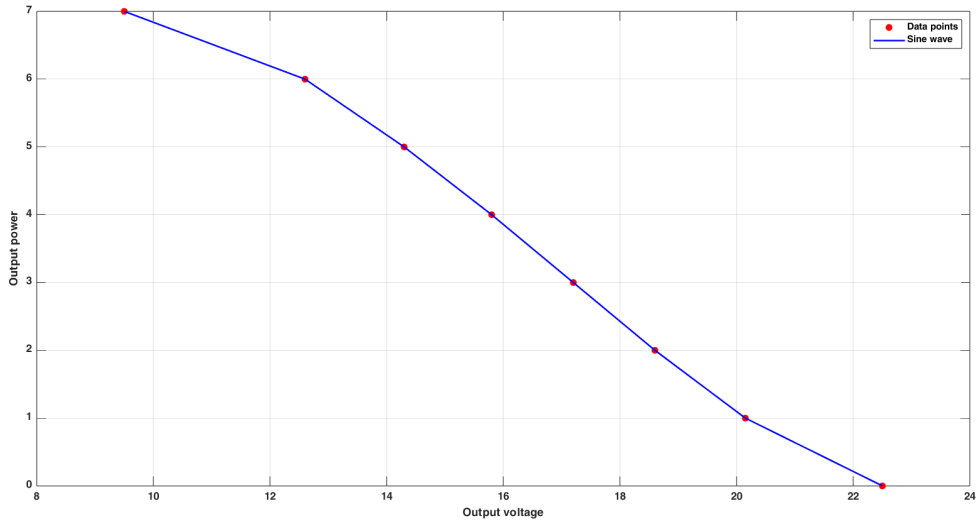

Figure 14: power out

5 Summary

In short, after practical testing, our transformer is acceptable. This means that we can use it with loads under 15v. After the first we need to be able and I will send use.
The results it have :

1. noise
2. sounds

Figure 15: Result

3. Hot
4. Capacitor high voltage
5. when we use 5W voltage 14v
6. Weight heavy
7. and big.

6 Reference

1. Part III. Magnetics, Mr Ny Virbora
2. Magnetic core, chapter 3, Copyright © 2004 by Marcel Dekker, Inc. All Rights Reserved.
3. Theory electrical and electronic , Mr chan sopheap