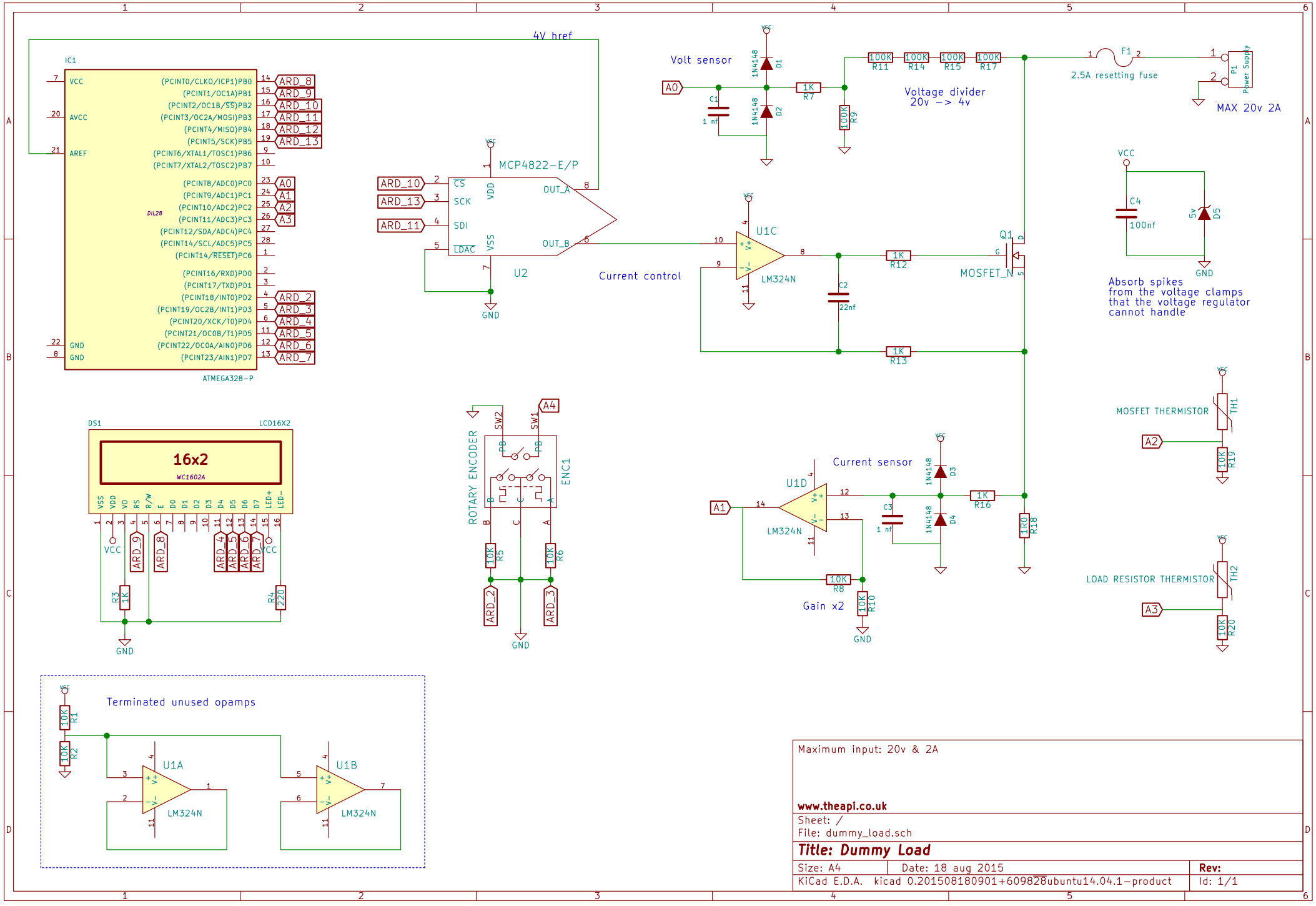
4V href
IC1
ATMEGA328-P
DIL28
MCP4822-E/P
U2
Current control
U1C
LM324N
Volt sensor
Voltage divider
20v -> 4v
2.5A resetting fuse
MAX 20v 2A
Absorb spikes
from the voltage clamps
that the voltage regulator
cannot handle
MOSFET_N
Current sensor
U1D
Gain x2
MOSFET THERMISTOR
LOAD RESISTOR THERMISTOR
ROTARY ENCODER
ENC1
DS1
LCD16X2
16x2
WC1602A
Terminated unused opamps
U1A
U1B
Maximum input: 20v & 2A
www.theapi.co.uk
Sheet: /
File: dummy_load.sch
Title: Dummy Load
Size: A4
Date: 18 aug 2015
Rev:
KiCad E.D.A. kicad 0.201508180901+609828ubuntu14.04.1-product
Id: 1/1