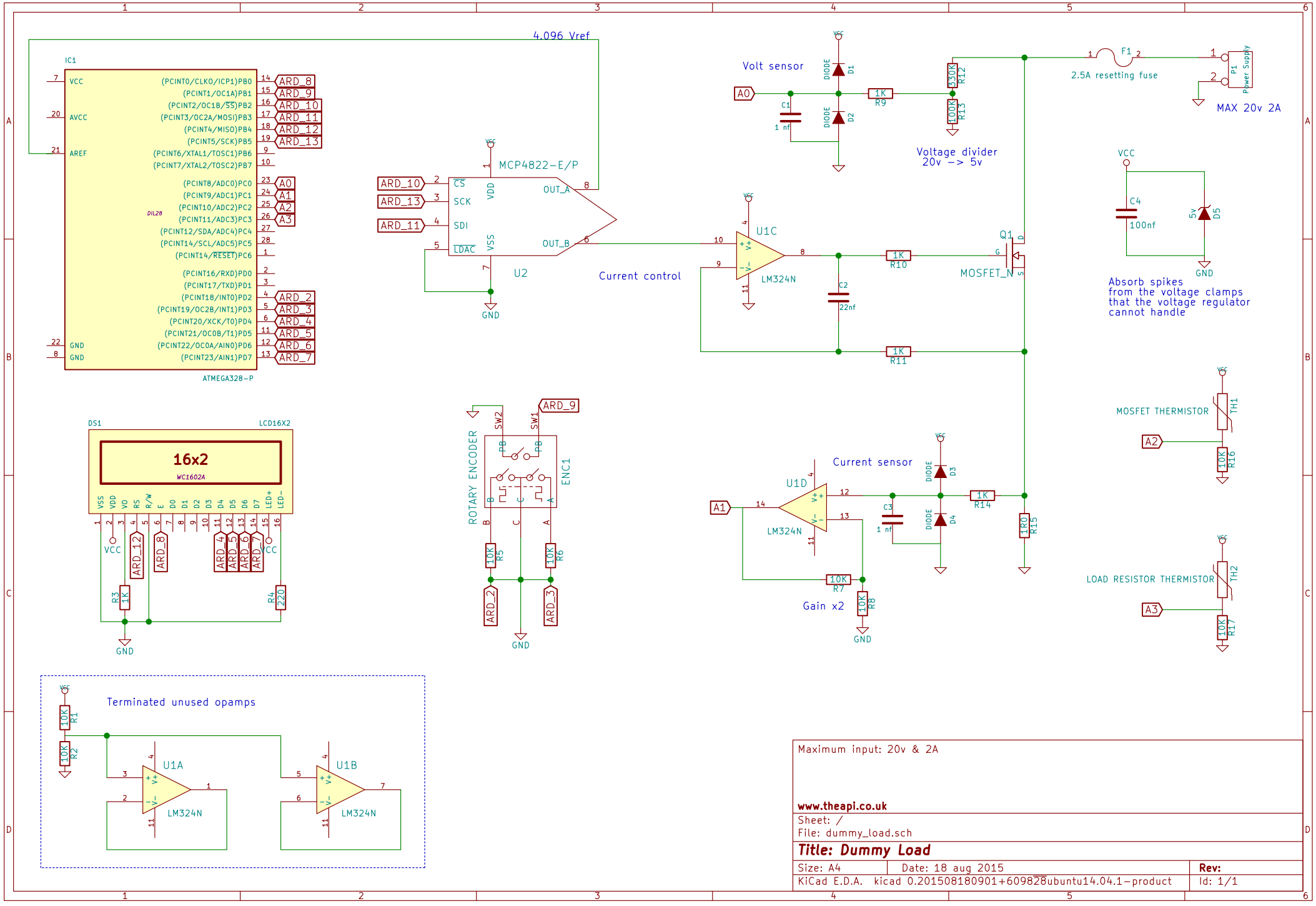
4.096 Vref
IC1
ATMEGA328-P
DIL28
MCP4822-E/P
U2
Current control
U1C
LM324N
Volt sensor
Voltage divider
20v -> 5v
F1
2.5A resetting fuse
P1
Power Supply
MAX 20v 2A
Q1
MOSFET_N
C4
100nf
Absorb spikes
from the voltage clamps
that the voltage regulator
cannot handle
DS1
LCD16X2
16x2
WC1602A
ROTARY ENCODER
ENC1
U1D
Current sensor
Gain x2
MOSFET THERMISTOR
LOAD RESISTOR THERMISTOR
Terminated unused opamps
U1A
U1B
Maximum input: 20v & 2A
www.theapi.co.uk
Sheet: /
File: dummy_load.sch
Title: Dummy Load
Size: A4
Date: 18 aug 2015
Rev:
KiCad E.D.A. kicad 0.201508180901+609828ubuntu14.04.1-product
Id: 1/1