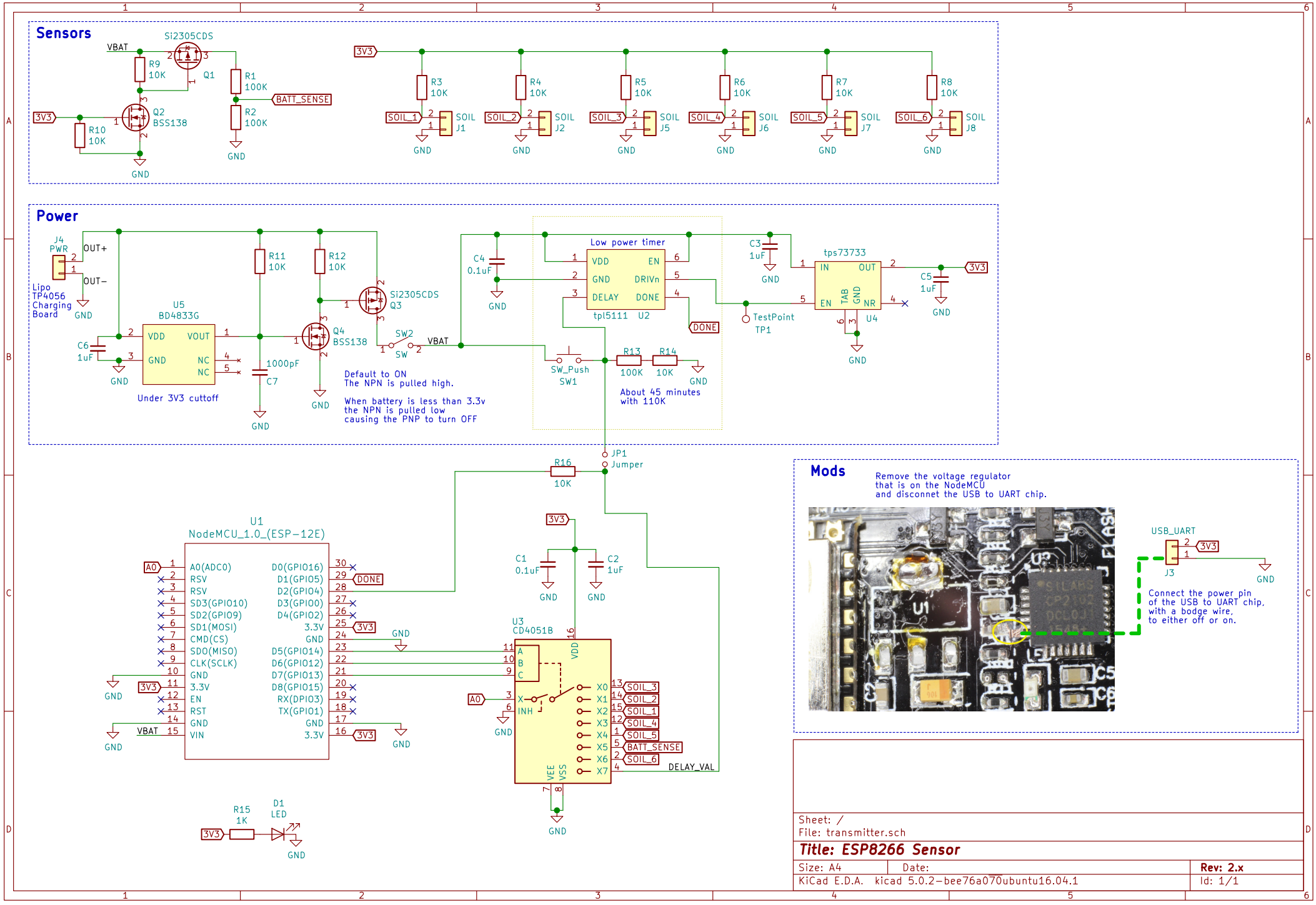
Sensors
Si2305CDS
VBAT
R9 10K
Q1
R1 100K
BATT_SENSE
R2 100K
3V3
R10 10K
Q2 BSS138
GND
R3 10K
R4 10K
R5 10K
R6 10K
R7 10K
R8 10K
SOIL_1
SOIL_2
SOIL_3
SOIL_4
SOIL_5
SOIL_6
SOIL J1
SOIL J2
SOIL J5
SOIL J6
SOIL J7
SOIL J8
Power
J4 PWR
OUT+
OUT−
Lipo TP4056 Charging Board
U5 BD4833G
VDD
VOUT
GND
NC
NC
C6 1uF
R11 10K
R12 10K
1000pF C7
Under 3V3 cuttoff
Si2305CDS Q3
Q4 BSS138
SW2 SW
VBAT
Default to ON
The NPN is pulled high.
When battery is less than 3.3v
the NPN is pulled low
causing the PNP to turn OFF
C4 0.1uF
Low power timer
VDD
GND
DELAY
EN
DRIVn
DONE
tpl5111 U2
DONE
SW_Push SW1
R13 100K
R14 10K
About 45 minutes
with 110K
C3 1uF
TestPoint TP1
tps73733
IN
OUT
EN
TAB GND
NR
U4
C5 1uF
JP1 Jumper
R16 10K
U1
NodeMCU_1.0_(ESP-12E)
A0(ADC0)
RSV
RSV
SD3(GPIO10)
SD2(GPIO9)
SD1(MOSI)
CMD(CS)
SDO(MISO)
CLK(SCLK)
GND
3.3V
EN
RST
GND
VIN
D0(GPIO16)
D1(GPIO5)
D2(GPIO4)
D3(GPIO0)
D4(GPIO2)
3.3V
GND
D5(GPIO14)
D6(GPIO12)
D7(GPIO13)
D8(GPIO15)
RX(DPIO3)
TX(GPIO1)
GND
3.3V
C1 0.1uF
C2 1uF
U3 CD4051B
A
B
C
X
INH
VDD
VEE
VSS
X0
X1
X2
X3
X4
X5
X6
X7
DELAY_VAL
R15 1K
D1 LED
Mods
Remove the voltage regulator
that is on the NodeMCU
and disconnet the USB to UART chip.
USB_UART
J3
Connect the power pin
of the USB to UART chip,
with a bodge wire,
to either off or on.
Sheet: /
File: transmitter.sch
Title: ESP8266 Sensor
Size: A4
Date:
Rev: 2.x
KiCad E.D.A. kicad 5.0.2-bee76a070ubuntu16.04.1
Id: 1/1