10

Feedback in Amplifiers

10.1 INTRODUCTION

The term *feedback* implies transfer of energy from the output of a system to its input. If a portion (or the whole) of the output signal of an amplifier is fed back and superimposed on the input signal, the performance of the amplifier changes significantly. The amplifier is then said to be a *feedback amplifier*.

Feedback can be of two types : negative feedback and positive feedback. When the feedback signal diminishes the magnitude of the input signal, the feedback is called *negative, inverse* or *degenerative feedback*. Negative feedback reduces the overall gain of the amplifier. If the feedback signal enhances the magnitude of the input signal, the feedback is referred to as *positive, direct* or *regenerative feedback*. The overall gain of the amplifier is increased by positive feedback.

Despite the reduction in the overall gain of the amplifier, negative feedback offers many advantages, and is therefore used extensively in electronic circuits. On the contrary, positive feedback causes an instability in the gain of the amplifier and distorts the input signal. Therefore, it is not generally used in amplifiers. It is used in oscillators and sometimes in narrowband amplifiers and radio receivers because it increases the signal power.

10.2 TRANSFER GAIN OF A FEEDBACK AMPLIFIER

Fig. 10.1 shows the block diagram of a feedback amplifier consisting of a basic or an internal amplifier and a feedback network. The transfer gain of the internal amplifier is $A = V_o / V_i$, where V_i is its input voltage and V_o the output voltage. The feedback network can contain passive elements like resistors inductors or capacitors and active elements like transistors. A portion $V_f = \beta V_o$ is extracted from the output voltage V_o and added to, or subtracted from, the externally applied input signal voltage V_s by the feedback network. The input voltage of the basic amplifier is thus $V_i = V_s \pm V_f$. The positive sign holds for positive feedback and the negative sign for negative feedback. The fraction $\beta = V_f / V_o$ is known as the *feedback fraction,* the *feedback ratio,* the *reverse transfer ratio* or the *reverse transmission factor*.

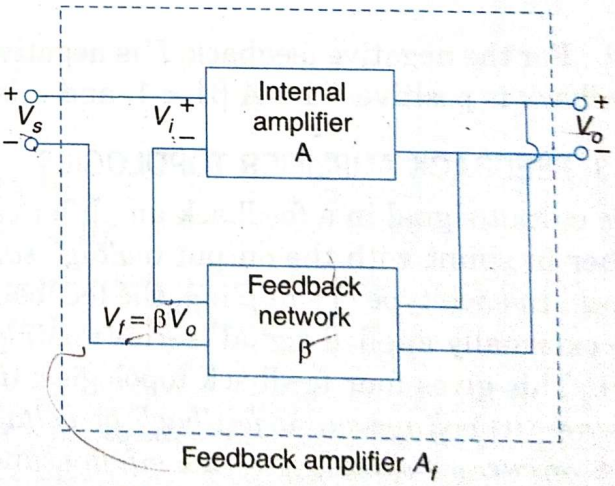

Fig. 10.1 Block diagram of a feedback amplifier.

The whole system in the dashed box in Fig. 10.1 constitutes the feedback amplifier. The *transfer gain* A_f of the feedback amplifier is the ratio of the output voltage V_o to the externally applied input signal voltage V_s, i.e.

$$A_f = \frac{V_o}{V_s} \tag{10.1}$$

If $V_i = V_s - V_f$, we have

$$V_o = AV_i = A(V_s - V_f). \tag{10.2}$$

Since $V_f = \beta V_o$, Eq. (10.2) gives

$$V_o(1 + A\beta) = AV_s \quad \text{or,} \quad A_f = \frac{V_o}{V_s} = \frac{A}{1 + A\beta} \tag{10.3}$$

In the absence of any feedback $\beta = 0$, and $A_f = A$. Thus A represents the transfer gain without feedback. The quantity $-A\beta$ is termed the *loop gain*, because it gives the product of the gains of the branches making up the loop. It is also called the *feedback factor*, the *return ratio* or the *loop transmission*.

The difference between unity and the loop gain, i.e. $(1 + A\beta)$ is referred to as the *return difference*. The gain A_f with feedback is sometimes called the *closed-loop gain*. The quantity A is the gain without feedback, but including the loading effect of the feedback network. A is known as the *open-loop gain*.

In Eq. (10.3), both A and β can be real (positive or negative) quantities or complex functions of frequency.

If $|1 + A\beta| > 1$, we have $|A_f| < |A|$, which characterises negative feedback. If $|1 + A\beta| < 1$, we obtain $|A_f| > |A|$, which gives positive feedback. If $|1 + A\beta| = 0$, $|A_f| = \infty$, implying that the amplifier gives an output signal even in the absence of an input signal; the amplifier then becomes an *oscillator*.

The feedback introduced into an amplifier is usually expressed in decibel (dB) by the relationship

$$F = \text{dB of feedback} = 20 \log_{10} \left| \frac{A_f}{A} \right| = 20 \log_{10} \left| \frac{1}{1 + A\beta} \right|. \tag{10.4}$$

For the negative feedback, F is negative since $|1 + A\beta| > 1$ for such a feedback. When the feedback is positive, $|1 + A\beta| < 1$, and F is positive.

10.3 FEEDBACK AMPLIFIER TOPOLOGIES

The output signal in a feedback amplifier can be sampled by connecting the feedback network either in shunt with the output (*voltage sampling*) or in series with the output (*current sampling*). In each type of sampling, the feedback signal can be returned to the input in series with the externally applied signal (series mixing), or in shunt with the external signal (shunt mixing). This gives four feedback topologies: (*i*) *voltage-series feedback* or *voltage sampling-series mixing*, (*ii*) *voltage-shunt feedback* or *voltage sampling-shunt mixing*, (*iii*) *current-series feedback* or *current sampling-series mixing*, and (*iv*) *current shunt feedback* or *current sampling-shunt mixing*.

O/P I/P

(*i*) Voltage-series Feedback

Fig. 10.2 shows schematically the voltage-series feedback configuration. The emitter follower circuit of Fig. 10.3 is an illustration of *voltage-series negative feedback*. In Fig. 10.3, the output voltage V_0 appearing across the load resistance R_L is totally returned to the input. Conse-

quently, the feedback ratio β is unity here. In Fig. 10.3 the emitter-base junction is forward biased through the resistance R_B. The capacitance C_{in} decouples the signal source from the supply V_{CC} and behaves as a short circuit for ac. The output voltage is the sampled signal. The sampled signal being a voltage, the feedback is voltage or shunt feedback. The feedback signal voltage is returned to the input in series with the external input signal voltage, so that we have series mixing. So the feedback in the emitter follower circuit is *voltage-series* or *voltage-voltage* or *shunt-series* feedback.

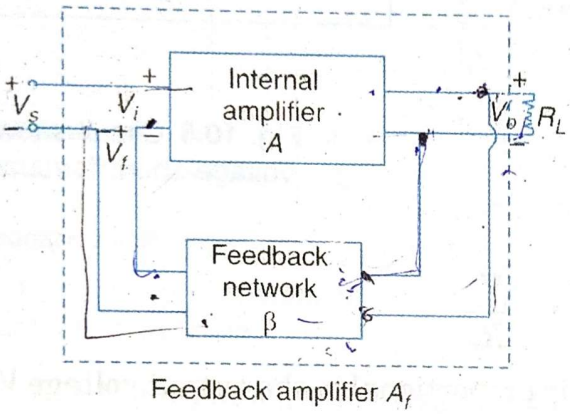

Fig. 10.2 Voltage-series feedback configuration.

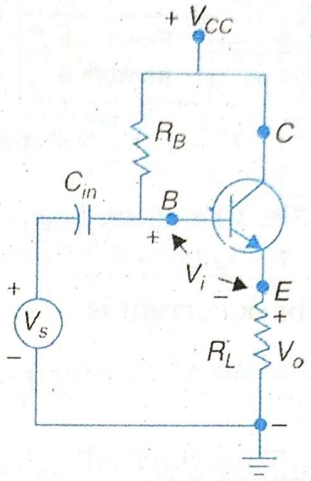

Fig. 10.3 An emitter follower circuit illustrating voltage-series negative feedback.

The input signal voltage to the transistor in Fig. 10.3 is $V_i = V_s - V_o$, where V_s is the externally applied input signal voltage. This shows that the feedback is negative. For negative feedback, $|1 + A\beta| > 1$. The overall voltage gain is

$$A_f = \frac{A}{1 + A\beta} \tag{10.5}$$

The gain A of the amplifier without feedback can be found by transferring the load resistance R_L from the emitter to the collector leg. Thus

$$A \approx \frac{h_{fe} R_L}{h_{ie}} \tag{10.6}$$

(see Sec 8.9). As β = 1 here, Eq. (10.5) gives

$$A_f \approx \frac{h_{fe} R_L}{h_{ie} + h_{fe} R_L}. \tag{10.7}$$

Equation (10.7) shows that the voltage gain is less than unity. This expression of the gain, obtained from the concept of feedback, agrees with Eq. (8.79) derived earlier.

(ii) Voltage-shunt Feedback

Fig. 10.4 depicts the block diagram of an amplifier with voltage-shunt feedback. An illustration of this type of feedback is given by the circuit of Fig. 10.5. Here the transistor is in the CE configuration and the resistor R_f provides the feedback from the collector to the base of the transistor. The capacitor C_i isolates the signal source from the supply V_{cc} and acts as a short circuit for ac. The output voltage V_o is much greater than the input voltage V_i and 180° out of phase with it. An increase of the input signal voltage V_s increases the current I_s. Consequently, both I_f and I_i will increase because $I_s = I_i + I_f$. The increase in I_i is less than that of I_s showing that the circuit provides a negative feedback.

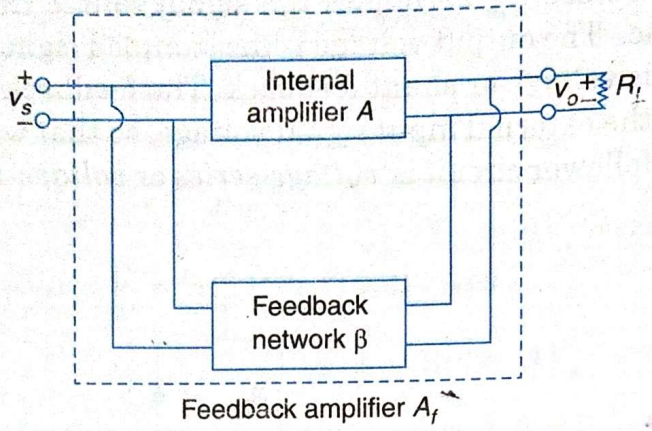

Fig. 10.4 Block diagram of voltage-shunt feedback.

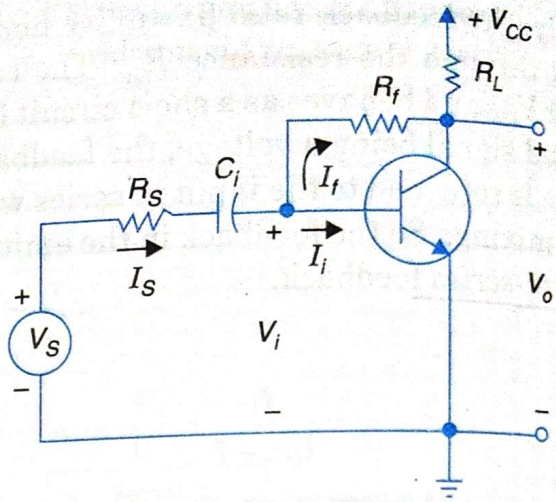

Fig. 10.5 Circuit showing voltage-shunt feedback.

The feedback current is

$$I_f = \frac{V_i - V_o}{R_f} \approx -\frac{V_o}{R_f} \tag{10.8}$$

since $V_o >> V_i$. Thus the feedback current I_f is proportional to the output voltage V_o showing that the feedback is voltage-shunt.

(iii) Current-series Feedback

A current series feedback amplifier is schematically shown in the block diagram of Fig. 10.6.

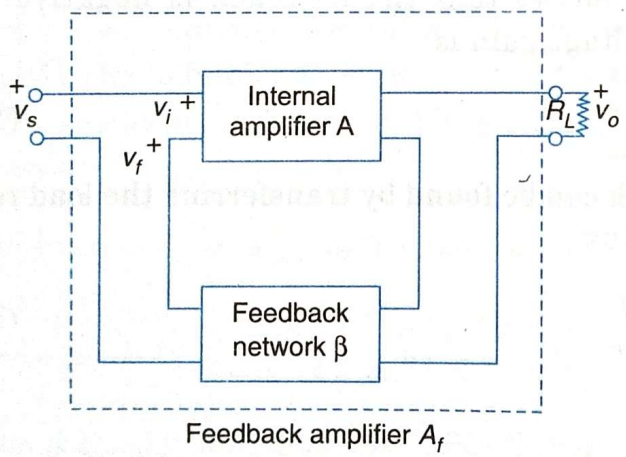

Fig. 10.6 Block diagram of current-series feedback amplifier

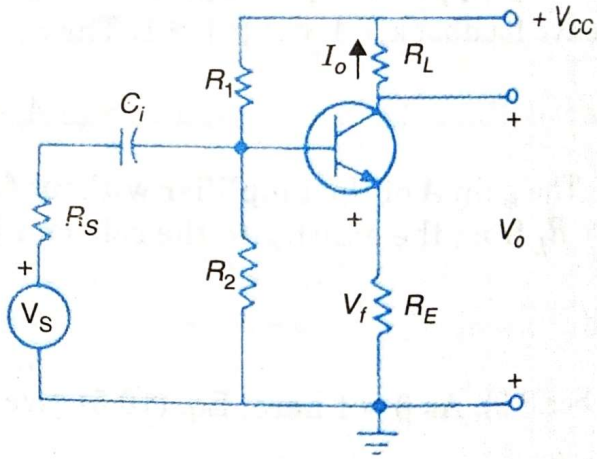

Fig. 10.7 A circuit illustrating current series feedback.

The circuit of such a feedback is shown in Fig. 10.7. Here the feedback voltage is the voltage V_f across the unbypassed emitter resistor R_E. Neglecting the base current, we have $V_f = -R_E I_o$, where I_o is the output collector current. The sampled signal is the current I_o and the feedback signal is the voltage V_f. Hence, the circuit is referred to as the current-series feedback. Following the arguments put forward for an emitter follower, we find that the feedback here is negative. Because of its negative feedback action, R_E is referred to as the *emitter degeneration resistance*.

(iv) Current-shunt Feedback

The block diagram of Fig. 10.8 depicts the current-shunt feedback, an example of which is provided by the circuit of Fig. 10.9. Here two transistors T_1 and T_2 are in cascade. The resistance

R_f connected between the emitter of T_2 and the base of T_1 gives the feedback path. The output voltage V_o' of the first stage is much larger than and 180° out of phase with the input voltage V_i. The voltage V_{e2} across R_{e2} is slightly less than V_o' and is in phase with it. So, V_{e2} is much larger than V_i and 180° out of phase with it.

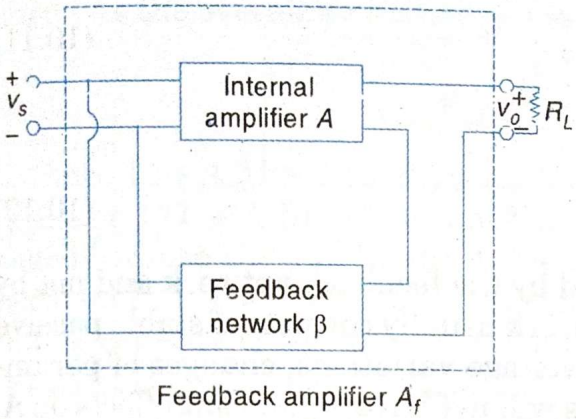

Fig. 10.8 Schematic representation of current-shunt feedback.

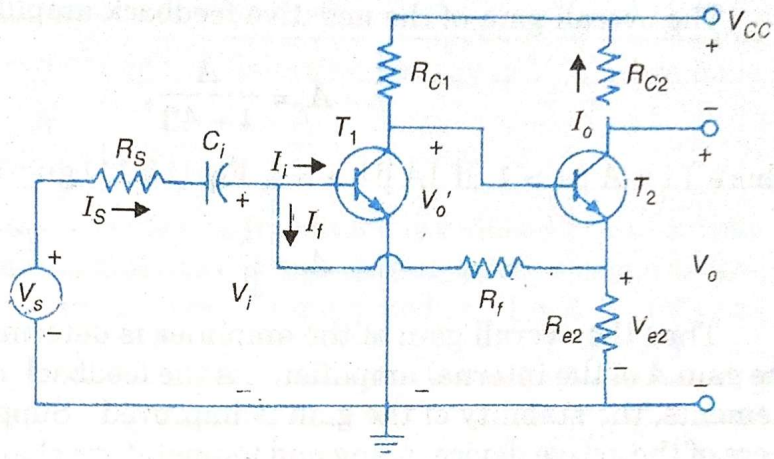

Fig. 10.9 A circuit showing current-shunt feedback.

An increase in the input signal voltage V_s is accompanied by a corresponding increase in I_s. Consequently, I_f and I_i will increase since $I_s = I_f + I_i$. Clearly, the increase in I_i is less than that of I_s manifesting negative feedback.

We have for the feedback current

$$I_f = \frac{V_i - V_{e2}}{R_f} \approx -\frac{V_{e2}}{R_f} \tag{10.9}$$

since $V_{e2} >> V_i$. Neglecting the base current of the transistor T_2 compared with its collector current I_o, we have $V_{e2} = (I_f - I_o)\, R_{e2}$. So, we get from Eq. (10.9)

$$I_f = \frac{(I_o - I_f)\, R_{e2}}{R_f}$$

or, $$I_f\,(R_f + R_{e2}) = I_o\, R_{e2} \quad \text{or,} \quad I_f = \frac{R_{e2}}{R_f + R_{e2}}\, I_o \tag{10.10}$$

The feedback current I_f being proportional to the output current I_o, the feedback here is *current-shunt* or *current-current* or *series-shunt*.

10.4 EFFECTS OF NEGATIVE FEEDBACK

Negative feedback introduces the following modifications of the amplifier characteristics:

(*i*) The gain is reduced and stabilized with respect to the variations in transistor parameters like h_{fe}.

(*ii*) The nonlinear distortion is less so that the signal handling capacity of the amplifier increases.

(*iii*) The input impedance can be changed by suitably combining the feedback signal with the externally applied input signal. The output impedance of the amplifier can also be changed by suitably extracting the feedback signal from the output.

(*iv*) The bandwidth of the amplifier increases and the frequency distortion becomes less.

(*v*) The phase distortion is reduced.

(*vi*) The noise level is lowered.

These features of negative feedback are discussed below.

(*i*) Stability of Gain

The overall gain of the negative feedback amplifier is

$$A_f = \frac{A}{1 + A\beta}, \tag{10.11}$$

where $|1 + A\beta| > 1$. If $|A\beta| >> 1$, Eq. (10.11) gives

$$A_f \approx \frac{1}{\beta}. \tag{10.12}$$

Thus the overall gain of the amplifier is determined by the feedback network and not by the gain A of the internal amplifier. As the feedback network usually consists of stable passive elements, the stability of the gain is improved. Supply voltage variations, changes of parameters of the active device, aging and temperature changes will not have significant effects on A_f although they can have marked effects on A.

If the loop gain in a negative feedback amplifier is not large, the stability of the gain can be found by differentiating Eq. (10.11) with respect to A. Thus we get

$$\frac{d\,A_f}{A_f} = \frac{1}{1 + A\beta}\frac{dA}{A}. \tag{10.13}$$

The ratio of the fractional change in the overall gain to the fractional change in the gain of the internal amplifier gives the *sensitivity* S of the transfer gain to changes in the internal amplifier gain. Thus

$$S = \left(\frac{dA_f}{A_f}\right)\Big/\left(\frac{dA}{A}\right) = \frac{1}{1 + A\beta}. \tag{10.14}$$

The *desensitivity* D is given by

$$D = \frac{1}{S} = 1 + A\beta \tag{10.15}$$

Equations (10.13) and (10.15) give

$$\frac{dA_f}{A_f} = \frac{1}{D}\left(\frac{dA}{A}\right). \tag{10.16}$$

As $|D| > 1$ for negative feedback, the percentage change in A_f is less than that in A. The overall gain stability is thus better.

(*ii*) Decrease in Nonlinear Distortion

The nonlinearity in the transfer characteristic of the amplifier active device distorts the output signal when a large-amplitude signal is applied to the amplifier input. Let V_{os} and V_D be the signal component of the output voltage and the distortion output voltage, respectively. For simplicity, we assume here that the input signal voltage is sinusoidal and that the distortion voltage is the second harmonic.

If V_s is the applied input signal voltage, we have $V_{os} = AV_s$ in the absence of feedback. The voltage V_D is introduced by the nonlinearity of the active device; it can be assumed to arise

from an effective distortion voltage V_D/A applied at the input of a distortionless amplifier of gain A.

In the presence of negative feedback, both V_{os} and V_D will diminish. To keep V_{os} constant at its previous value, the input signal amplitude is increased from V_s to $V_s' = V_s(1 + A\beta)$. As the output voltage remains the same, the input voltage of the internal amplifier is $V_i = V_s'$.

When negative feedback is applied, let V_{Df} be the distortion component of the output voltage. As the overall gain is $A/(1 + A\beta)$ and the input distortion voltage is V_D/A, we have

$$V_{Df} = \frac{V_D}{A} \times \frac{A}{1 + A\beta} = \frac{V_D}{1 + A\beta} \tag{10.17}$$

Since $|1 + A\beta| > 1$ for negative feedback, the distortion voltage is reduced at the output by a factor $1/(1 + A\beta)$. Note that the signal component of the output voltage remains unchanged because the amplitude of the applied input signal is enhanced by $(1 + A\beta)$; this enhancement can be achieved by using a preamplifier. Clearly, the dynamic range or the signal handling capacity of the amplifier is increased.

(iii) Effect on Input and Output Impedances

(a) **Input impedance:** In the *series-mixing* feedback circuit of Fig. 10.10, the input impedance of the internal amplifier is

$$Z_i = \frac{V_i}{I_i} \tag{10.18}$$

The input impedance of the feedback amplifier is

$$Z_{if} = \frac{V_s}{I_i}. \tag{10.19}$$

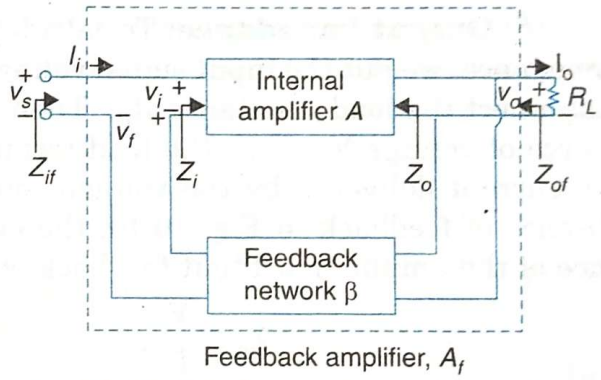

Fig. 10.10 Calculation of impedances for voltage-series feedback.

The externally applied input signal voltage is

$$V_s = V_i + V_f = V_i + \beta V_o = V_i + A\beta V_i \tag{10.20}$$

since $V_o = AV_i$, where A is the voltage gain of the internal amplifier including the load resistance R_L. Equation (10.20) yields

$$V_s = V_i(1 + A\beta) \tag{10.21}$$

So, Eq. (10.19) gives

$$Z_{if} = \frac{V_i(1 + A\beta)}{I_i} = Z_i(1 + A\beta) \tag{10.22}$$

using Eq. (10.18). Negative feedback implies $|1 + A\beta| > 1$. Hence, we find from Eq. (10.22) that the input impedance of the amplifier increases for series-mixing negative feedback.

Consider now the *shunt-mixing* feedback of Fig. 10.11. Here, the current gain of the internal amplifier is $A = I_0/I_i$. The input impedance of the internal amplifier is

$$Z_i = \frac{V_s}{I_i} \tag{10.23}$$

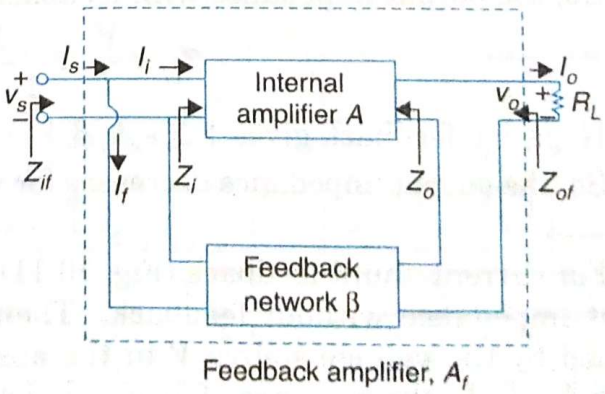

Fig. 10.11 Calculation of impedances for current-shunt feedback.

For the feedback amplifier, the input impedance is

$$Z_{if} = \frac{V_s}{I_s}. \tag{10.24}$$

From Kirchhoff's current law, we have

$$I_s = I_i + I_f \tag{10.25}$$

where I_f is the feedback current. If β is the reverse transmission factor,

$$I_f = \beta I_o = A \beta I_i, \tag{10.26}$$

since $I_o = AI_i$, where A is the current gain of the internal amplifier including the load resistance R_L. From Eqs. (10.25) and (10.26), we obtain

$$I_s = I_i (1 + A \beta). \tag{10.27}$$

Equation (10.24) gives

$$Z_{if} = \frac{V_s}{I_i (1 + A\beta)} = \frac{Z_i}{1 + A\beta}, \tag{10.28}$$

where Eq. (10.23) is used. As $| 1 + A \beta | > 1$ for negative feedback, the input impedance of a negative feedback amplifier with shunt mixing is less than that in the absence of feedback.

(*b*) **Output impedance:** To calculate the output impedance, we put the input signal voltage to zero and disconnect the load resistance R_L. Then we connect a source of voltage V across the load terminals. If I' is the current delivered by the voltage source V in the absence of feedback in Fig. 10.10, the output impedance of the amplifier without feedback is

$$Z_0 = \frac{V}{I'}. \tag{10.29}$$

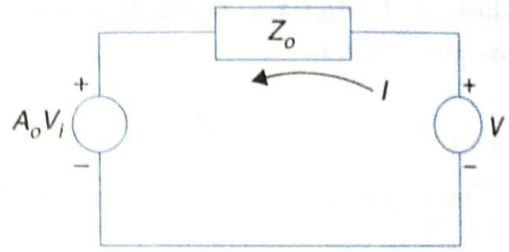

Fig. 10.12 Equivalent output circuit for the calculation of the output impedance for voltage-series feedback.

When feedback is present, the input voltage of the internal amplifier is $V_i = -V_f$, since $V_s = 0$. As $V_f = \beta V$, we have

$$V_i = -\beta V. \tag{10.30}$$

If A_o is the voltage gain of the internal amplifier when the output is an open-circuit, the open-circuit output voltage becomes $A_o V_i = -A_o \beta V$. The equivalent circuit at the output is as shown in Fig. 10.12. The current supplied by the source V is

$$I = \frac{V - A_o V_i}{Z_o} = \frac{V + A_o \beta V}{Z_o}.$$

So, the output impedance with feedback is

$$Z_{of} = \frac{V}{I} = \frac{Z_o}{1 + A_o\beta} \tag{10.31}$$

Negative feedback gives $| 1 + A_o \beta | > 1$.

So, the output impedance decreases for voltage-series feedback.

For current-shunt feedback (Fig. 10.11), let Z_o be the output impedance without feedback. Then the current supplied by the voltage source V in the absence of feedback is V/Z_o, In the presence of feedback, let I be the current delivered by the source V. With $I_s = 0$, $I_i = -I_f = \beta I$, since the feedback current is $I_f = -\beta I$.

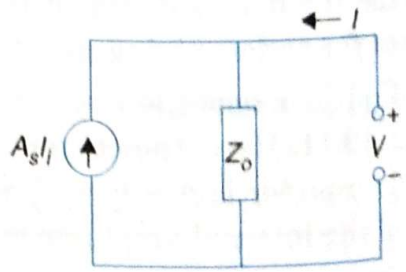

Fig. 10.13 Equivalent output circuit for the calculation of the output impedance for current-shunt feedback.

If A_s is current gain of the amplifier without feedback when the load terminals are short circuited, the short-circuit output current is $A_s I_i = A_s \beta I$. The equivalent output circuit is then as shown in Fig. 10.13. The current I supplied by the source V is

$$I = \frac{V}{Z_o} - A_s I_i = \frac{V}{Z_o} - A_s \beta I \quad \text{or,} \quad I(1 + A_s \beta) = \frac{V}{Z_o}.$$

So, the output impedance with feedback is

$$Z_{of} = \frac{V}{I} = Z_o (1 + A_s \beta) \tag{10.32}$$

Since $|1 + A_s \beta| > 1$ for negative feedback, the output impedance for current-shunt feedback is greater than that without feedback.

(iv) Reduction of Frequency Distortion

In Sec. 9.3, we have found that the low-frequency gain of one stage of an *RC*-coupled amplifier is

$$A_l = \frac{A_m}{1 - j(f_l / f)}, \tag{10.33}$$

where A_m is the mid-frequency gain and f_l is the lower half-power frequency. The high-frequency gain is

$$A_h = \frac{A_m}{1 + j(f / f_h)}, \tag{10.34}$$

f_h being the upper half-power frequency.

With feedback, the overall gains at low and high frequencies are

$$A_{lf} = \frac{A_l}{1 + A_l \beta} \tag{10.35}$$

and

$$A_{hf} = \frac{A_h}{1 + A_h \beta} \tag{10.36}$$

From Eqs. (10.35) and (10.33), we obtain

$$A_{lf} = \frac{A_m}{1 + A_m \beta - j(f_l / f)} = \frac{A_{mf}}{1 - j(f_{lf} / f)}, \tag{10.37}$$

where $A_{mf} = A_m / (1 + A_m \beta)$ is the mid-frequency gain with feedback, and $f_{lf} = f_l / (1 + A_m \beta)$ is the lower half-power frequency in the presence of feedback. Negative feedback implies $|1 + A_m \beta| > 1$, so that $f_{lf} < f_l$.

In a similar fashion, one can show from Eqs. (10.36) and (10.34)

$$A_{hf} = \frac{A_{mf}}{1 + j(f / f_{hf})} \tag{10.38}$$

where $f_{hf} = f_h (1 + A_m \beta)$ is the upper half-power frequency in the presence of negative feedback. Obviously, $f_{hf} > f_h$.

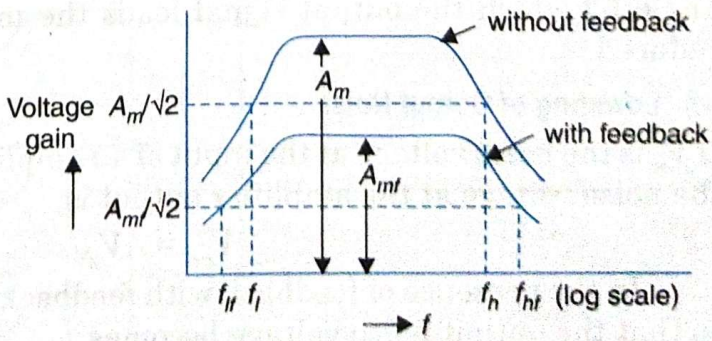

Fig. 10.14 Magnitude of voltage gain versus frequency for one stage of an *RC*-coupled amplifier with and without feedback.

We thus find that negative feedback decreases the lower half-power frequency and increases the upper half-power frequency. The difference between the two half-power frequencies, *i.e.* the bandwidth of the amplifier is consequently enhanced, and so the frequency distortion is reduced.

The plot of the magnitude of the gain with frequency of an *RC*-coupled amplifier in the presence and in the absence of feedback is depicted in Fig. 10.14.

(v) Decrease of Phase Distortion

When the load or the coupling impedance of an amplifier contains a reactive part, the gain of the amplifier is a complex quantity with a magnitude and a phase angle. So, the gain A of the amplifier without feedback can be written as

$$A = |A| \angle\theta. \tag{10.39}$$

With feedback, the gain is

$$A_f = \frac{A}{1 + A\beta}. \tag{10.40}$$

The feedback ratio β can be real or a complex quantity. Taking β to be real for simplicity, we obtain

$$A_f = \frac{|A|\angle\theta}{1+\beta|A|\angle\theta} = \frac{|A|\angle\theta}{1+\beta|A|(\cos\theta + j\sin\theta)}$$

$$= \frac{|A|\angle\theta}{(1+\beta|A|\cos\theta) + j\beta|A|\sin\theta}$$

$$= \frac{|A|\angle\theta}{|B|\angle\phi} \tag{10.41}$$

where $$|B| = \sqrt{(1+\beta|A|\cos\theta)^2 + (\beta|A|\sin\theta)^2} \tag{10.42}$$

and $$\phi = \tan^{-1}\frac{\beta|A|\sin\theta}{1+\beta|A|\cos\theta} \tag{10.43}$$

Writing

$$A_f = |A_f| \angle\theta_f \tag{10.44}$$

we obtain from Eq. (10.41)

$$|A_f| = \frac{|A|}{|B|} \tag{10.45}$$

and $$\theta_f = \theta - \phi. \tag{10.46}$$

Clearly, negative feedback decreases the phase angle of the gain by ϕ. Since the phase angle by which the output signal leads the input signal diminishes, the phase distortion is reduced.

(vi) Lowering of Output Noise

If V_n is the noise voltage at the input of an amplifier of voltage gain A in the absence of feedback, the noise voltage at the amplifier output is

$$V_{on} = AV_n. \tag{10.47}$$

In the presence of feedback with feedback fraction β, the gain reduces to $A_f = A / (1 + A\beta)$, so that the output noise voltage becomes

$$V_{onf} = \frac{AV_n}{1+A\beta} = \frac{V_{on}}{1+A\beta} \tag{10.48}$$

For negative feedback $|1 + A\beta| > 1$. Therefore, $V_{onf} < V_{on}$. Thus the output noise level is reduced. Note that the signal-to-noise ratio at the amplifier output is not improved since the negative feedback reduces the signal as well as the noise by the same factor.

10.5 REGULATED POWER SUPPLY

A regulated power supply gives a dc output voltage that remains substantially constant even when the ac supply voltage or the dc load current changes. The system contains (*i*) a rectifier with filter, and (*ii*) a voltage regulator, as shown in the block diagram of Fig. 10.15.

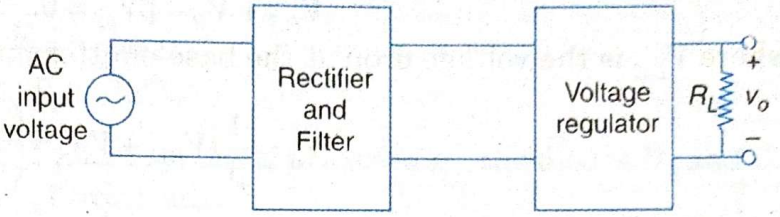

Fig. 10.15 Block diagram of a regulated power supply.

The rectifier transforms the input alternating current (or voltage) into a direct current (or voltage). The output of the rectifier contains the fluctuating components of current (or voltage), called the *ripple*. The filter following the rectifier stage smoothens out the ripples. The details of the rectifier and the filter action have been discussed in Secs. 6.3 through 6.6.

The output from the filter can vary with the changes in the ac supply voltage or the load resistance. The voltage regulator tends to eliminate this fluctuation. The principle of a regulator circuit is explained with the help of the diagram of Fig. 10.16, which is known as a *series voltage regulator*. A fraction βV_o of the output voltage V_o of the regulator is compared with a fixed reference voltage V_R appearing across the Zener diode Z. By adjusting the potentiometer P, βV_o is made nearly equal to V_R. The voltage difference $(\beta V_o - V_R)$ is amplified by the amplifier comprising the transistor T_1 and the load resistance R_1. The amplified voltage is applied to the base of the transistor T_2, called the *pass transistor*. If the output voltage V_o exceeds the desired value, βV_0 becomes larger than V_R and drives the base voltage of the transistor T_1 to a more positive value. Consequently, the collector current of T_1 increases, thereby enhancing the voltage drop across R_1. This reduces the forward biasing of the base-emitter junction of T_2. Hence the emitter current I of T_2 decreases. Consequently, the load current and hence the output voltage V_0 decreases. Thus a *negative feedback* occurs: any change in V_o is countered by a change in the current I, causing V_o to remain more or less steady. The capacitor C bypasses the high-frequency components of the output voltage, thus further improving the constancy of the output voltage. The percentage regulation of a regulated power supply, also called the *stabilised power supply*, is much less than that of a simple rectifier. This means that the internal resistance R_o in the equivalent circuit of Fig 6.9 is very small, (less than one ohm) the system behaving almost like an ideal voltage source.

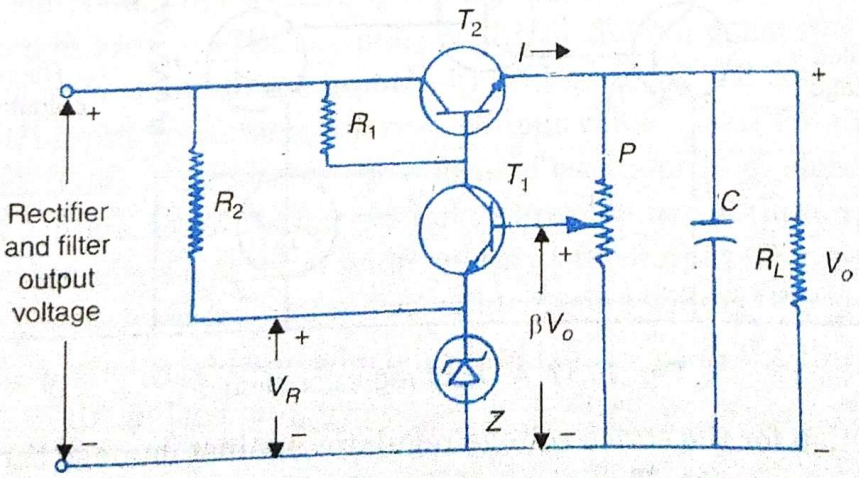

Fig. 10.16 A series voltage regulator using transistors and a Zener diode.

Let R_3 and R_4 be the resistances of the upper and the lower portions of the potentiometer P, respectively, with respect to the slider contact. Then $\beta = R_4 / (R_3 + R_4)$. Applying Kirchhoff's voltage law in the loop formed by the base-emitter junction of the transistor T_1, the Zener diode Z, and R_4, we obtain

$$V_{BE} + V_R - \beta V_o = 0,$$

where V_{BE} is the voltage drop at the base-emitter junction of T_1. Thus

$$V_o = \frac{1}{\beta}(V_{BE} + V_R) = \left(1 + \frac{R_3}{R_4}\right)(V_{BE} + V_R).$$

Clearly, V_o can be varied by varying R_3 and R_4, *i.e.* by changing the position of the slider of the potentiometer P.

In the *shunt-type regulator* shown in Fig 10.17, the regulating transistor is in shunt with the output terminals. If the output voltage V_o increases, the base-emitter junction of the transistor T_1 becomes more forward biased, so that its collector current increases. This collector current is the base current for the transistor T_2. An increase of base current of T_2 raises its collector current which is an amplified version of the collector current of T_1. The collector current of T_2 is the base current of the transistor T_3. An enhancement of the base current of T_3 increases its collector current which is a still further amplified form of its input current. An increase of the voltage V_o thus causes an increase of the collector current of T_3, increasing thereby the voltage drop across the resistance R. The circuit is thus self-correcting, the increased drop across R reducing the voltage V_o which is thus stabilized. The transistor T_3 has to handle a large collector current. So, it must be a power transistor.

Series versus shunt regulators: In either version, energy is lost in the regulating element. At no load, the regulating element of the series type has a small loss, whereas that of the shunt type has a large loss. Thus the series regulator is more efficient. The shunt regulator provides a protection for the regulating transistor against any accidental overload or short circuit since the situations will only decrease or eliminate the operating transistor voltages. In a series regulator, an overload condition causes a large current through the pass transistor which may be damaged.

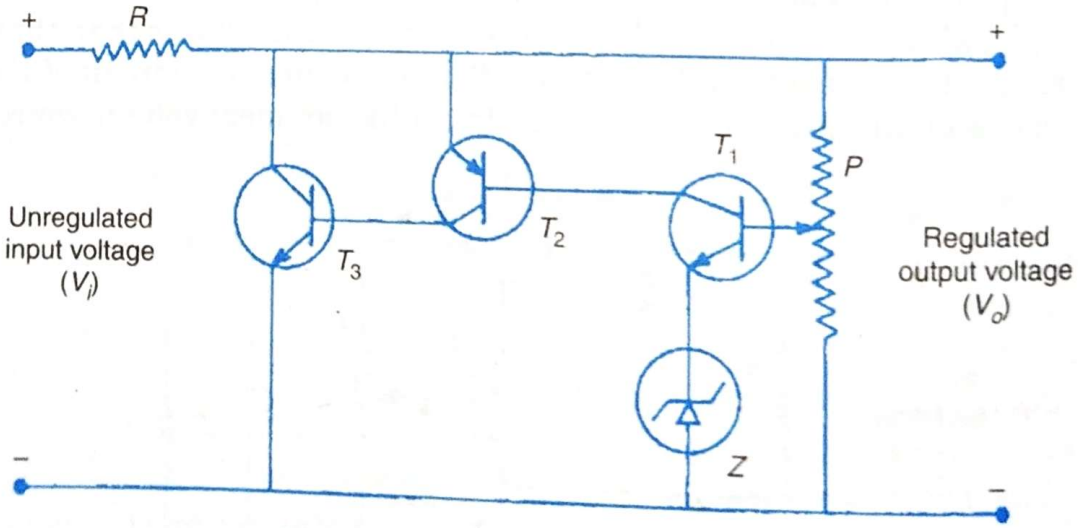

Fig. 10.17 A shunt regulator circuit.

A simple protection for the series voltage regulator against damage through overload is to use a fuse at the regulator input. The circuit of Fig. 10.16 can also be modified as in Fig. 10.17A

to obtain an automatic overload protection. The diodes D_1 and D_2 in Fig. 10.17A do not conduct till the voltage drop across the sensing resistor R_s exceeds the sum of their cuttin voltages $V_{\gamma 1}$ and $V_{\gamma 2}$. So, the emitter current I_{E2} of the pass transistor T_2 can increase only up to a maximum value

$$I_m = \frac{V_{\gamma 1} + V_{\gamma 2} - V_{BE2}}{R_s}$$

where V_{BE2} is the base-emitter voltage of T_2. When I_{E2} tends to exceed I_m, the diodes D_1 and D_2 conduct to protect the pass transistor against overloads.

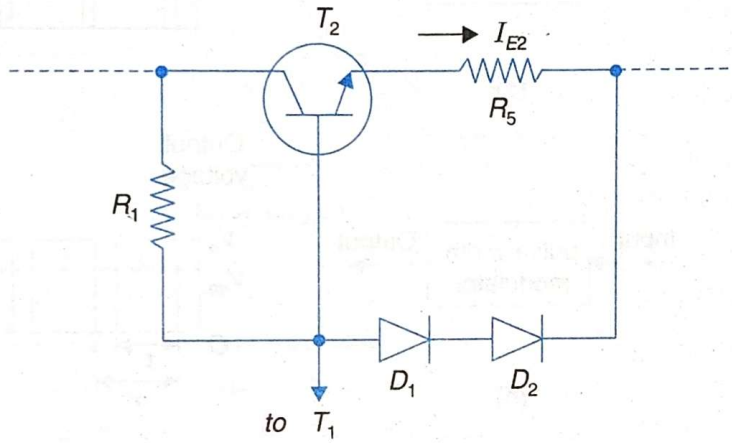

Fig. 10.17A Modification of the series regulator circuit for automatic protection against overloads.

Since semiconductor devices are low-voltage devices, the power supplies built from these devices provide a low dc voltage, up to a few tens of volt. These power supplies can be used in appliances in place of conventional batteries. Hence, they are called *battery eliminators*.

Switching Regulators. A disadvantage of the series and shunt regulators described above is that the control element in the circuit dissipates a large power. So the efficiency, i.e., the ratio of the load power to the total input power is rather low. As the control element like a pass transistor operates in its active region, the power dissipation in it is considerable at large load currents. For greater efficiency, the switching regulator is often used. Here, the control element is switched on and off rapidly. As the operation swings between saturation and cutoff very quickly, a low power consumption occurs in the device.

The essential component of a switching regulator is a *pulse-width modulator*, the function of which is illustrated in Fig. 10.17B. The pulse-width modulator generates a train of rectangular pulses of widths proportional to the input voltage. Figure 10.17B shows the pulse output of the device for a small input dc voltage, a large dc input voltage, and for a ramp input voltage. The pulse-width modulator incorporates some form of oscillator to produce the desired pulses. For a small dc input voltage, a train of narrow pulses are obtained at the output [Fig. 10.17B(*a*)]. A large dc input voltage gives a train of wide pulses at the output [Fig. 10.17B(*b*)], whereas a ramp input voltage generates a train of pulses of increasing widths [Fig. 10.17B(*c*)].

The ratio of the period (τ) during which a pulse is present to the total pulse period (T) is called the *duty cycle* of the pulse train, i.e.,

$$\text{duty cycle} = \frac{\tau}{T}.$$

The dc or the average voltage (V_{dc}) of a pulse train is proportional to the duty cycle, since

$$V_{dc} = V_P \left(\frac{\tau}{T}\right)$$

where V_P is the peak pulse voltage. It is assumed here that the pulses swing between 0 volt and V_P volt.

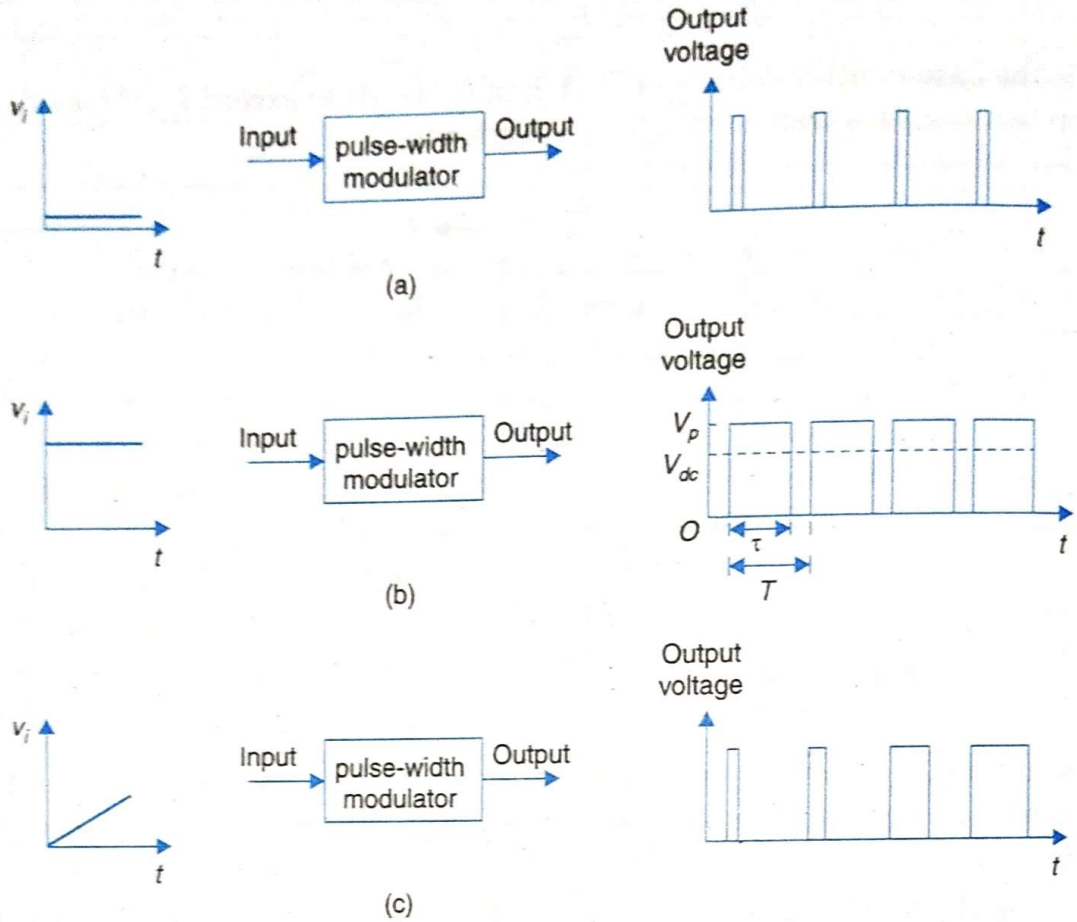

Fig. 10.17B Function of a pulse-width modulator for (*a*) a small dc input voltage, (*b*) a large dc input voltage, and (*c*) a ramp input voltage.

In a *switching regulator*, a pulse-width modulator is used to create a pulse train whose duty cycle is automatically adjusted for the required average value of the pulse voltage. The basic circuit is depicted in Fig. 10.17C. The output of the pulse-width modulator drives the base of the pass transistor T_2. For a high drive pulse, T_2 is saturated so that the current flowing through it is a maximum. When the drive pulse is low, T_2 is cutoff, and no current flows. Consequently, the current through T_2 is a series of pulses having the same duty cycle as the output of the modulator. The Zener diode Z gives a reference voltage, V_R which the OP AMP* compares with the feedback voltage βV_o. When the load voltage V_o tends to decrease, the OP AMP output voltage increases. So, a higher voltage is applied to the input of the pulse-width modulator, which hence gives out a pulse train with a higher duty cycle. Thus, the pulse train switches T_2 on and off with a larger duty cycle, thereby enhancing the current through T_2. This enhanced current increases the load voltage V_o to correct for its initial decrease.

The series inductance L and the shunt capacitance C in Fig. 10.17C constitute a low-pass filter which recovers the dc voltage of the pulse train applied to its input by T_2. The fundamental frequency of the pulse train and its harmonics are absent at the filter output. The negative voltage transient produced by the inductance when T_2 is turned off, is suppressed by diode D_1.

*For a discussion of OP AMP, see chapter 14.

It is termed a *catcher diode* or a *free-wheeling diode*. Modern switching regulators operate at frequencies in the kHz region, usually less than 100 kHz. Such high frequencies are preferred since the *LC* fitter components are then smaller. But high-frequency switching of large currents generates high magnetic fields which induce noise voltages in the conductors in the vicinity. This electromagnetic interference is reduced by proper shielding. Another limitation is the inability of the pass transistor to turn on and off at high switching frequencies. Consequently, modern regulators employ power MOSFETs instead of bipolar transistors since the power MOSFETs are superior in switching large load currents at high frequencies. (For a discussion on power MOSFETs, refer to Sec. 13.15). A power supply containing a switching regulator is called a switching mode power supply (SMPS).

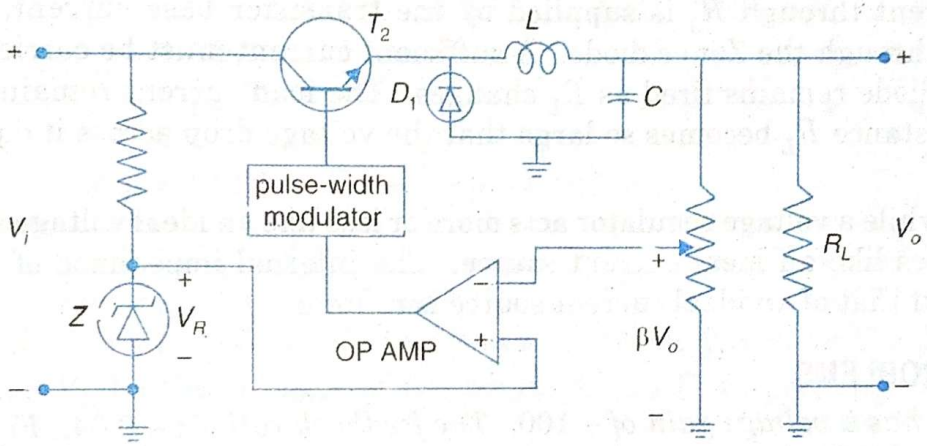

Fig. 10.17C A basic switching regulator circuit.

10.6 CURRENT REGULATOR

A voltage regulator provides a constant dc output voltage. In some applications a constant current is required, and the circuit that gives a constant dc output current irrespective of the load resistance, is referred to as a *current regulator*.

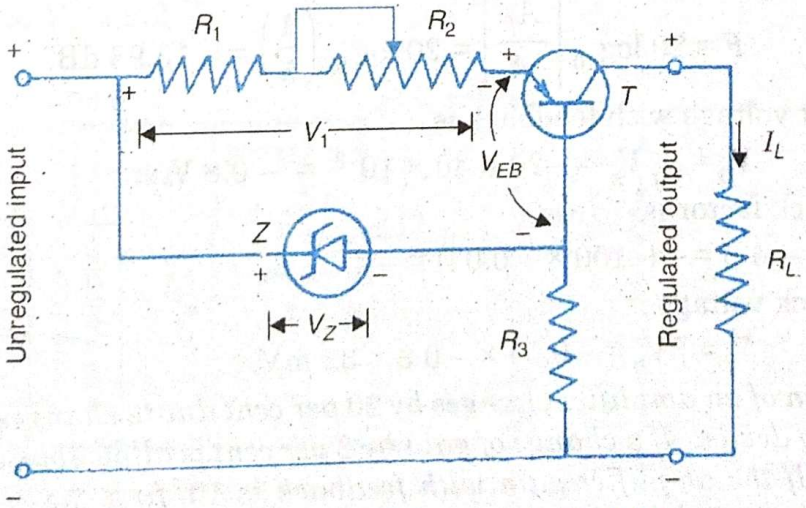

Fig. 10.18 A transistor current regulator.

The circuit of a transistor current regulator is depicted in Fig 10.18. The load current I_L is carried by the transistor *T*; therefore the circuit is a *series* current regulator. If the load current I_L changes, due to a negative feedback in the circuit, the internal resistance of the transistor *T* is adjusted to counter the change in the load current. The application of Kirchhoff's voltage law gives

$$V_I + V_{EB} = V_Z \quad \text{or,} \quad V_{EB} = V_Z - V_I \tag{10.49}$$

where V_{EB} is the emitter-base voltage of the *pnp* transistor T, V_Z is the voltage across the Zener diode Z, and V_I is the voltage drop across the resistances R_1 and R_2.

Suppose that there is an increase in the load current I_L due to a change in the load resistance R_L. Since I_L is the collector current of T, an increase of I_L increases the emitter current of T, thereby enhancing the voltage drop V_I. Since V_Z is constant, Eq. (10.49) shows that V_{EB} decreases when V_I enhances. Consequently, the collector current or the load current decreases, and the regulation is achieved.

The resistance R_2 is made variable to fix the output current at a desired level. The circuit then maintains the current at this level as the load resistance R_L changes. The resistance R_3 connected to the base of the transistor gives the current for the Zener diode operation. A small part of the current through R_3 is supplied by the transistor base current, so that a lower current passes through the Zener diode. A sufficient current must be carried by R_3 in order that the Zener diode remains fired as R_L changes. The load current remains fairly constant till the load resistance R_L becomes so large that the voltage drop across it equals the voltage drop across R_3.

Note that while a voltage regulator acts more or less like an ideal voltage source, a current regulator behaves like an ideal current source. The internal impedance of an ideal voltage source is zero but that of an ideal current source is infinite.

10.7 SOLVED PROBLEMS

1. *An amplifier has a voltage gain of* – 100. *The feedback ratio is* – 0.04. *Find (i) the voltage gain with feedback, (ii) the amount of feedback in* dB, *(iii) the output voltage of the feedback amplifier for an input voltage of* 40 mV, *(iv) the feedback factor, and (v) the feedback voltage.*

Ans. (*i*) The voltage gain with feedback is (*cf. C.U. 2012*)

$$A_f = \frac{A}{1 + A\beta} = \frac{-100}{1 + (-100)(-0.04)} = -20.$$

(*ii*) The amount of feedback in dB is

$$F = 20 \log_{10} \left| \frac{A_f}{A} \right| = 20 \log_{10} \left(\frac{1}{5} \right) = -13.98 \text{ dB}.$$

(*iii*) The output voltage with feedback is

$$V_0 = A_f V_s = -20 \times 40 \times 10^{-3} = -0.8 \text{ V}.$$

(*iv*) The feedback factor is

$$-A\beta = -(-100 \times -0.04) = -4.$$

(*v*) The feedback voltage is

$$V_f = \beta V_0 = -0.04 \times -0.8 = 32 \text{ mV}.$$

2. *The open-loop gain of an amplifier changes by* 20 *per cent due to changes in the parameters of the active amplifying device. If a change of gain by* 2 *per cent is allowable, what type of feedback has to be applied ? If the amplifier gain with feedback is* 10, *find the minimum value of the feedback ratio and the open-loop gain.*

Ans. Negative feedback has to be applied for gain stability. We have

$$\frac{dA_f}{A_f} = \frac{1}{1 + A\beta} \frac{dA}{A}.$$

Here $\frac{dA}{A} = 20\%$ and $\frac{dA_f}{A_f} = 2\%$. So, $1 + A\beta = \frac{dA}{A} \Big/ \frac{dA_f}{A_f} = \frac{20}{2} = 10$ (*i*)

Also, the gain with feedback is

$$A_f = \frac{A}{1 + A\beta} \quad \text{or,} \quad 10 = \frac{A}{10} \text{ or } A = 100,$$

which gives the open-loop gain.

We have from (*i*)

$$1 + 100\,\beta = 10 \quad \text{or,} \quad \beta = 0.09.$$

3. *The open-loop gain of an amplifier is* – 80 *and it gives an output distortion voltage of* 0.1 V. *If the tolerable output distortion voltage with negative feedback is* 0.05 V, *find the reverse transmission factor.*

Ans. We have for the output distortion voltage with feedback

$$V_{Df} = \frac{V_D}{1 + A\beta} \quad \text{or,} \quad 1 + A\beta = \frac{V_D}{V_{Df}} = \frac{0.1}{0.05} = 2$$

or,

$$A\,\beta = 1 \text{ or, } \beta = \frac{1}{A} = \frac{1}{-80} = -0.0125.$$

4. *In the circuit of* Fig. 10.19, T_1 *and* T_2 *are two silicon transistors. Find the following quantities: (i) voltages at A and B, (ii) base current of* T_1 *and emitter current of* T_2, *(iii) the current through the Zener diode, and (iv) power dissipation in* T_1. *Given,* $\beta = 50$ *for* T_1. **(cf. C.U. 1998)**

Ans. (*i*) Let V_A and V_B be the voltages of the points *A* and *B*, respectively, with respect to ground. From Fig. 10.19 we obtain

$$\frac{V_B}{10\text{ V}} = \frac{640\,\Omega}{(640 + 360)\,\Omega}$$

whence $V_B = 6.4$ V.

Then the base-emitter voltage drop for T_2 is

$$V_B - 5.6 = 6.4 - 5.6 = 0.8 \text{ V}.$$

We assume the same value of 0.8 V for the base-emitter voltage drop V_{BE} for T_1. Then $V_A + 0.8 = 10$ V, whence $V_A = 9.2$ V.

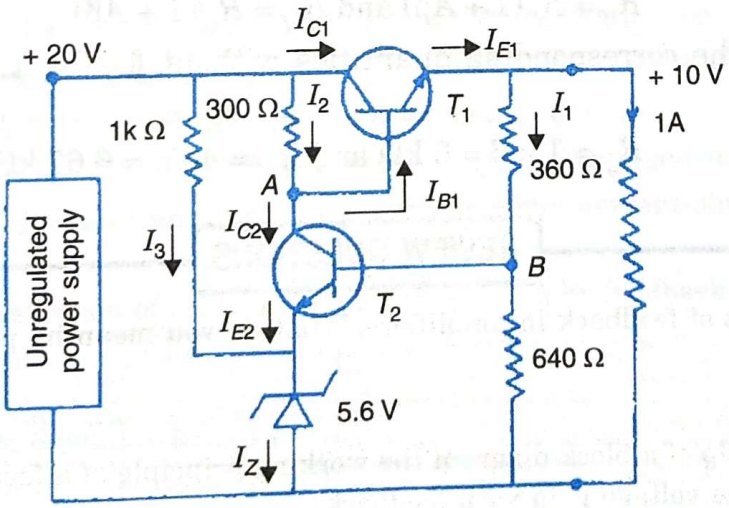

Fig. 10.19 Figure for Problem No. 4.

(*ii*) The current I_1 is

$$I_1 = \frac{10\text{ V}}{(360 + 640)\,\Omega} = 0.01 \text{ A}$$

The emitter current of T_1 is $I_{E1} = I_1 + 1 = 1.01$ A.

If I_{C1} and I_{B1} are the collector and the base currents of T_1, respectively, we have

$$I_{C1} = -I_{B1} + I_{E1}, \text{ or } \beta I_{B1} = -I_{B1} + I_{E1}, \text{ where } \beta \text{ (for } T_1\text{) is 50 (given).}$$

So, $I_{B1} = I_{E1}/(\beta + 1) = 1.01/51\text{A} = 19.8 \text{ mA}.$

The current through the 300 Ω resistance is

$$I_2 = \frac{20 - V_A}{300} = \frac{20 - 9.2}{300} \text{ A} = 36 \text{ mA}.$$

The collector current of T_2 is $I_{C2} = I_2 - I_{B1} = 36 - 19.8 = 16.2$ mA. The emitter current of T_2 is $I_{E2} \approx I_{C2} = 16.2$ mA (assuming that the base current of T_2 is negligibly small).

(*iii*) The current I_3 through the 1 kΩ resistance is

$$I_3 = \frac{(20 - 5.6)\text{ V}}{1\text{k}\Omega} = 14.4 \text{ mA}.$$

The current through the Zener diode is $I_Z = I_3 + I_{E2} = 14.4 + 16.2 = 30.6$ mA.

(*iv*) The collector-emitter voltage drop for T_1 is $V_{CE} = 20 - 10 = 10$V. The power dissipation in T_1 is $P_1 = V_{CE} I_{C1} = 10 \times 0.99$, since $I_{C1} = \beta I_{B1} = 50 \times 19.8$ mA $= 0.99$ A.

Therefore, $P_1 = 9.9$ W.

5. *The voltage gain of a transistor amplifier is 50. Its input and output resistances are 1 kΩ and 40 kΩ, respectively. If the amplifier is provided with 10% negative voltage feedback in series with the input, calculate the voltage gain, and the input and the output resistances.*

(K.U. 2004)

Ans. By the problem, the feedback voltage V_f is 10 per cent of the output voltage V_0, i.e., $V_f = 0.1\, V_0$. Hence, the feedback fraction is $\beta = V_f/V_0 = 0.1$. The gain of the feedback amplifier is $A_f = A/(1 + A\beta)$, where A is the voltage gain of the internal amplifier. Since $A = 50$,

$$A_f = \frac{50}{1 + 50 \times 0.1} = \frac{50}{6} = 8.33.$$

The input and the output resistances of the feedback amplifier are respectively given by

$$R_{if} = R_i\,(1 + A\beta) \text{ and } R_{of} = R_o/(1 + A\beta)$$

where R_i and R_o are the corresponding quantities without feedback. Given, $R_i = 1$ kΩ and $R_o = 40$ kΩ. So,

$$R_{if} = 1 \times 6 = 6 \text{ k}\Omega \text{ and } R_{of} = 40/6 = 6.67 \text{ k}\Omega.$$

REVIEW QUESTIONS

1. Explain the concept of feedback in amplifiers. What do you mean by positive and negative feedback?

(*cf. C.U. 1985*)

2. Explain with the help of a block diagram the working principle of a feedback amplifier. Find out an expression for the voltage gain with feedback.

(*C.U. 1982, 1990, 2003*)

3. Define the following terms: Degenerative feedback, regenerative feedback, feedback ratio, feedback factor, and dB of feedback.

4. What are the different ways of sampling the output signal in a feedback amplifier? Name the four feedback topologies.

5. Draw the circuit diagram of an emitter follower and explain the nature of feedback in this circuit. What is the feedback topology of the emitter follower?