The Ht4928S turns on with 60mA 5/82 approximately 60mA.
Thus the value of R3 was selected.

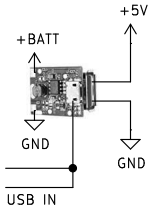

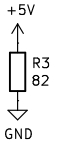

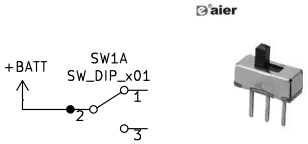

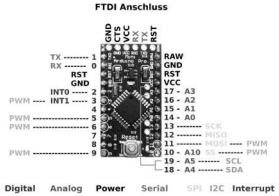

Arduino mini pin out

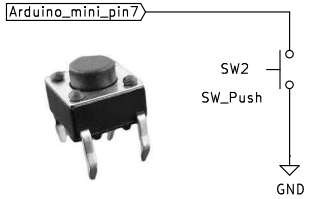

D1 led white/heatsink 1W

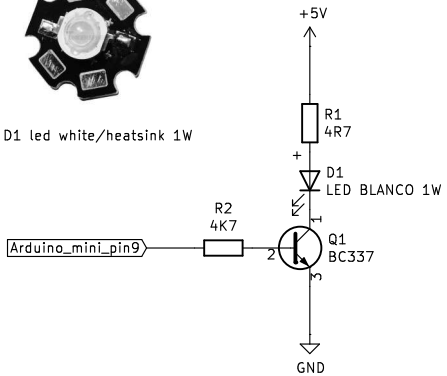

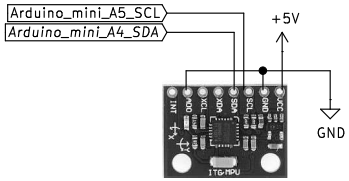

The mpu6050 goes on top of the Arduino Mini

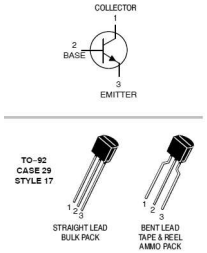

Pin out Q1 =BC337

Speaker 8 ohms 27mm 0.25W

Pam 8403

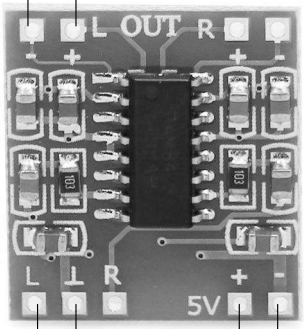

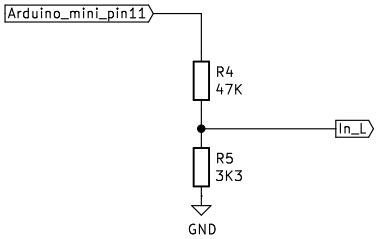

FIXED VOLUME
pout = R1/R2 * Pmax =47000/3300 * 3w = 14.24 3 =0.21 W
try with 3900 R1/R2=0.25 W

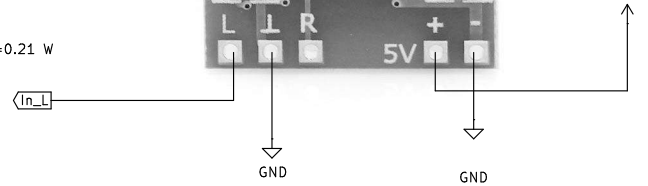

Sheet: /
File: light_saber_v1.00.sch

Title:

Size: A4	Date:	Rev:
KiCad E.D.A. kicad (5.1.6)-1		Id: 1/1