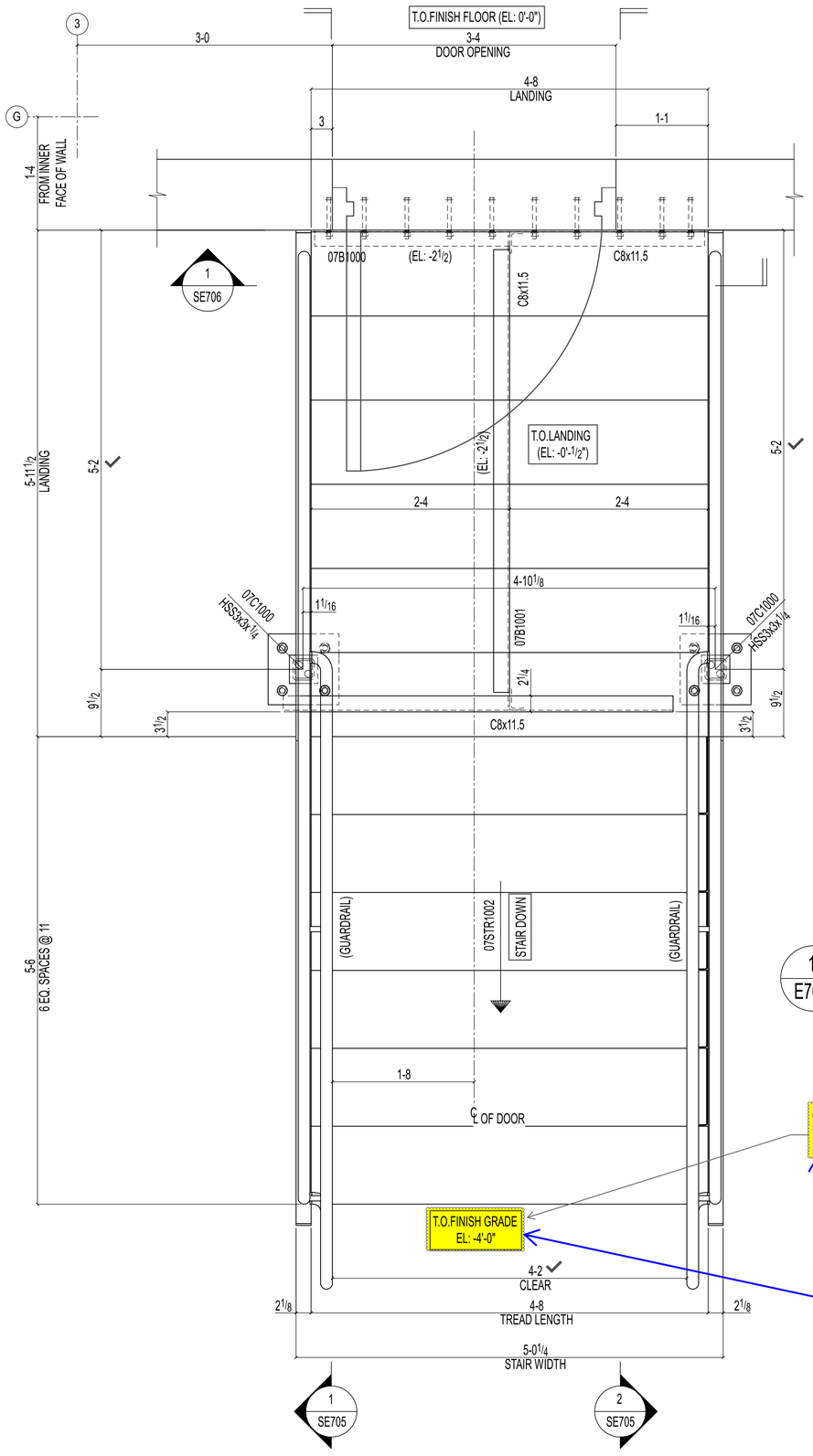

CONFIRM WITH FINAL GRADE ON SITE PRIOR TO FABRICATION

Q1

Please SURVEY & provide the final grade elevation on site.

1
E702

DOCK STAIR FRAMING PLAN

(REF: 1/A101,14/A380)

TRUE NORTH PROJECT NORTH

NOTE:
1.TOP OF SLAB REFERENCED FROM THE FINISHED FLOOR EL: [0'-0"] = DATUM EL: 100'-0" (U.N.O).
2. ALL STEELS ARE GALVANIZED (U.N.O)

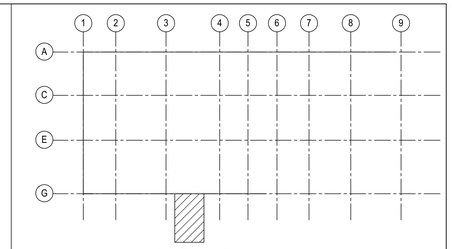

KEY PLAN

SK#17
09-09-2025
JOB:25012-Cleveland Brothers

DESCRIPTION	SECTION SIZE
STAIR STRINGER	MC12x14.3
GUARDRAIL	PIPE 1 1/4 SCH40
HANDRAIL	PIPE 1 1/4 SCH40
GUARDRAIL POST	PIPE 1 1/4 SCH80

REVISIONS

REV#	DWN BY	DESCRIPTION	DATE
A	SRP	ISSUED FOR APPROVAL	Jun 16 2025

THE INFORMATION NOTED HEREON THIS DRAWING IS THE PROPERTY OF STEEL FAB ENTERPRISES, INC. AND SHALL NOTED BE USED WITHOUT WRITTEN CONSENT.

STEEL FAB
ENTERPRISES, LLC
AISC CERTIFIED FABRICATOR AND ERECTOR
MISCELLANEOUS METALS FABRICATOR AND ERECTORS
623 BAUMGARDNER ROAD, LANCASTER, PA 17603
TEL. (717)464-0330 FAX (717)464-9464
WWW.STEELFABENTERPRISES.COM

PROJECT OWNER : CK CAPITAL, LLC
PROJECT DESCRIPTION : CLEVELAND BROTHERS-MILESBURG
PROJECT ADDRESS : 1025N. EAGLE VALLEY ROAD, HOWARD, PA 16841
CONTRACTOR : KINSLEY CONSTRUCTION, INC.

DRAWN BY : BAS	DATE : 5-20-25	PROJ. NO. :	25912	REV # A
CHECKED BY : SRP	DATE : 5-20-25	DWG NO. :	E702	

DWG DESCRIPTION : DOCK STAIR FRAMING PLAN

Q2

Please confirm, If any additional steel is required at the clouded location for tie of point.

If additional support is needed, kindly provide the necessary details.

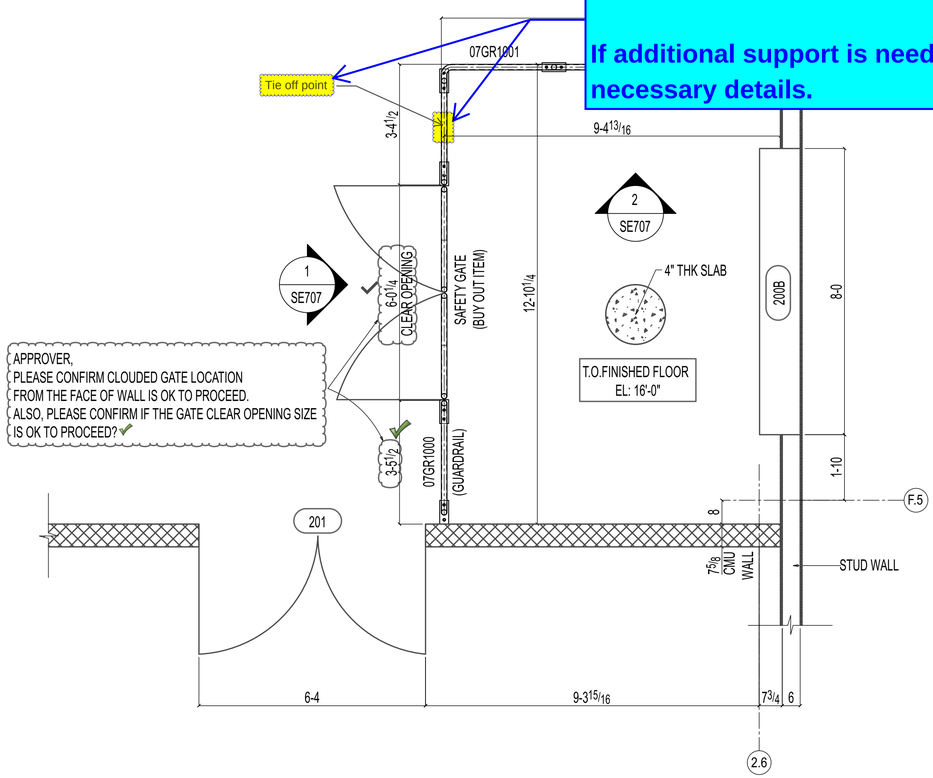

1 / E703 MEZZANINE GUARDRAIL PLAN

(REF:1/A380)

NOTE:
1. ALL ELEVATION ARE REFERENCED FROM THE FINISHED FLOOR EL: [0'-0"] = DATUM EL: 100'-0" (U.N.O).
2. ALL GUARDRAILS ARE PIPE 1 1/2 SCH40 (U.N.O)

APPROVER,
WE HAVE FOLLOWED 1 1/2" SCH 40 PIPE FOR
THE FLOOR GUARDRAILS. PLEASE CONFIRM IF IT IS ACCEPTABLE.

TRUE NORTH PROJECT NORTH

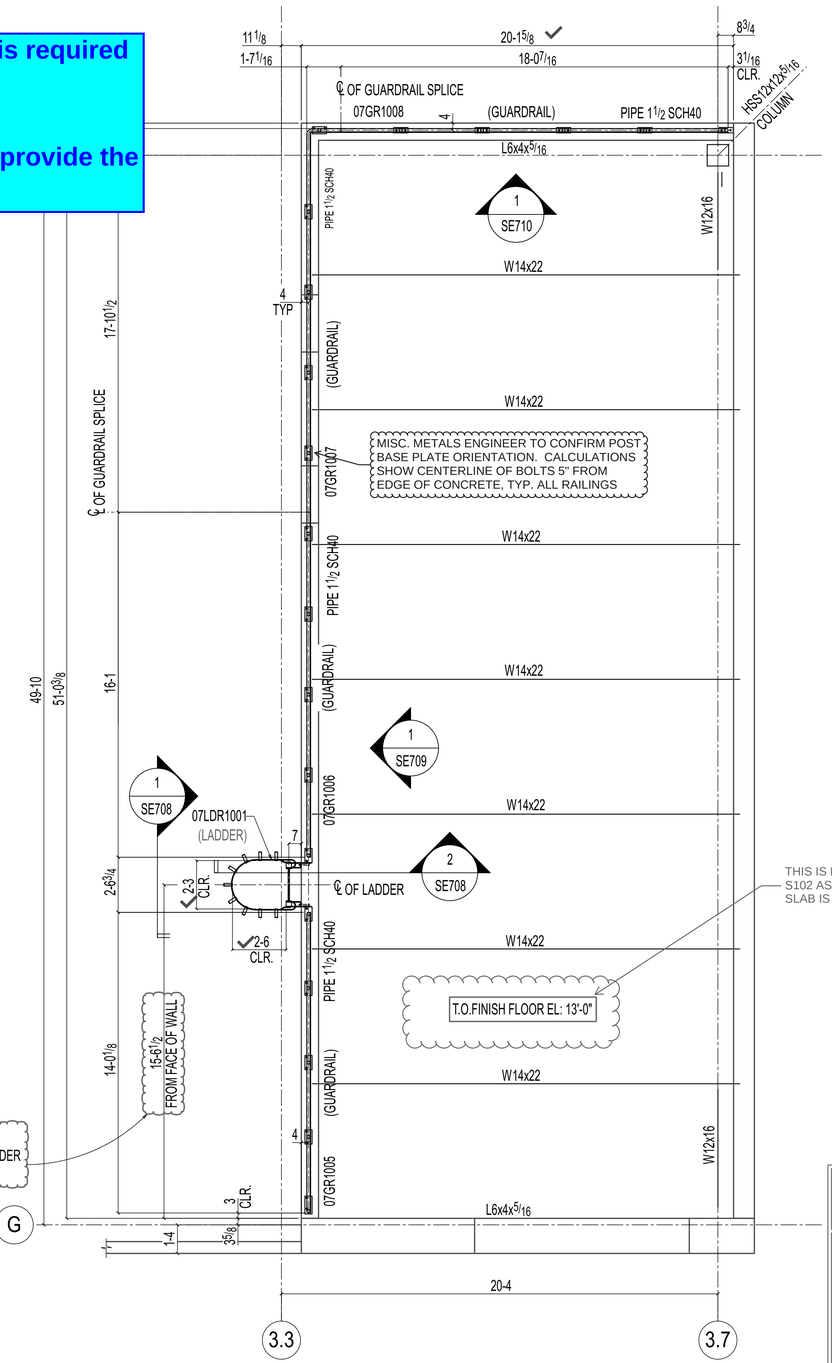

APPROVER,
PLEASE CONFIRM CLOUDED LADDER
LOCATION FROM FACE OF WALL.

THIS IS INCORECT, REFER TO SHEET
S102 AS THE TOP OF CONCRETE
SLAB IS SHOWN AS +15'-0" AFF

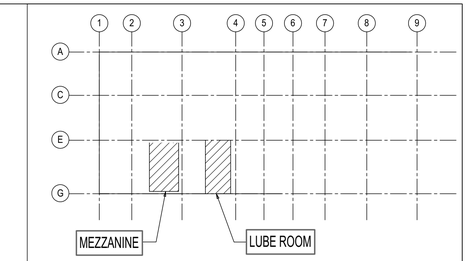

KEY PLAN

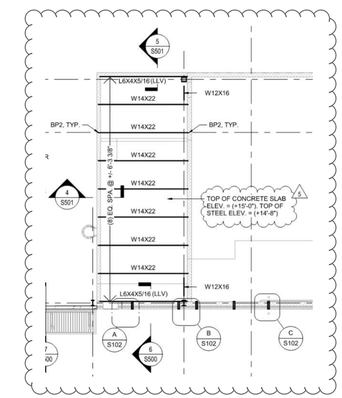

2 / E703 LUBE ROOM DUST CAP (LADDER AND GUARDRAIL PLAN)

(REF: 1/A102,5/A173)

NOTE:
1. ALL ELEVATION ARE REFERENCED FROM THE FINISHED FLOOR EL: [0'-0"] = DATUM EL: 100'-0" (U.N.O).
2. ALL GUARDRAILS ARE PIPE 1 1/2 SCH40 (U.N.O)

APPROVER,
WE HAVE FOLLOWED 1 1/2" SCH 40 PIPE FOR
THE FLOOR GUARDRAILS. PLEASE CONFIRM IF IT IS ACCEPTABLE.

TRUE NORTH PROJECT NORTH

REVISIONS

REV#	DWN BY	DESCRIPTION	DATE
A	SRP	ISSUED FOR APPROVAL	Jun 16 2025

THE INFORMATION NOTED HEREON THIS DRAWING IS THE PROPERTY OF STEEL FAB ENTERPRISES, INC. AND SHALL NOTED BE USED WITHOUT WRITTEN CONSENT.

STEEL FAB
ENTERPRISES, LLC
AISC CERTIFIED FABRICATOR AND ERECTOR
MISCELLANEOUS METALS FABRICATOR AND ERECTORS
623 BAUMGARDNER ROAD, LANCASTER, PA 17603
TEL. (717)464-0330 FAX (717)464-9464
WWW.STEELFABENTERPRISES.COM

PROJECT OWNER : CK CAPITAL, LLC
PROJECT DESCRIPTION : CLEVELAND BROTHERS-MILESBURG
PROJECT ADDRESS : 1025N. EAGLE VALLEY ROAD, HOWARD, PA 16841
CONTRACTOR : KINSLEY CONSTRUCTION, INC.

DRAWN BY : BAS	DATE : 5-20-25	PROJ. NO. : 25912	REV # A
CHECKED BY : SRP	DATE : 5-20-25	DWG NO. : E703	

DWG DESCRIPTION : GUARDRAIL & LADDER PLAN

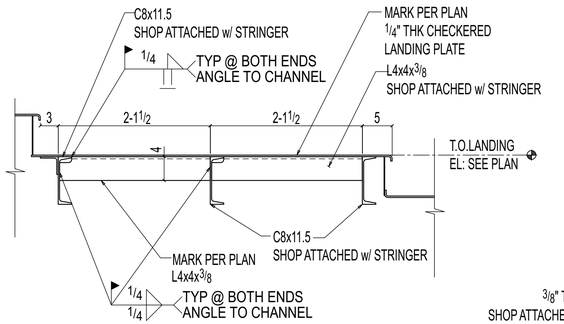

1 SE704 SECTION

OTHERS NOT SHOWN FOR CLARITY

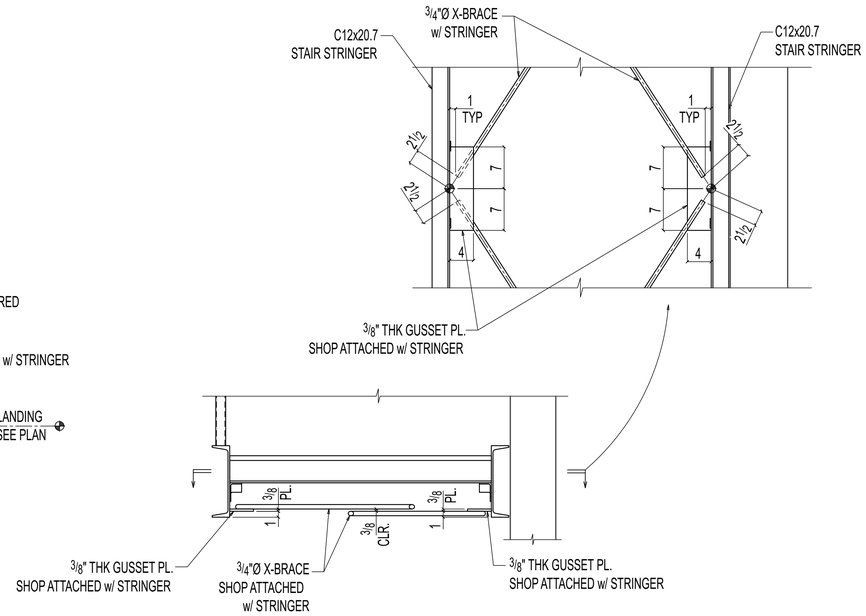

2 SE704 SECTION

OTHERS NOT SHOWN FOR CLARITY

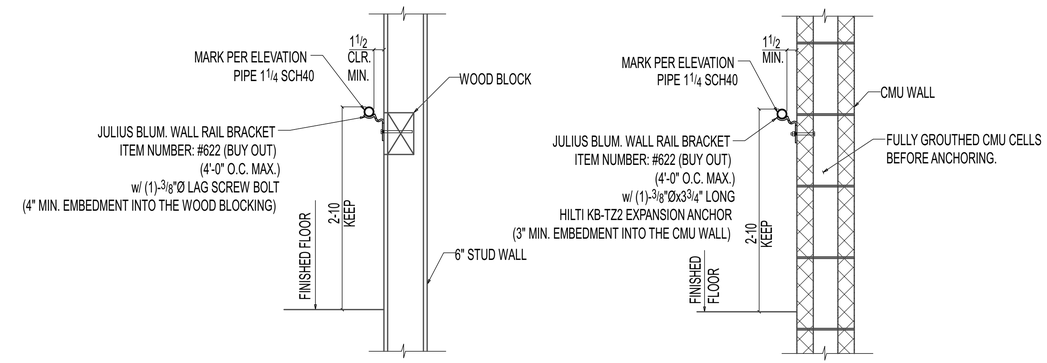

CONNECT WITH STUD WALL

CONNECT WITH CMU WALL

TYPICAL WALLRAIL BRACKET DETAIL

(REF: 9/A380)

Q3

As per the architectural drawing, the guardrail height is 3'-6". However, we have followed the typical SFE job standard and maintained a guardrail height of 3'-7" for field tolerance.

Please confirm 3-7. is OK to proceed?
(TYP at all rails)

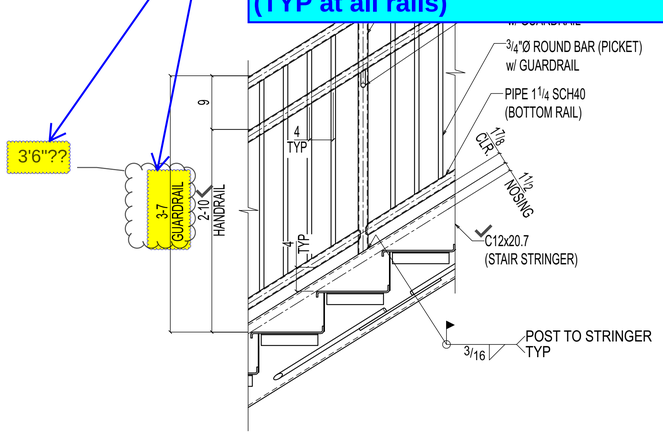

TYPICAL GUARDRAIL DETAIL

(REF: 8/A380)

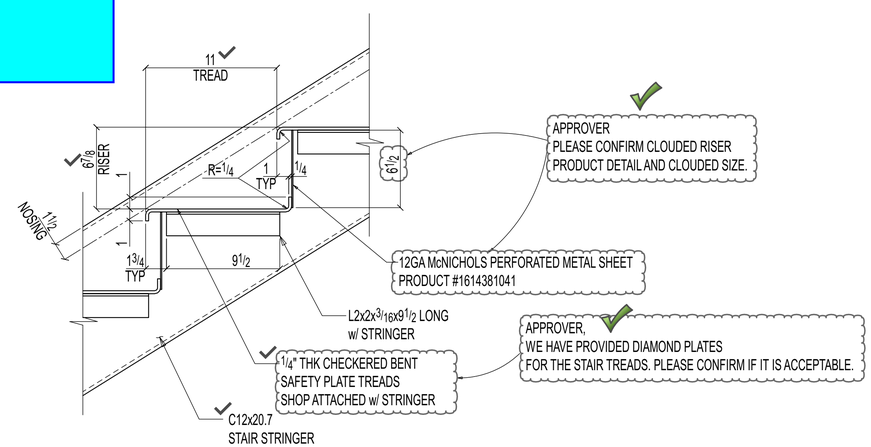

TYPICAL STRINGER & TREAD DETAIL

(REF: 11/A380)

REVISIONS

REV#	DWN BY	DESCRIPTION	DATE
A	SRP	ISSUED FOR APPROVAL	Jun 16 2025

THE INFORMATION NOTED HEREON THIS DRAWING IS THE PROPERTY OF STEEL FAB ENTERPRISES, INC. AND SHALL NOTED BE USED WITHOUT WRITTEN CONSENT.

STEEL FAB
ENTERPRISES, LLC
AISC CERTIFIED FABRICATOR AND ERECTOR
MISCELLANEOUS METALS FABRICATOR AND ERECTORS
623 BAUMGARDNER ROAD, LANCASTER, PA 17603
TEL. (717)464-0330 FAX (717)464-9464
WWW.STEELFABENTERPRISES.COM

PROJECT OWNER : CK CAPITAL, LLC

PROJECT DESCRIPTION : CLEVELAND BROTHERS-MILESBURG

PROJECT ADDRESS : 1025N. EAGLE VALLEY ROAD, HOWARD, PA 16841

CONTRACTOR : KINSLEY CONSTRUCTION, INC.

DRAWN BY : BAS	DATE : 5-20-25	PROJ. NO. : 25012	REV # A
CHECKED BY : SRP	DATE : 5-20-25	DWG NO. : SE704	

DWG DESCRIPTION : SECTION & DETAIL &TYPICAL DETAILS

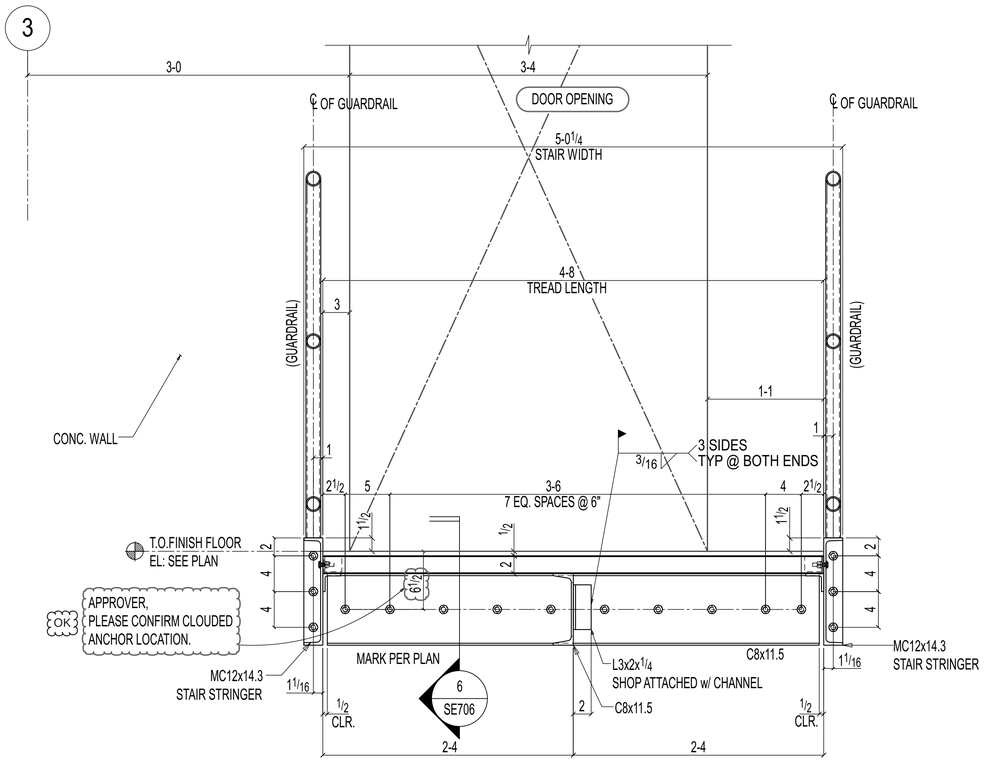

1 SE706 ELEVATION VIEW

OTHER NOT SHOWN FOR CLARITY

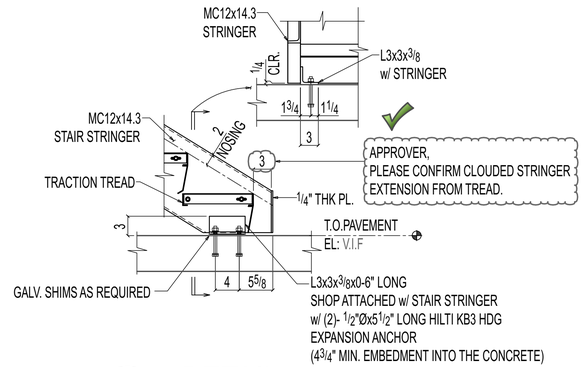

2 SE706 DETAIL

(REF:16/A380)

OTHERS NOT SHOWN FOR CLARITY

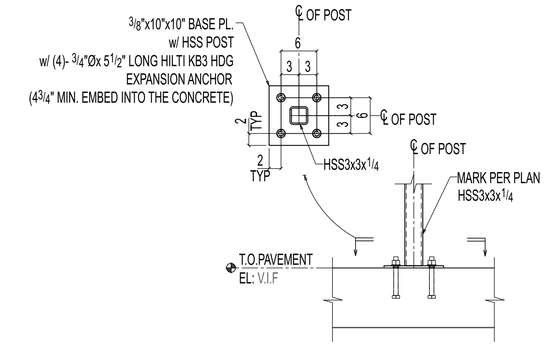

3 SE706 DETAIL

OTHERS NOT SHOWN FOR CLARITY

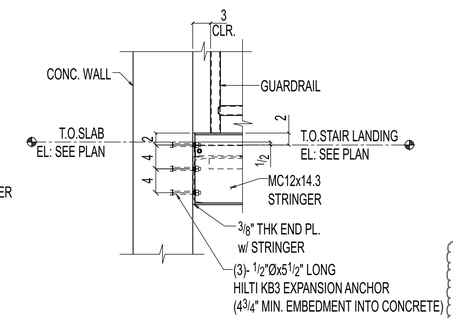

APPROVER,
PLEASE CONFIRM CLOUDED TRACTION
TREAD PRODUCT DETAIL AND FASTENER
INFO FOR LANDING IS OK TO PROCEED?

4 SE706 DETAIL

OTHERS NOT SHOWN FOR CLARITY

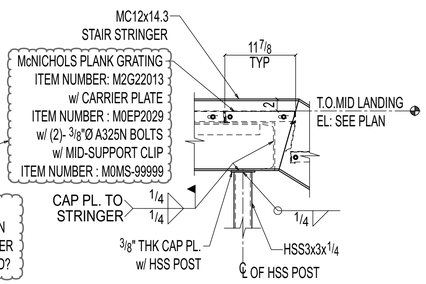

5 SE706 DETAIL

OTHERS NOT SHOWN FOR CLARITY

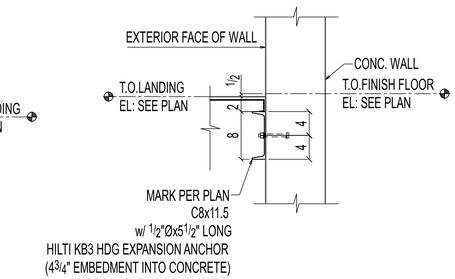

6 SE706 SECTION

OTHERS NOT SHOWN FOR CLARITY

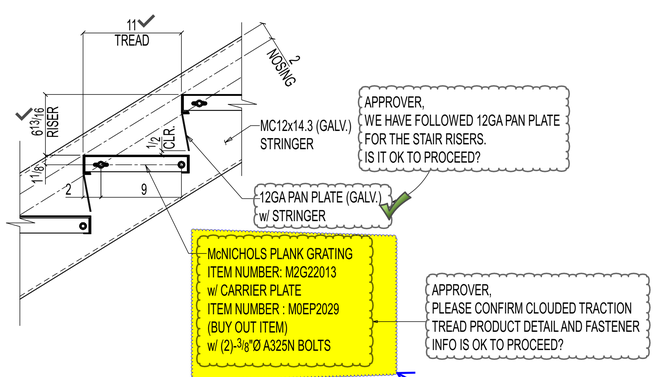

TYPICAL STRINGER & TREAD DETAIL

Q4

Please confirm clouded tread details.

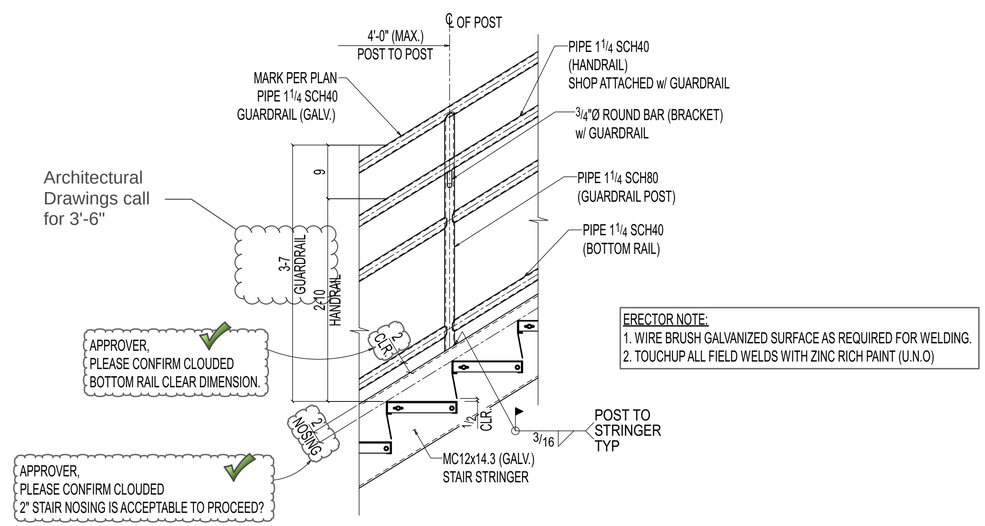

ERECTOR NOTE:
1. WIRE BRUSH GALVANIZED SURFACE AS REQUIRED FOR WELDING.
2. TOUCHUP ALL FIELD WELDS WITH ZINC RICH PAINT (U.N.O)

TYPICAL GUARDRAIL DETAIL

(REF: 8/A380)

REVISIONS

REV#	DWN BY	DESCRIPTION	DATE
A	SRP	ISSUED FOR APPROVAL	Jun 16 2025

THE INFORMATION NOTED HEREON THIS DRAWING IS THE PROPERTY OF STEEL FAB ENTERPRISES, INC. AND SHALL NOTED BE USED WITHOUT WRITTEN CONSENT.

STEEL FAB
ENTERPRISES, LLC
AISC CERTIFIED FABRICATOR AND ERECTOR
MISCELLANEOUS METALS FABRICATOR AND ERECTORS
623 BAUMGARDNER ROAD, LANCASTER, PA 17603
TEL. (717)464-0330 FAX (717)464-9464
WWW.STEELFABENTERPRISES.COM

PROJECT OWNER : CK CAPITAL, LLC

PROJECT DESCRIPTION : CLEVELAND BROTHERS-MILESBURG

PROJECT ADDRESS : 4025N. EAGLE VALLEY ROAD, HOWARD, PA 16841

CONTRACTOR : KINSLEY CONSTRUCTION, INC.

DRAWN BY : BAS	DATE : 5-20-25	PROJ. NO. :	25012	REV # A
CHECKED BY : SRP	DATE : 5-20-25	DWG NO. :	SE706	

DWG DESCRIPTION : SECTIONS

THIS ELEVATION IS INCORRECT, REFER TO STR. DRAWINGS.

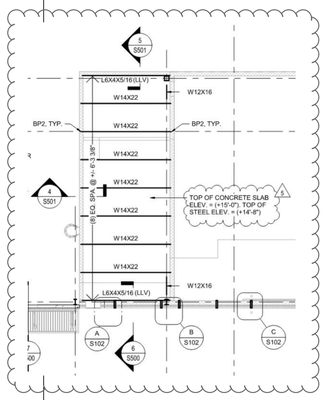

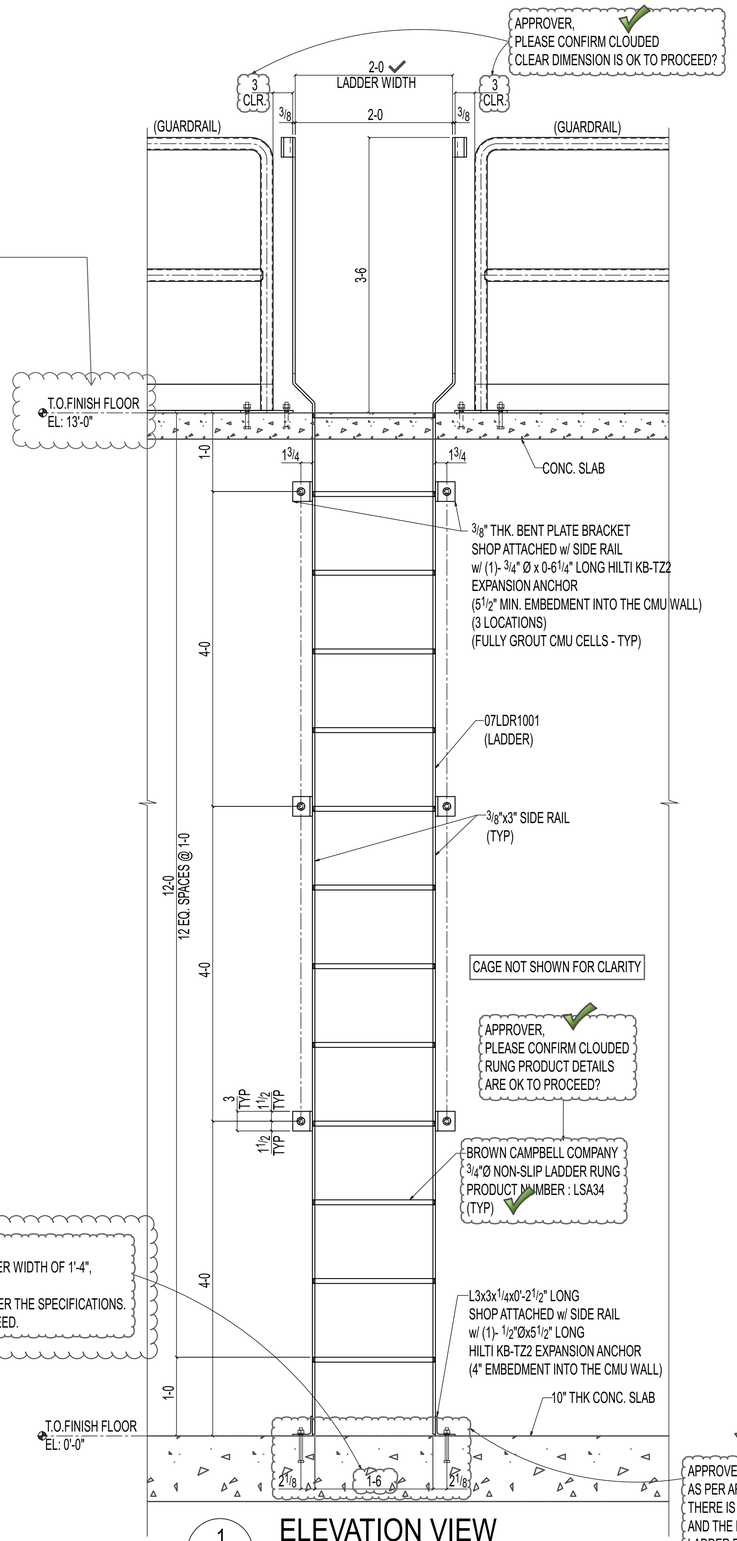

1 SE708 ELEVATION VIEW

OTHER NOT SHOWN FOR CLARITY

APPROVER, AS PER ARCHITECTURAL DRAWING 6/A101, THERE IS A CLEARANCE BETWEEN THE FLOOR AND THE LADDER. WE INTEND TO CONNECT THE LADDER DIRECTLY TO THE FLOOR INSTEAD. PLEASE CONFIRM IF THIS IS ACCEPTABLE TO PROCEED.

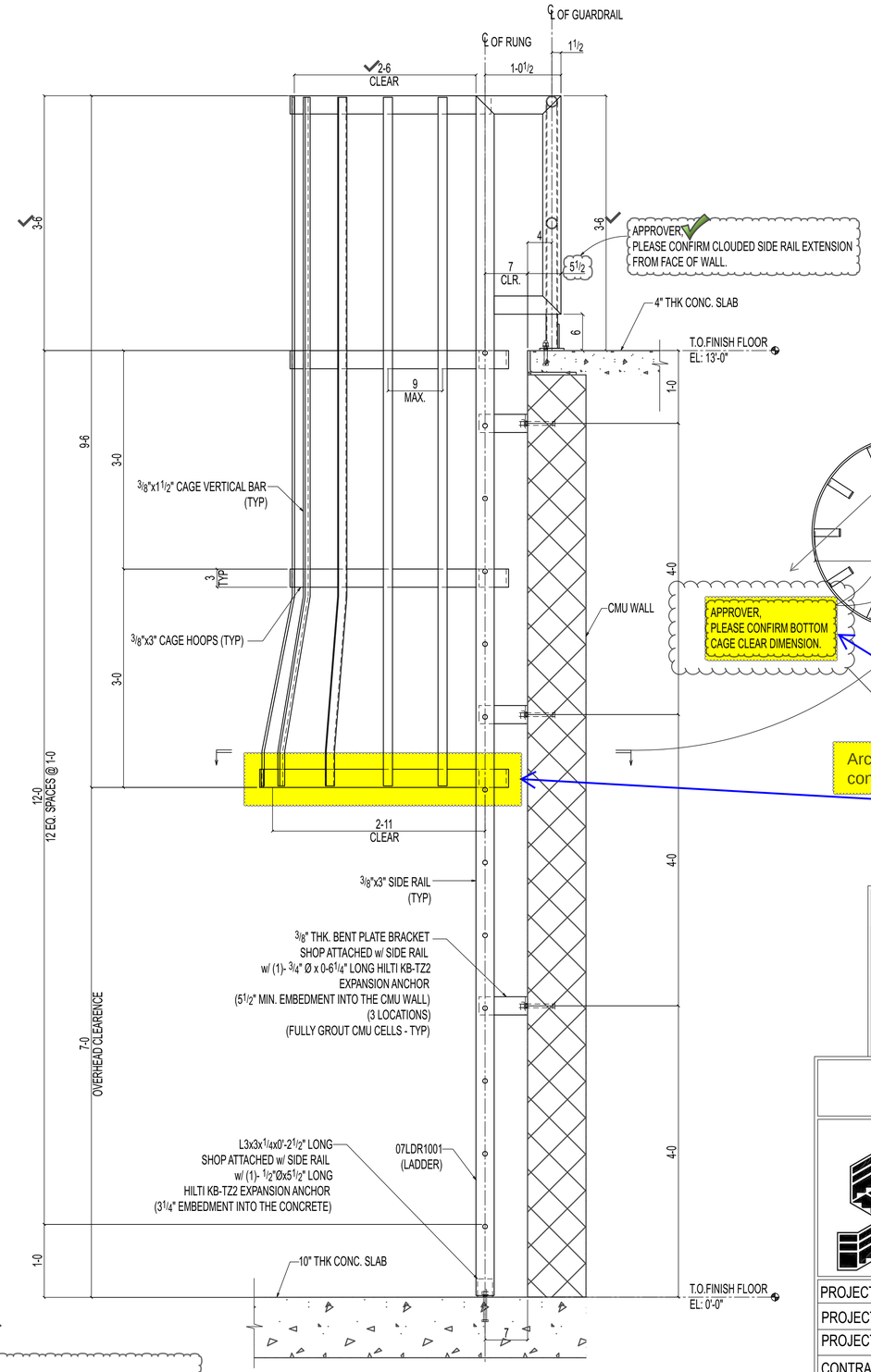

2 SE708 ELEVATION VIEW

OTHER NOT SHOWN FOR CLARITY

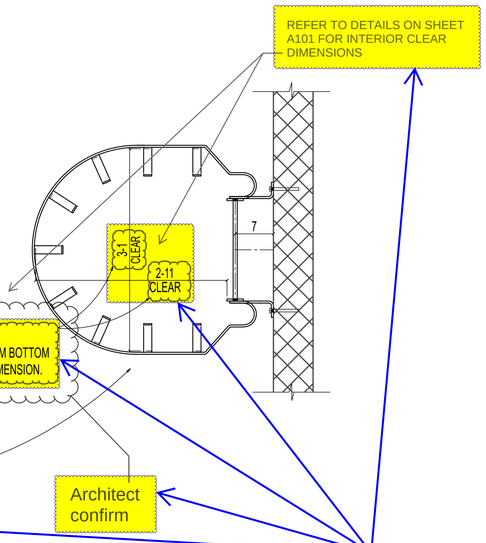

Q5

The arch drawing shows only the inside clear dimension of the cage. Please also confirm the clear dimension of the bottom hoop cage.

REV#			
A			

THE INFORMATION NOTED HEREON THIS DRAWING IS THE PROPERTY OF STEEL FAB ENTERPRISES, INC. AND SHALL NOTED BE USED WITHOUT WRITTEN CONSENT.

STEEL FAB ENTERPRISES, LLC
AISC CERTIFIED FABRICATOR AND ERECTOR
MISCELLANEOUS METALS FABRICATOR AND ERECTORS
623 BAUMGARDNER ROAD, LANCASTER, PA 17603
TEL. (717)464-0330 FAX (717)464-9464
WWW.STEELFABENTERPRISES.COM

PROJECT OWNER : CK CAPITAL, LLC

PROJECT DESCRIPTION : CLEVELAND BROTHERS-MILESBURG

PROJECT ADDRESS : 1025N. EAGLE VALLEY ROAD, HOWARD, PA 16841

CONTRACTOR : KINSLEY CONSTRUCTION, INC.

DRAWN BY : BAS	DATE : 5-20-25	PROJ. NO. : 25012	REV # A
CHECKED BY : SRP	DATE : 5-20-25	DWG NO. : SE708	

DWG DESCRIPTION : LADDER ELEVATION VIEW

Q6

Please confirm clouded ladder width.

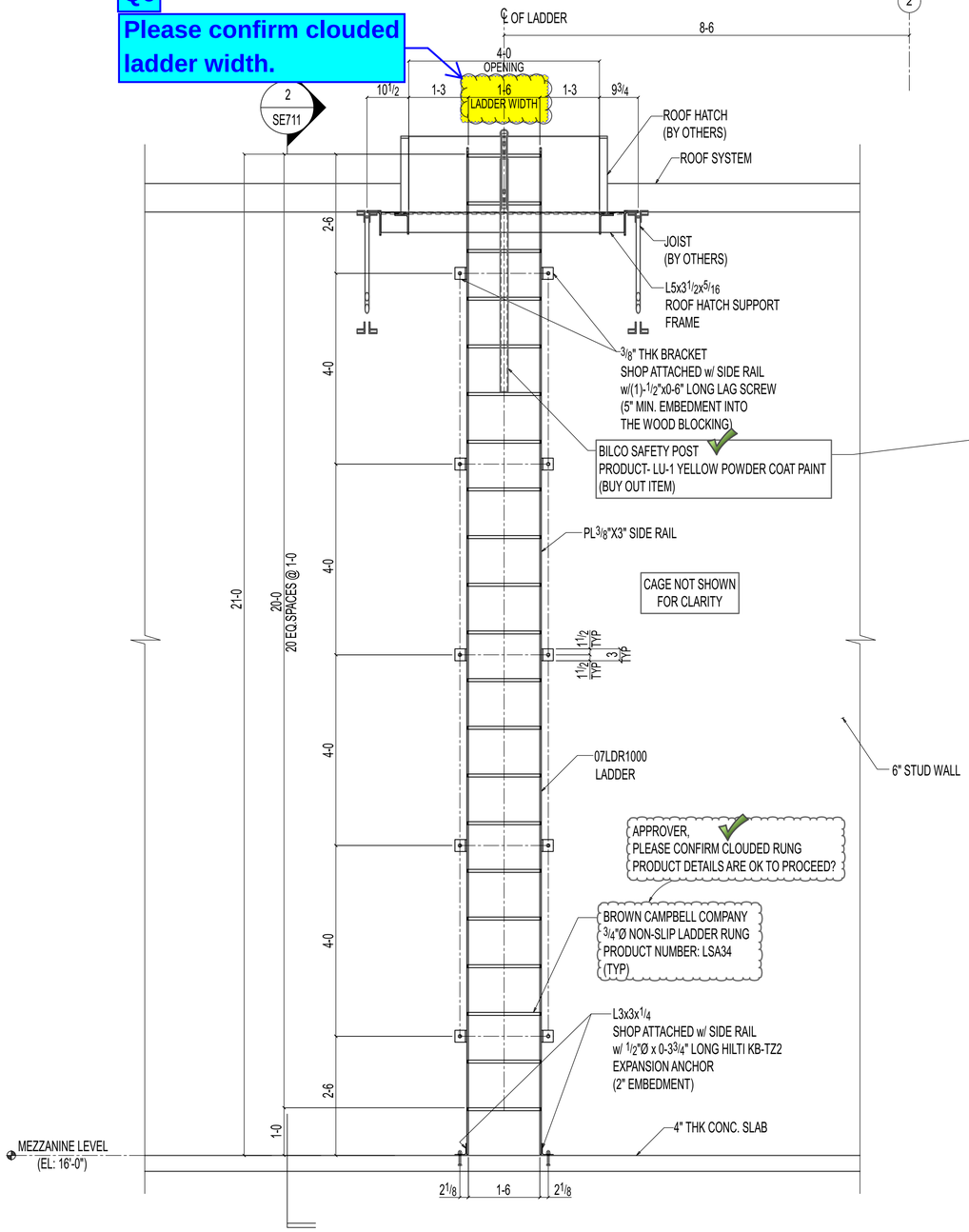

1 SE711 ELEVATION VIEW

(REF:3/A411)

OTHER NOT SHOWN FOR CLARITY

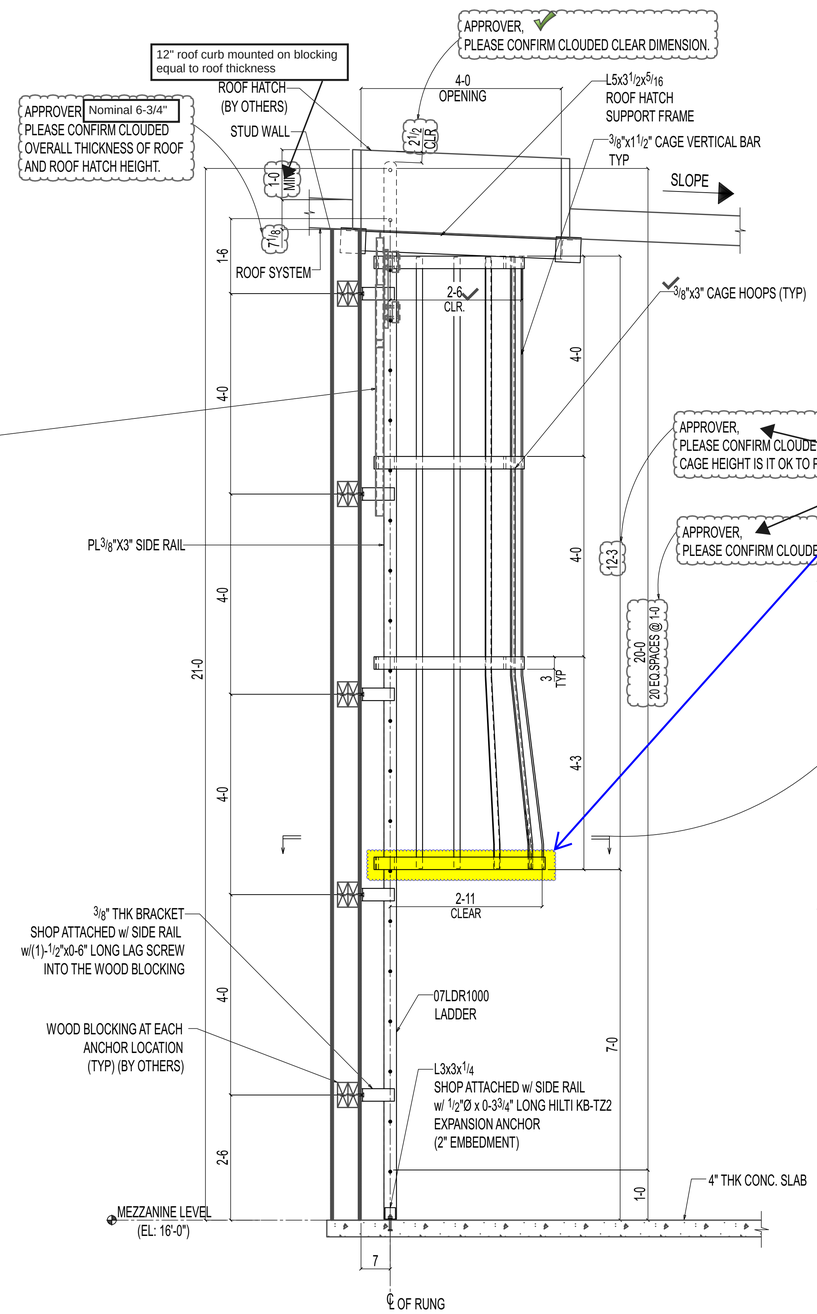

2 SE711 ELEVATION VIEW

(REF:3/A411)

OTHER NOT SHOWN FOR CLARITY

Q7

The arch drawing shows only the inside clear dimension of the cage. Please also confirm the clear dimension of the bottom hoop cage.

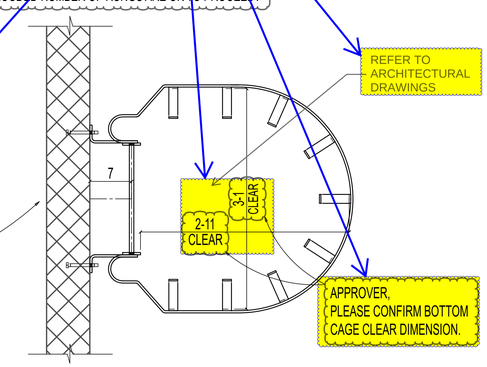

NOTE:
1. ALL ELEVATION ARE REFERENCED FROM THE FINISHED FLOOR EL: [0'-0"] = DATUM EL:100'-0" (U.N.O).

REVISIONS

REV#	DWN BY	DESCRIPTION	DATE
A	SRP	ISSUED FOR APPROVAL	Jun 16 2025

THE INFORMATION NOTED HEREON THIS DRAWING IS THE PROPERTY OF STEEL FAB ENTERPRISES, INC. AND SHALL NOT BE USED WITHOUT WRITTEN CONSENT.

STEEL FAB ENTERPRISES, LLC
AISC CERTIFIED FABRICATOR AND ERECTOR
MISCELLANEOUS METALS FABRICATOR AND ERECTORS
623 BAUMGARDNER ROAD, LANCASTER, PA 17603
TEL. (717)464-0330 FAX (717)464-9464
WWW.STEELFABENTERPRISES.COM

PROJECT OWNER : CK CAPITAL, LLC

PROJECT DESCRIPTION : CLEVELAND BROTHERS-MILESBURG

PROJECT ADDRESS : 1025N. EAGLE VALLEY ROAD, HOWARD, PA 16841

CONTRACTOR : KINSLEY CONSTRUCTION, INC.

DRAWN BY : BAS	DATE : 5-20-25	PROJ. NO. :	25012	REV # A
CHECKED BY : SRP	DATE : 5-20-25	DWG NO. :	SE711	

DWG DESCRIPTION : LADDER ELEVATION VIEW

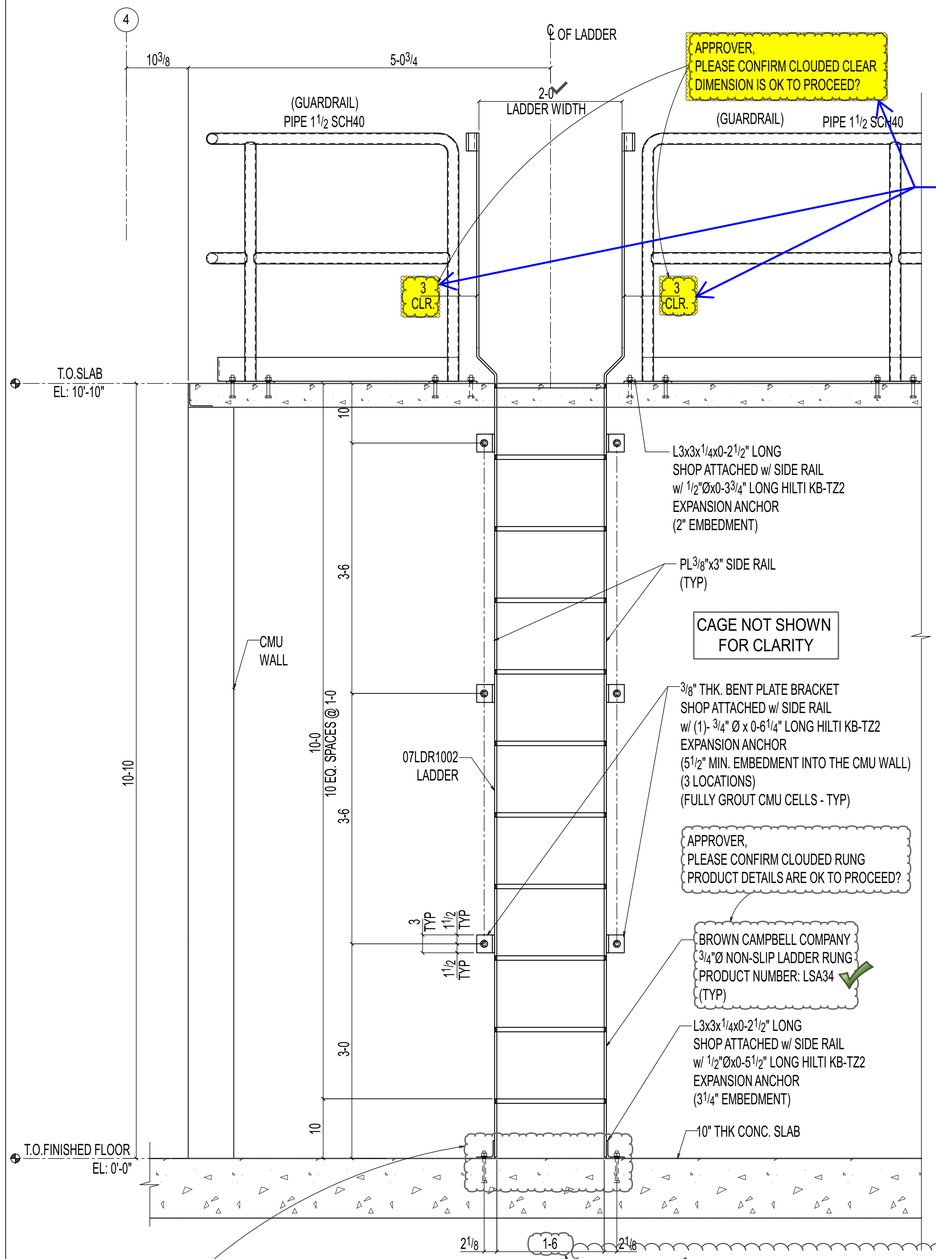

1 SE713 ELEVATION

OTHERS NOT SHOWN FOR CLARITY

APPROVER,
AS PER ARCHITECTURAL DRAWING 6/A101, THERE IS A CLEARANCE BETWEEN THE FLOOR AND THE LADDER. WE INTEND TO CONNECT THE LADDER DIRECTLY TO THE FLOOR INSTEAD. PLEASE CONFIRM IF THIS IS ACCEPTABLE TO PROCEED.

APPROVER,
ARCHITECTURAL DRAWING 6/A101 INDICATES LADDER WIDTH OF 1'-4",
BUT THE SPECIFICATION SHOWS A WIDTH OF 1'-6".
WE HAVE FOLLOWED THE 1'-6" LADDER WIDTH AS PER THE SPECIFICATIONS.
PLEASE CONFIRM IF THIS IS ACCEPTABLE TO PROCEED.

Q8

Please confirm clouded clear dimension.

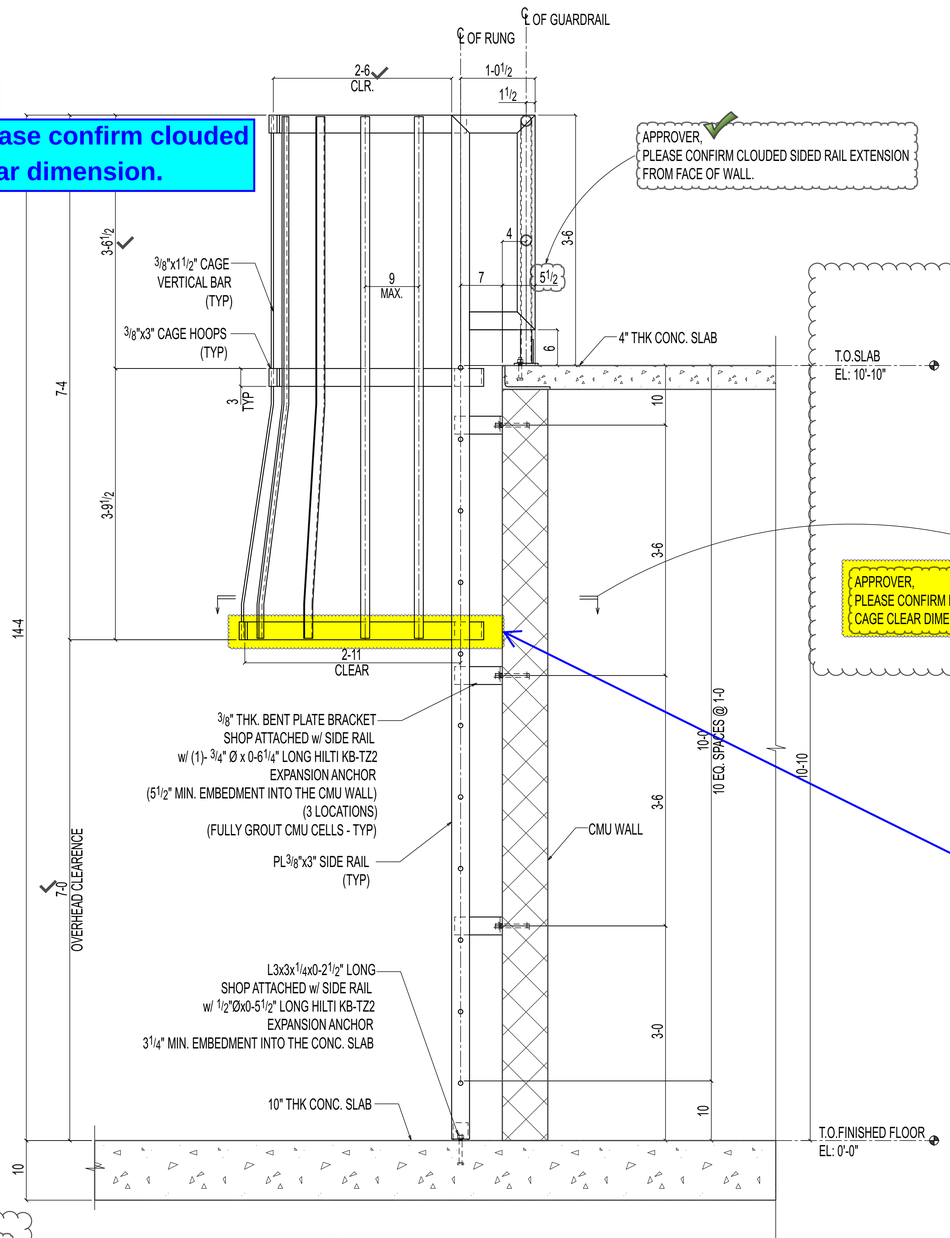

2 SE713 SECTION

(REF: 3/A411)

OTHERS NOT SHOWN FOR CLARITY

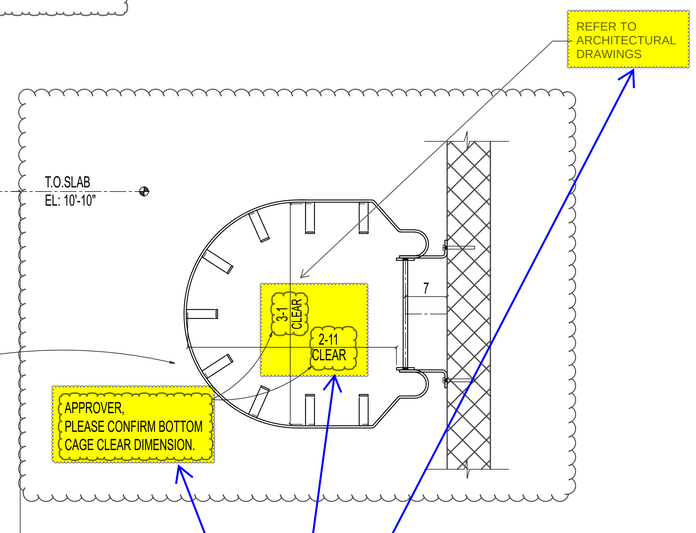

Q9

The arch drawing shows only the inside clear dimension of the cage. Please also confirm the clear dimension of the bottom hoop cage

REV#	D
A	SI

THE INFORMATION NOTED HEREON THIS DRAWING IS THE PROPERTY OF STEEL FAB ENTERPRISES, INC. AND SHALL NOT BE USED WITHOUT WRITTEN CONSENT.

STEEL FAB
ENTERPRISES, LLC
MISCELLANEOUS METALS FABRICATOR AND ERECTORS
623 BAUMGARDNER ROAD, LANCASTER, PA 17603
TEL. (717)464-0330 FAX (717)464-9464
WWW.STEELFABENTERPRISES.COM

AISC CERTIFIED FABRICATOR AND ERECTOR

PROJECT OWNER : CK CAPITAL, LLC

PROJECT DESCRIPTION : CLEVELAND BROTHERS-MILESBURG

PROJECT ADDRESS : 1025N. EAGLE VALLEY ROAD, HOWARD, PA 16841

CONTRACTOR : KINSLEY CONSTRUCTION, INC.

DRAWN BY : BAS	DATE : 5-20-25	PROJ. NO. :	25012	REV # A
CHECKED BY : SRP	DATE : 5-20-25	DWG NO. :	SE713	

DWG DESCRIPTION : LADDER ELEVATION VIEW

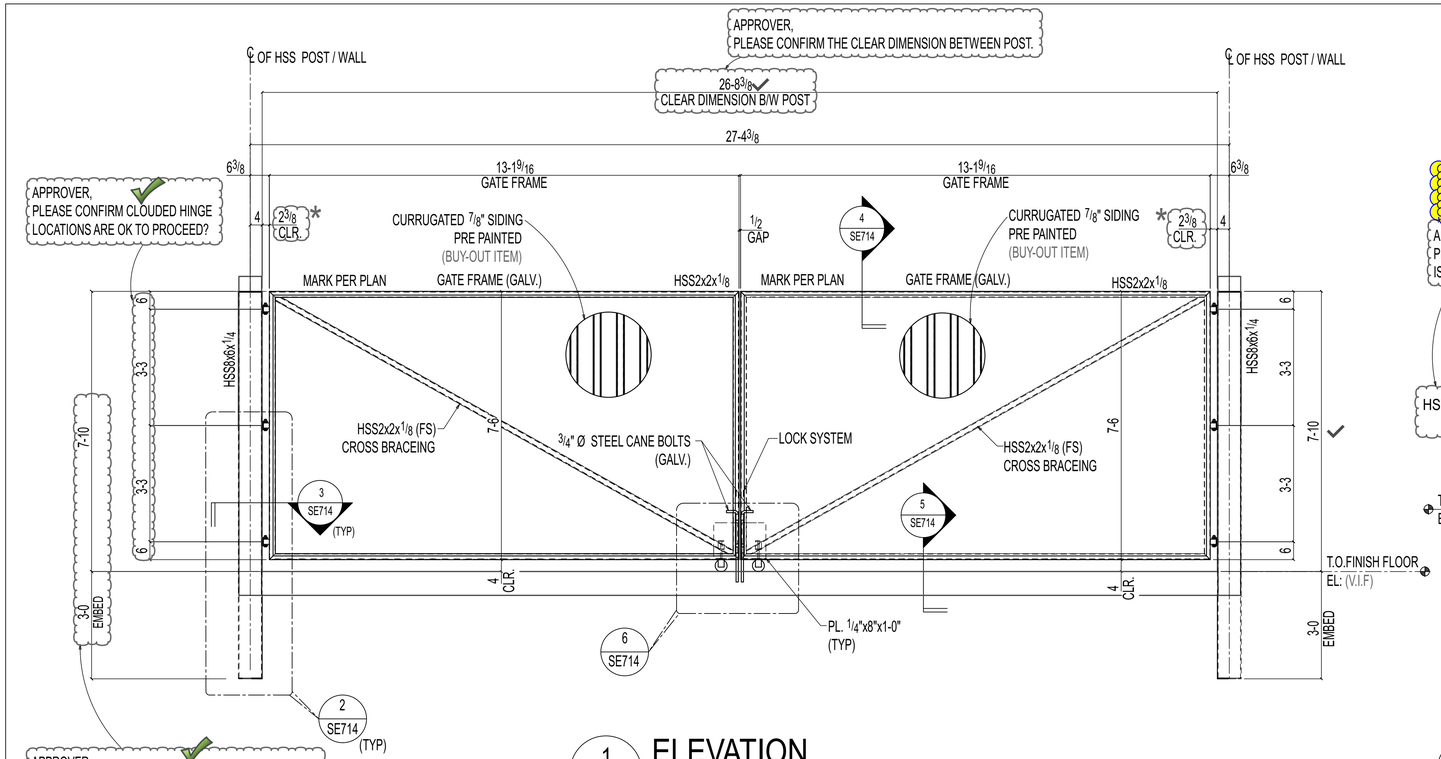

1 SE714 **ELEVATION**

(REF: 2/A182)

OTHERS NOT SHOWN FOR CLARITY

NOTE:
ALL GATE STEELS AND COLUMNS ARE GALVANIZED AND PAINTED (MT1).

* -APPROVER,
PLEASE CONFIRM CLOUDED POST TO GATE FRAME CLEAR DIMENSION IS OK TO PROCEED?

Q10

Please provide galvanized hinge product details since we couldn't find the appropriate one.

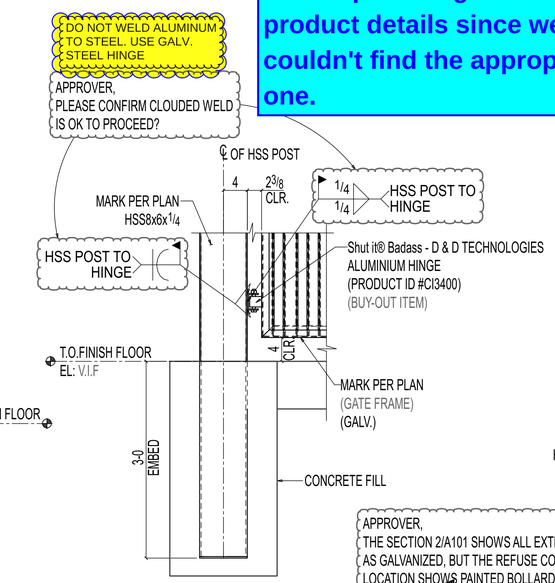

2 SE714 **DETAIL**

OTHERS NOT SHOWN FOR CLARITY

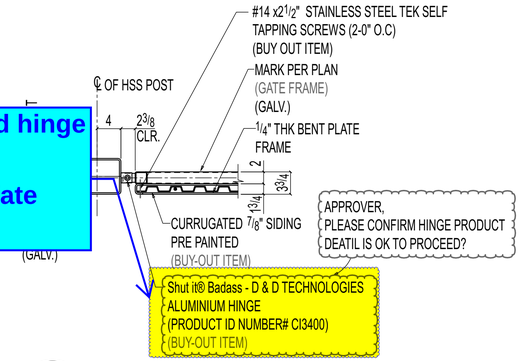

3 SE714 **SECTION**

OTHERS NOT SHOWN FOR CLARITY

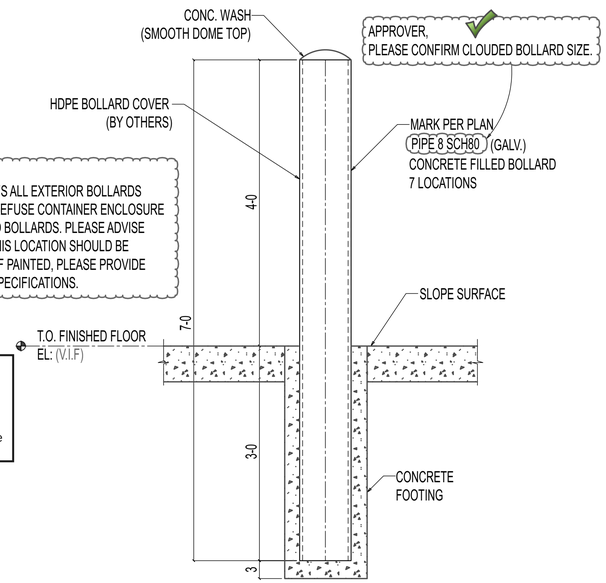

APPROVER,
THE SECTION 2/A101 SHOWS ALL EXTERIOR BOLLARDS AS GALVANIZED, BUT THE REFUSE CONTAINER ENCLOSURE LOCATION SHOWS PAINTED BOLLARDS. PLEASE ADVISE WHETHER BOLLARDS AT THIS LOCATION SHOULD BE GALVANIZED OR PAINTED. IF PAINTED, PLEASE PROVIDE CLEANING AND PAINTING SPECIFICATIONS.

Refer to Section 05 5000 2.03, F & G
F. Bollards:
2. Finish:
a. Washbay and Exterior Locations: Hot dipped galvanized with bollard cover
b. Other Locations: Shop primed and bollard cover.
G. Bollard Covers: Provide UV treated high density polyethylene covers suitable for exterior exposure, secured in-place with adhesive.

TYPICAL PIPE BOLLARD DETAIL

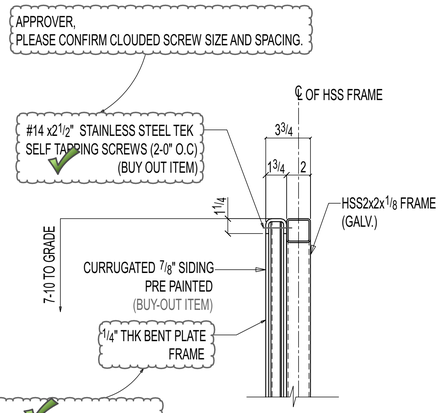

4 SE714 **SECTION**

OTHERS NOT SHOWN FOR CLARITY

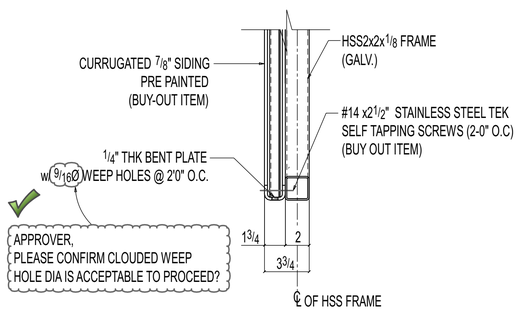

5 SE714 **SECTION**

OTHERS NOT SHOWN FOR CLARITY

ERECTOR NOTE:
1. WIRE BRUSH GALVANIZED SURFACE AS REQUIRED FOR WELDING.
2. TOUCHUP ALL FIELD WELDS WITH ZINC RICH PAINT (U.N.O)

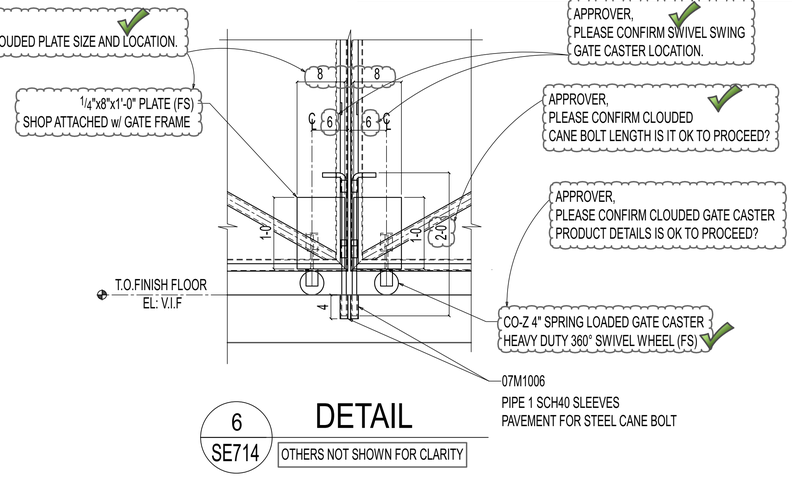

6 SE714 **DETAIL**

OTHERS NOT SHOWN FOR CLARITY

REVISIONS

REV#	DWN BY	DESCRIPTION	DATE
A	SRP	ISSUED FOR APPROVAL	Jun 16 2025

THE INFORMATION NOTED HEREON THIS DRAWING IS THE PROPERTY OF STEEL FAB ENTERPRISES, INC. AND SHALL NOT BE USED WITHOUT WRITTEN CONSENT.

STEEL FAB
ENTERPRISES, LLC
MISCELLANEOUS METALS FABRICATOR AND ERECTORS
623 BAUMGARDNER ROAD, LANCASTER, PA 17603
TEL. (717)464-0330 FAX (717)464-9464
WWW.STEELFABENTERPRISES.COM

AISC CERTIFIED FABRICATOR AND ERECTOR

PROJECT OWNER : CK CAPITAL, LLC
PROJECT DESCRIPTION : CLEVELAND BROTHERS-MILESBURG
PROJECT ADDRESS : 4025N. EAGLE VALLEY ROAD, HOWARD, PA 16841
CONTRACTOR : KINSLEY CONSTRUCTION, INC.

DRAWN BY : BAS	DATE : 5-20-25	PROJ. NO. : 25012	REV # A
CHECKED BY : SRP	DATE : 5-20-25	DWG NO. : SE714	

DWG DESCRIPTION : ELEVATION VIEW & SECTION

BILL OF MATERIAL

ASSEMBLY MARK	TOTAL QTY	SUB-PIECE MARK	UNIT QTY	MATERIAL DESCRIPTION	LENGTH FT	LENGTH IN	REMARKS	UNIT WEIGHT	TOTAL WEIGHT
07FR1000	ONE			FRAME			GALV.	867	867
	1	07FR1000	1	HSS2x2x1/8	13	19/16	A500C	40	40
	1	hss1008	1	HSS2x2x1/4	14	8	A500C	79	79
	1	hss1006	1	HSS2x2x1/8	13	19/16	A500C	40	40
	2	hss1007	2	HSS2x2x1/8	7	6	A500C	23	46
	1	p40163	1	PIPE 3/4 XS	0	1	A500C	0	0
	2	p40162	2	PIPE 3/4 STD	0	2	A500C	0	0
	1	rb35	1	RB3/4	2	37/16	A36	3	3
	1	m13	1	SHULTBADAS SCI3400	0	2	A36	2	2
	2	m14	2		0	2	A36	2	4
	1	pl1185	1	PL3/8x8	1	0	A36	10	10
	1	bpl618	1	PL1/4x1579/16	0	37/16	BENT A36	38	38
	1	bpl698	1	PL1/4x1579/16	0	37/16	BENT A36	38	38
	2	bpl619	2	PL1/4x90	0	37/16	BENT A36	22	44
	1	m12	1	HEAVY DUTY SWIVEL	0	8	A36	10	10
	1	pl1184	1	PL1/4x1	0	2	A36	0	0
	1	mdg2	1	CORRUGATED SIDING	7	51/2		511	511

Total weight : 867

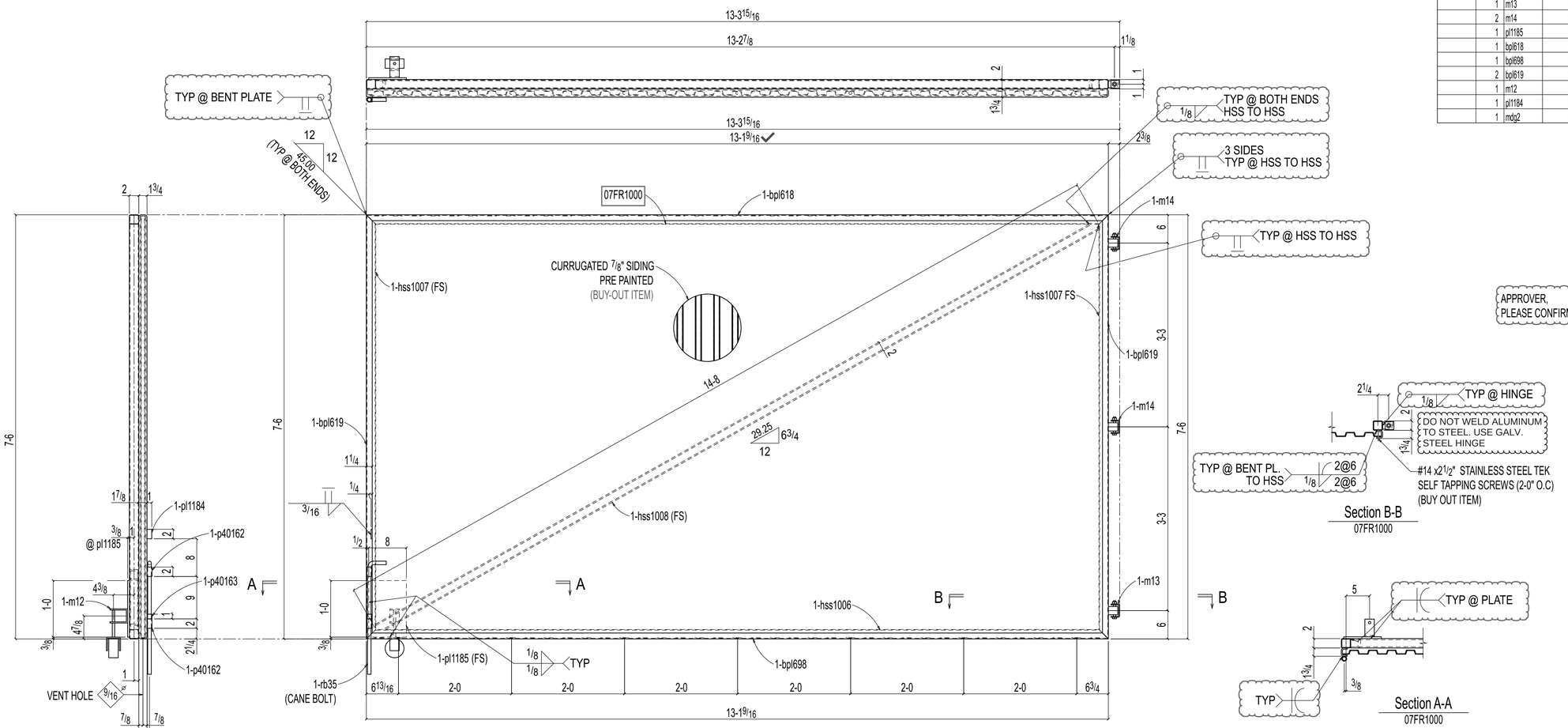

ONE FRAME 07FR1000

APPROVER,
PLEASE CONFIRM ALL CLOUDED WELDS ARE OK TO PROCEED?

OK EXCEPT SECTION B-B.

Section B-B
07FR1000

Section A-A
07FR1000

Q11
Please confirm clouded paint & preparation.

APPROVER,
PLEASE CONFIRM CLOUDED PAINT AND PREPARATION IS OK TO PROCEED?

PAINT NOTE:
1. ALL STEEL FRAMES TO BE GALVANIZED AND AFTER GALVANIZED TO BE (MT1) PAINTED.

ALL RE-ENTRANT CUT TO BE 1/2" RADIUSED (U.N.O)
WELDS : E70XX
HOLES : 13/16" DIA (U.N.O)
MAT'L : A36 (U.N.O)
CLEAN : -
PAINT : SEE PAINT NOTE

REVISIONS

REV	DWN BY	DATE	DESCRIPTION
A	GSV	Jun 16 2025	ISSUED FOR APPROVAL

THE INFORMATION NOTED HEREON THIS DRAWING IS THE PROPERTY OF STEEL FAB ENTERPRISES, INC. AND SHALL NOT BE USED WITHOUT WRITTEN CONSENT.

STEEL FAB ENTERPRISES, LLC
AISC CERTIFIED FABRICATOR AND ERECTOR
MISCELLANEOUS METALS FABRICATOR AND ERECTORS
623 BAUMGARDNER ROAD, LANCASTER, PA 17603
TEL. (717)464-0330 FAX (717)464-9464
WWW.STEELFABENTERPRISES.COM

PROJECT OWNER : CK CAPITAL, LLC
PROJECT DESCRIPTION : CLEVELAND BROTHERS-MILESBURG
PROJECT ADDRESS : 1025N. EAGLE VALLY ROAD, HOWARD, PA 16841
CONTRACTOR : KINSLEY CONSTRUCTION, INC.

DRAWN BY : BAS	DATE : 06-07-2025	PROJ. NO. : 25012	REV # A
CHECKED BY : GSV	DATE : 06-09-2025	DWG NO. : 07FR1000	

DWG DESCRIPTION : GATE FRAME

PRINTED ON Jun 17 2025 00:56:11

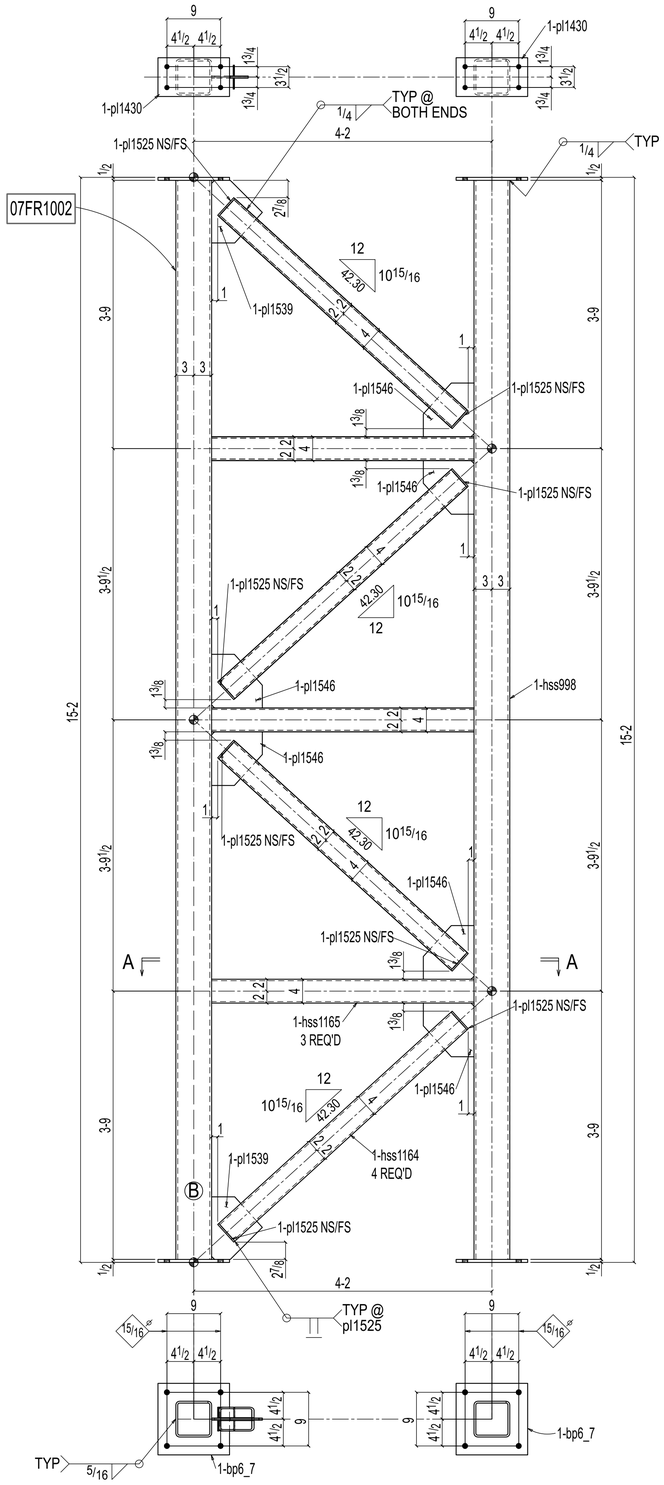

ONE COLUMN 07FR1002

AT GRID:
F & 2.7

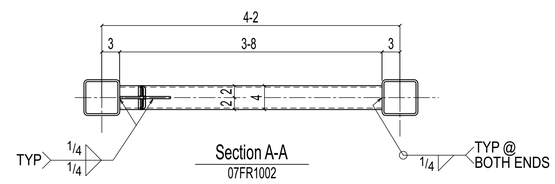

Section A-A
07FR1002

BILL OF MATERIAL

ASSEMBLY MARK	TOTAL QTY	SUB-PIECE MARK	UNIT QTY	MATERIAL DESCRIPTION	LENGTH FT	LENGTH IN	REMARKS	UNIT WEIGHT	TOTAL WEIGHT
07FR1002	ONE			COLUMN			PNT	1191	1191
	1	07FR1002	1	HSS6x6x5/16	15	1	S1E A500C	352	352
	1	hss998	1	HSS6x6x3/16	15	1	S1E A500C	352	352
	4	hss1164	4	HSS4x4x1/4	4	41/16	A500C	54	214
	3	hss1165	3	HSS4x4x1/4	3	8	A500C	45	134
	2	bp6_7	2	PL1/2x12	1	0	A36	20	41
	2	pl1430	2	PL1/2x61/2	1	0	A36	11	22
	2	pl1539	2	PL3/8x61/2	0	101/2	A36	9	19
	6	pl1546	6	PL3/8x81/2	0	9	A36	8	49
	16	pl1525	16	PL1/4x13/4	0	4	A36	0	8
				FIELD BOLTS					
	8			3/4 Dia HILTI KB-TZ2	0	61/4	+1HD WASH		

Total weight : 1191

Q12

Please confirm clouded paint & preparation.

APPROVER,
PLEASE CONFIRM CLOUDED PAINT AND PREPARATION IS OK TO PROCEED?

ALL RE-ENTRANT CUT TO BE 1/2" RADIUSED (U.N.O)
WELDS : E70XX
HOLES : 13/16" DIA (U.N.O)
MAT'L : A36 (U.N.O)
CLEAN : SSPC-SP2
PAINT : SHOP PRIMER

REVISIONS

REV	DWN BY	DATE	DESCRIPTION
A	GSV	Jun 16 2025	ISSUED FOR APPROVAL

THE INFORMATION NOTED HEREON THIS DRAWING IS THE PROPERTY OF STEEL FAB ENTERPRISES, INC. AND SHALL NOT BE USED WITHOUT WRITTEN CONSENT.

STEEL FAB ENTERPRISES, LLC
AISC CERTIFIED FABRICATOR AND ERECTOR
MISCELLANEOUS METALS FABRICATOR AND ERECTORS
623 BAUMGARDNER ROAD, LANCASTER, PA 17603
TEL. (717)464-0330 FAX (717)464-9464
WWW.STEELFABENTERPRISES.COM

PROJECT OWNER : CK CAPITAL, LLC
PROJECT DESCRIPTION : CLEVELAND BROTHERS-MILESBURG
PROJECT ADDRESS : 1025N. EAGLE VALLY ROAD, HOWARD, PA 16841
CONTRACTOR : KINSLEY CONSTRUCTION, INC.

DRAWN BY : BAS	DATE : 06-07-2025	PROJ. NO. : 25012	REV # A
CHECKED BY : GSV	DATE : 06-09-2025	DWG NO. : 07FR1002	
DWG DESCRIPTION : FRAME DETAIL			

PRINTED ON Jun 17 2025 00:36:12

BILL OF MATERIAL

ASSEMBLY MARK	TOTAL QTY	SUB-PIECE MARK	UNIT QTY	MATERIAL DESCRIPTION	LENGTH FT	LENGTH IN	REMARKS	UNIT WEIGHT	TOTAL WEIGHT
07STR1002	ONE			STAIR			Galv	950	950
	1	07STR1002	1	MC12x14.3	6	11 7/8	A36	104	104
	1	ch452	1	MC12x14.3	6	11 7/8	A36	104	104
	1	ch403	1	MC12x14.3	5	11 11/16	A36	85	85
	1	ch401	1	MC12x14.3	5	11 11/16	A36	85	85
	2	a1073	2	L3x3x3/8	0	6	A36	4	7
	2	a1160	2	L2x2x1/4	5	2 1/2	A36	17	33
	1	ch455	1	C8x11.5	4	8	A36	54	54
	2	pl1171	2	PL3/8x2 1/8	1	0	A36	3	5
	2	pl1470	2	PL1/4x2 1/8	0	7 9/16	A36	1	2
	1	bpl597	1	PL12GAx56	0	5 9/16	BENT A36	9	9
	6	bpl700	6	PL12GAx56	0	5 1/16	BENT A36	8	50
	12	bpl594	12	CHKD3/32x17 1/8	4	8	BENT A36	32	389
	12	bpl595	12	PL3/32x11 11/16	1	3 3/16	BENT A36	1	8
	12	bpl596	12	PL3/32x11 11/16	1	3 3/16	BENT A36	1	8
	18		18	3/8 Dia F1852N	0	1 1/2		0	2
	30		30	3/8 Dia F1852N	0	1 1/2		0	3
				FIELD BOLTS					
	6			1/2 Dia HILTI KB-TZ2	0	5 1/2	+1HD WASH		
	4			1/2 Dia HILTI KB-TZ2	0	4 1/2	+1HD WASH		

Total weight : 950

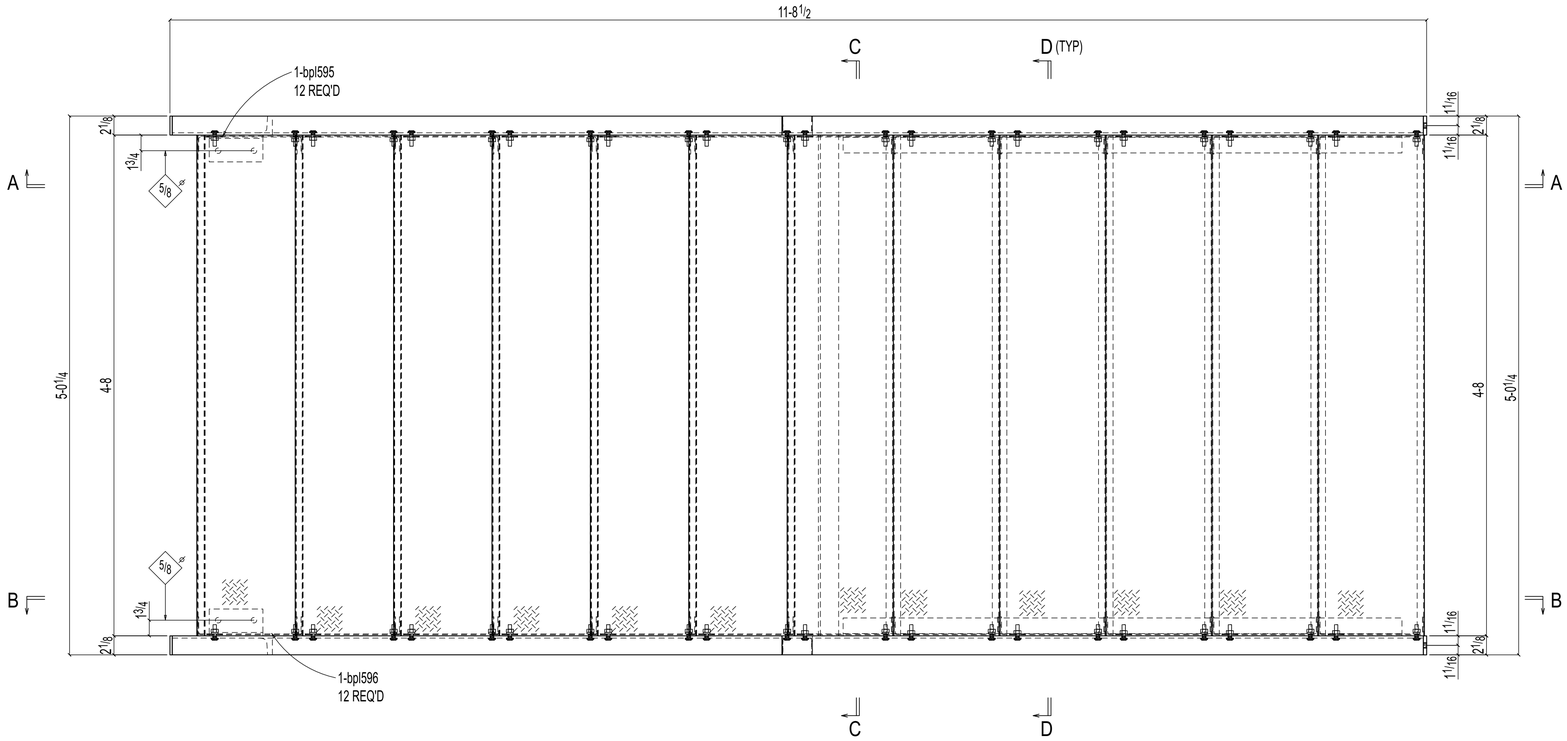

ONE STAIR 07STR1002

SHOP BOLTS (Unless Noted):
30-3/8Diax1 1/2 F1852N

Q13

Please confirm clouded paint & preparation.

APPROVER,
PLEASE CONFIRM CLOUDED PAINT AND PREPARATION IS OK TO PROCEED?

ALL RE-ENTRANT CUT TO BE 1/2" RADIUSED (U.N.O)	
WELDS : E70XX	
HOLES : 13/16" DIA (U.N.O)	
MAT'L : A36 (U.N.O)	
CLEAN : -	
PAINT : GALVANIZED	

REVISIONS

REV	DWN BY	DATE	DESCRIPTION
A	GSV	Jun 16 2025	ISSUED FOR APPROVAL

THE INFORMATION NOTED HEREON THIS DRAWING IS THE PROPERTY OF STEEL FAB ENTERPRISES, INC. AND SHALL NOTED BE USED WITHOUT WRITTEN CONSENT.

STEEL FAB
ENTERPRISES, LLC
AISC CERTIFIED FABRICATOR AND ERECTOR
MISCELLANEOUS METALS FABRICATOR AND ERECTORS
623 BAUMGARDNER ROAD, LANCASTER, PA 17603
TEL. (717)464-0330 FAX (717)464-9464
WWW.STEELFABENTERPRISES.COM

PROJECT OWNER : CK CAPITAL, LLC
PROJECT DESCRIPTION : CLEVELAND BROTHERS-MILESBURG
PROJECT ADDRESS : 1025N. EAGLE VALLY ROAD, HOWARD, PA 16841
CONTRACTOR : KINSLEY CONSTRUCTION, INC.

DRAWN BY : BAS	DATE : 06-07-2025	PROJ. NO. : 25012	REV # A
CHECKED BY : GSV	DATE : 06-09-2025	DWG NO. : 07STR1002	

DWG DESCRIPTION : STAIR DETAIL

PRINTED ON Jun 17 2025 00:56:25