BILL OF MATERIAL

LINE #	QTY TOTAL	PC MARK	DESCRIPTION	LENGTH		REMARKS	WEIGHT TOTAL	ADVANCE MILL #
	7	F-03.00EP1	EMBED PLATE				635	
	7	F-03.00EP1	PL5/8x16	2	8	A36	635	
	ONE	F-03.00EP2	EMBED PLATE				55	
	1	F-03.00EP2	PL5/8x11	2	4	A36	55	
	ONE	F-03.00EP3	EMBED PLATE				168	
	1	F-03.00EP3	PL5/8x13 5/8	2	6	A36	72	
	1	pl3732	PL5/8x18	2	6	A36	96	
	3	F-03.00EP4	EMBED PLATE				191	
	3	F-03.00EP4	PL5/8x12	2	6	A36	191	
	ONE	F-03.00EP5	EMBED PLATE				47	
	1	F-03.00EP5	PL5/8x12	1	10	A36	47	
	3	F-03.00EP6	EMBED PLATE				504	
	3	F-03.00EP6	PL5/8x13 5/8	2	6	A36	217	
	3	pl3732	PL5/8x18	2	6	A36	287	
	ONE	F-03.00EP7	EMBED PLATE				77	
	1	F-03.00EP7	PL5/8x12	3	0	A36	77	
			FIELD BOLTS					
	10		3/4 Dia HILTI HAS E-55	0	8	+1HD WASH		
			(6" EMBEDMENT)					
	5	F-03.00EP8	EMBED PLATE				255	
	5	F-03.00EP8	PL5/8x12	2	0	A36	255	
			FIELD BOLTS					
	40		3/4 Dia HILTI HAS E-55	0	8	+1HD WASH		
			(6" EMBEDMENT)					
	ONE	F-03.00EP9	EMBED PLATE				71	
	1	F-03.00EP9	PL5/8x16	2	1	A36	71	
			FIELD BOLTS					
	6		3/4 Dia HILTI HAS E-55	0	10	+1HD WASH		
			(6" EMBEDMENT)					
	ONE	F-03.00EP10	EMBED PLATE				116	
	1	F-03.00EP10	PL5/8x16	3	5	A36	116	
			FIELD BOLTS					
	10		3/4 Dia HILTI HAS E-55	0	10	+1HD WASH		
			(6" EMBEDMENT)					

Total weight : 2119

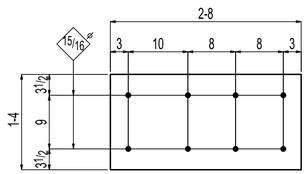

7 EMBED PLATES F-03.00EP1

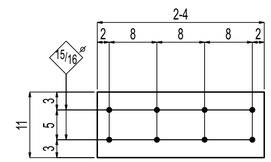

ONE EMBED PLATE F-03.00EP2

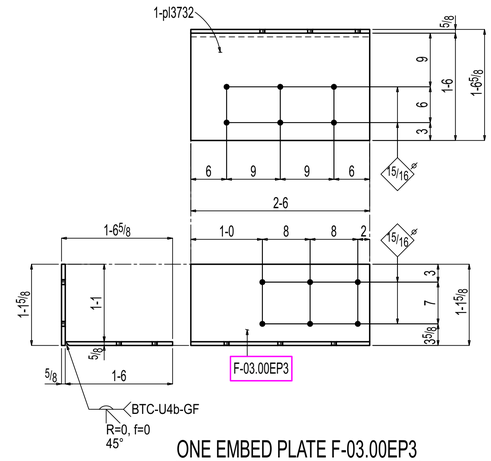

ONE EMBED PLATE F-03.00EP3

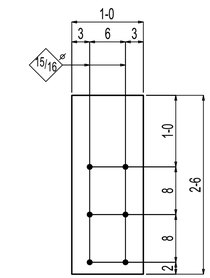

3 EMBED PLATES F-03.00EP4

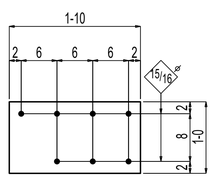

ONE EMBED PLATE F-03.00EP5

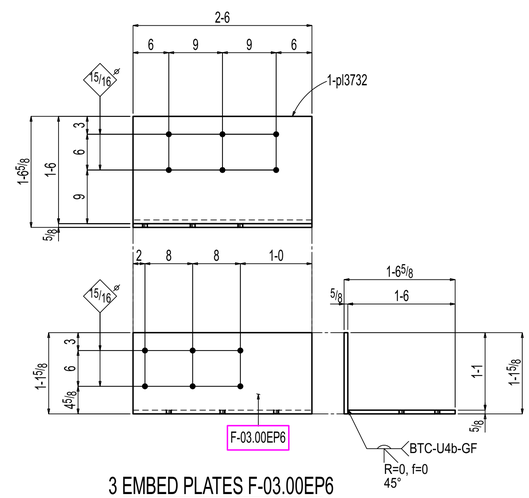

3 EMBED PLATES F-03.00EP6

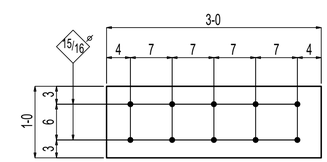

ONE EMBED PLATE F-03.00EP7

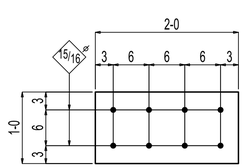

5 EMBED PLATES F-03.00EP8

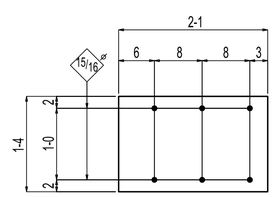

ONE EMBED PLATE F-03.00EP9

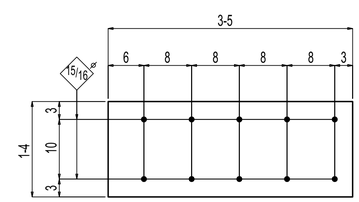

ONE EMBED PLATE F-03.00EP10

PAINT :NO PAINT
PREPARATION :SSPC-SP3

General Notes

*Structural steel shall conform to ASTM-A992.
*Structural SQR/RND.tubing conform to ASTM A500 Grade C
*Pipe shall conform to ASTM A53, Grade B.
*Channels, Angles and plates shall conform to A36.
*All bolts shall be 3/4" High strength in accordance with ASTM A325 (UNO)
*Welding Electrodes for Carbon steel :E70xx

# of Copies	Revision/ Issue	Destination	Date
5	1	Revised as noted	09-23-2025
4	0	For Fabrication	09-22-2025
3	C	For Re-Approval	08-22-2025
2	B	For Re-Approval	06-23-2025
1	A	For Approval	02-27-2025

IRON FABRICATION SERVICES, LLC.

3029 M. Street, NW, Suite 202
Washington, DC 20007
Tel: 202-800-5599
Fax: 202-478-0303

Project Name and Address
MARYLAND AVENUE

Location: **1250 MARYLAND AVENUE SW WASHINGTON, DC 20024**

Contractor:
BALFOUR BEATTY

Approved for Fabrication by:	Signature

Contract # **224009** Drawing # **F-03.00**

Contract Item: **EMBED PLATE**

Ref:
SOW - 03: E-03.00 - E-03.10

Date **01/ 23/ 2025**

Scale VARIES

Drawing Title:
EMBED PLATE DETAIL

BILL OF MATERIAL

LINE #	QTY TOTAL	PC MARK	DESCRIPTION	LENGTH		REMARKS	WEIGHT TOTAL	ADVANCE MILL #
	ONE	F-03.01C1	COLUMN				513	
	1	F-03.01C1	HSS8x8x1/2	8	7 1/2	S1E A500C	421	
	1	cp1001	PL1 1/4x10	2	2	A36	92	
			FIELD BOLTS					
	4		3/4 Dia HILTI KWIK HUS-EZ	0	7			
			SCREW ANCHOR					
	ONE	F-03.01C2	COLUMN				525	
	1	F-03.01C2	HSS8x8x1/2	8	10 3/8	S1E A500C	433	
	1	cp1001	PL1 1/4x10	2	2	A36	92	
			FIELD BOLTS					
	4		3/4 Dia HILTI KWIK HUS-EZ	0	7			
			SCREW ANCHOR					
	ONE	F-03.01C3	COLUMN				509	
	1	F-03.01C3	HSS8x8x1/2	8	6 1/2	S1E A500C	417	
	1	cp1001	PL1 1/4x10	2	2	A36	92	
			FIELD BOLTS					
	4		3/4 Dia HILTI KWIK HUS-EZ	0	7			
			SCREW ANCHOR					
	ONE	F-03.01C4	COLUMN				526	
	1	F-03.01C4	HSS8x8x1/2	8	10 5/8	S1E A500C	434	
	1	cp1001	PL1 1/4x10	2	2	A36	92	
			FIELD BOLTS					
	4		3/4 Dia HILTI KWIK HUS-EZ	0	7			
			SCREW ANCHOR					
	3	F-03.01C5	COLUMN				1876	
	3	F-03.01C5	HSS8x8x1/2	10	11	S1E A500C	1600	
	3	cp1001	PL1 1/4x10	2	2	A36	276	
			FIELD BOLTS					
	12		3/4 Dia HILTI KWIK HUS-EZ	0	7			
			SCREW ANCHOR					
	ONE	F-03.01C6	COLUMN				623	
	1	F-03.01C6	HSS8x8x1/2	10	10 1/2	S1E A500C	531	
	1	cp1001	PL1 1/4x10	2	2	A36	92	
			FIELD BOLTS					
	4		3/4 Dia HILTI KWIK HUS-EZ	0	7			
			SCREW ANCHOR					

Total weight : 4574

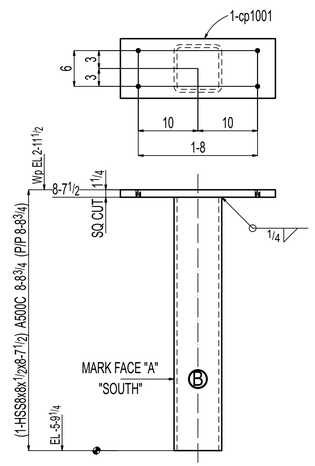

ONE COLUMN F-03.01C1

AT GRID:
C & 1.1

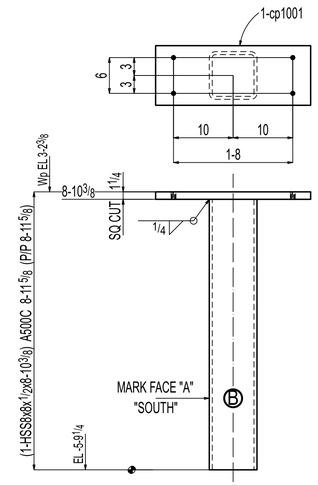

ONE COLUMN F-03.01C2

AT GRID:
B.1 & 1.1

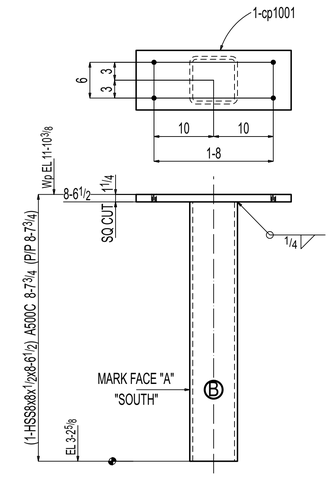

ONE COLUMN F-03.01C3

AT GRID:
C & 1.1

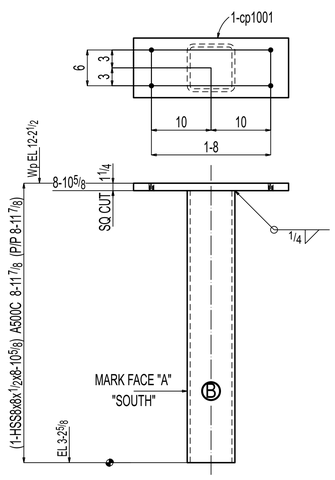

ONE COLUMN F-03.01C4

AT GRID:
B.1 & 1.1

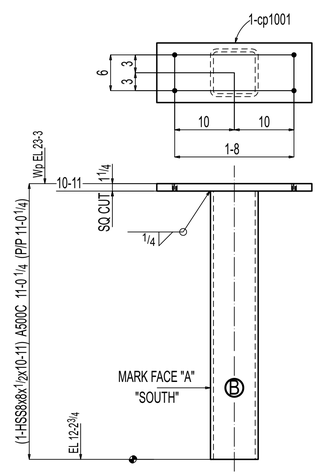

3 COLUMNS F-03.01C5

AT GRID:
C & 1.1
C & 1.1
B.2 & 1.1

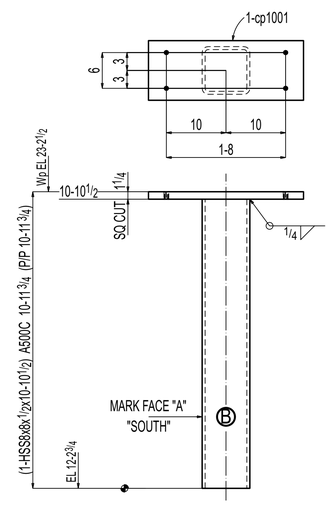

ONE COLUMN F-03.01C6

AT GRID:
B.1 & 1.1

PAINT :NO PAINT
PREPARATION :SSPC-SP3

General Notes

*Structural steel shall conform to ASTM-A992.
*Structural SQR/RND.tubing conform to ASTM A500 Grade C
*Pipe shall conform to ASTM A53, Grade B.
*Channels, Angles and plates shall conform to A36.
*All bolts shall be 3/4" High strength in accordance with ASTM A325 (UNO)
*Welding Electrodes for Carbon steel :E70xx

# of Copies	Revision/ Issue	Destination	Date
6	2	Revised as noted	09-25-2025
5	1	Revised as noted	09-23-2025
4	0	For Fabrication	09-22-2025
3	C	For Re-Approval	08-22-2025
2	B	For Re-Approval	06-23-2025
1	A	For Approval	02-27-2025

IRON FABRICATION SERVICES, LLC.

3029 M. Street, NW, Suite 202
Washington, DC 20007
Tel: 202-800-5599
Fax: 202-478-0303

Project Name and Address
MARYLAND AVENUE

Location: **1250 MARYLAND AVENUE SW WASHINGTON, DC 20024**

Contractor:
BALFOUR BEATTY

Approved for Fabrication by:	Signature

Contract # **224009** Drawing # **F-03.01**

Contract Item: **COLUMN**

Ref:
SOW - 03: E-03.00 - E-03.10

Date **01/ 23/ 2025**

Drawing Title: **COLUMN DETAIL**

Scale VARIES

BILL OF MATERIAL

LINE #	QTY TOTAL	PC MARK	DESCRIPTION	LENGTH		REMARKS	WEIGHT TOTAL	ADVANCE MILL #
	ONE	F-03.02C1	COLUMN				600	
	1	F-03.02C1	HSS8x8x1/2	10	7 3/8	S2E A500C	519	
	1	bp1000	PL1 1/4x10	1	6	A36	64	
	1	cp1000	PL5/8x10	0	10	A36	18	
			FIELD BOLTS					
	4		3/4 Dia HILTI HAS V-36	0	8	+1HD WASH		
			w/ HILTI HY-200 EPOXY			(3" EMBEDMENT)		
	ONE	F-03.02C2	COLUMN				607	
	1	F-03.02C2	HSS8x8x1/2	12	4	A500C	602	
	1	a738	L4x4x5/16	0	7	A36	5	
	ONE	F-03.02C3	COLUMN				585	
	1	F-03.02C3	HSS8x8x1/2	10	3 11/16	S2E A500C	504	
	1	bp1000	PL1 1/4x10	1	6	A36	64	
	1	cp1000	PL5/8x10	0	10	A36	18	
			FIELD BOLTS					
	4		3/4 Dia HILTI HAS V-36	0	8	+1HD WASH		
			w/ HILTI HY-200 EPOXY			(3" EMBEDMENT)		
B	ONE	F-03.02C4	COLUMN				691	
	1	F-03.02C4	HSS8x8x1/2	11	6 1/4	S2E A500C	563	
	1	a738	L4x4x5/16	0	7	A36	5	
	1	pl3738	PL1 1/4x13	1	1	A36	60	
	1	bp1001	PL1 1/4x10	1	6	A36	64	
			FIELD BOLTS					
	4		3/4 Dia HILTI HAS V-36	0	10	+1HD WASH		
			w/ HILTI HY-200 EPOXY			(4" EMBEDMENT)		
	3		3/4 Dia HILTI KWIK HUS	0	7			
			SCREW ANCHOR					
	2	F-03.02C5	COLUMN				960	
	2	F-03.02C5	HSS8x8x1/2	8	1 7/8	S2E A500C	797	
	2	bp1000	PL1 1/4x10	1	6	A36	128	
	2	cp1000	PL5/8x10	0	10	A36	35	
			FIELD BOLTS					
	8		3/4 Dia HILTI HAS V-36	0	8	+1HD WASH		
			w/ HILTI HY-200 EPOXY			(3" EMBEDMENT)		
	ONE	F-03.02C6	COLUMN				481	
	1	F-03.02C6	HSS8x8x1/2	8	2 1/8	S2E A500C	399	
	1	bp1000	PL1 1/4x10	1	6	A36	64	
	1	cp1000	PL5/8x10	0	10	A36	18	
			FIELD BOLTS					
	4		3/4 Dia HILTI HAS V-36	0	8	+1HD WASH		
			w/ HILTI HY-200 EPOXY			(3" EMBEDMENT)		

Total weight : 3925

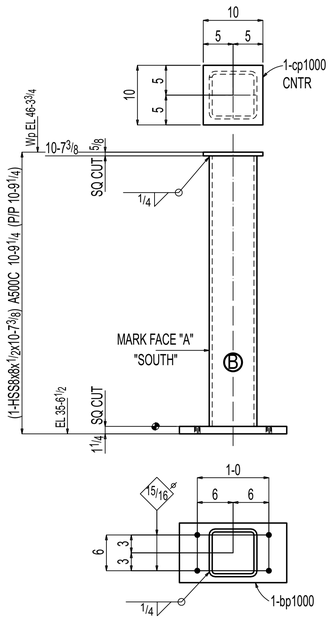

ONE COLUMN F-03.02C1

AT GRID:
C & 1.1

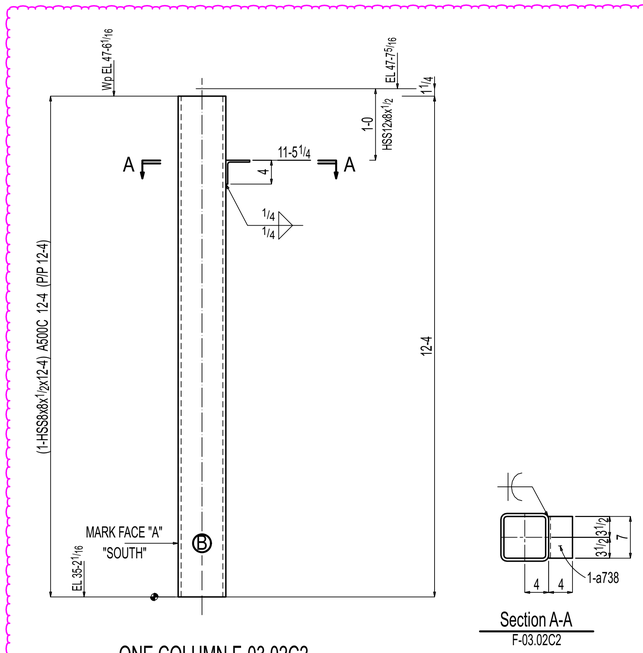

Section A-A
F-03.02C2

ONE COLUMN F-03.02C2

AT GRID:
B.1 & 1.1

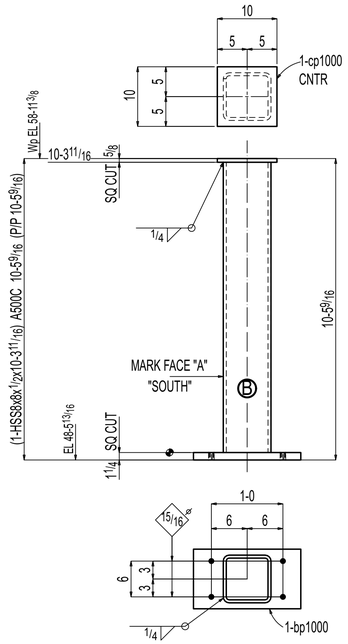

ONE COLUMN F-03.02C3

AT GRID:
C & 1.1

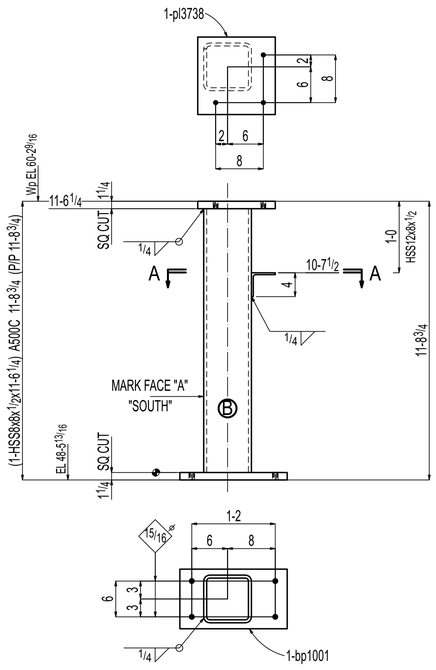

ONE COLUMN F-03.02C4

AT GRID:
B.1 & 1.1

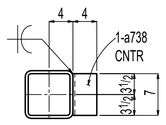

Section A-A
F-03.02C4

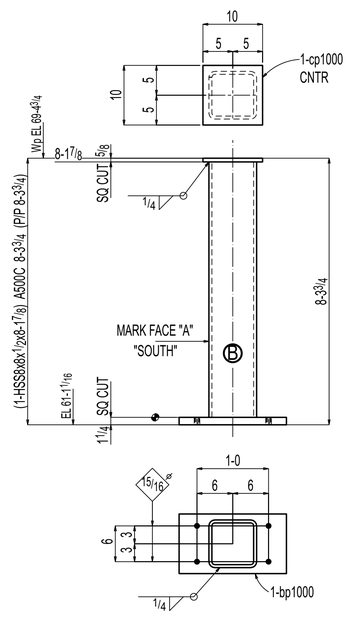

2 COLUMNS F-03.02C5

AT GRID:
C & 1.1
C & 1.1

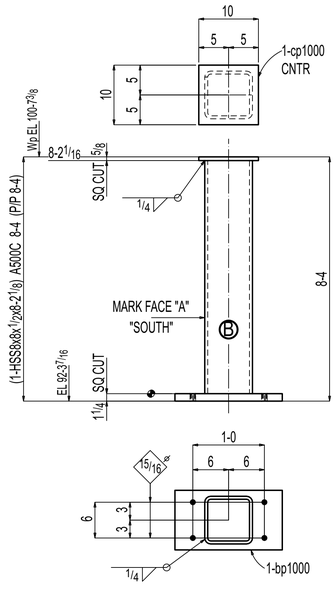

ONE COLUMN F-03.02C6

AT GRID:
C & 1.1

PAINT :NO PAINT
PREPARATION :SSPC-SP3

General Notes

*Structural steel shall conform to ASTM-A992.
*Structural SQR/RND.tubing conform to ASTM A500 Grade C
*Pipe shall conform to ASTM A53, Grade B.
*Channels, Angles and plates shall conform to A36.
*All bolts shall be 3/4" High strength in accordance with ASTM A325 (UNO)
*Welding Electrodes for Carbon steel :E70xx

# of Copies	Revision/ Issue	Destination	Date
5	1	Revised as noted	09-25-2025
4	0	For Fabrication	09-22-2025
3	C	For Re-Approval	08-22-2025
2	B	For Re-Approval	06-23-2025
1	A	For Approval	02-27-2025

IRON FABRICATION SERVICES, LLC.

3029 M. Street, NW, Suite 202
Washington, DC 20007
Tel: 202-800-5599
Fax: 202-478-0303

Project Name and Address
MARYLAND AVENUE

Location: **1250 MARYLAND AVENUE SW WASHINGTON, DC 20024**

Contractor:
BALFOUR BEATTY

Approved for Fabrication by:	Signature

Contract # **224009** Drawing # **F-03.02**

Contract Item: **COLUMN**

Ref:
SOW - 03: E-03.00 - E-03.10

Date **01/ 23/ 2025**

Drawing Title: **COLUMN DETAIL**

Scale VARIES

BILL OF MATERIAL

LINE #	QTY TOTAL	PC MARK	DESCRIPTION	LENGTH	REMARKS	WEIGHT TOTAL	ADVANCE MILL #
	ONE	F-03.03C1	COLUMN			586	
	1	F-03.03C1	HSS8x8x1/2	9 4 5/16	S2E A500C	457	
	1	a738	L4x4x5/16	0 7	A36	5	
	1	pl3738	PL1 1/4x13	1 1	A36	60	
	1	bp1001	PL1 1/4x10	1 6	A36	64	
			FIELD BOLTS				
	4		3/4 Dia HILTI HAS V-36	0 10	+1HD WASH		
			w/ HILTI HY-200 EPOXY		(4" EMBEDMENT)		
	3		3/4 Dia HILTI KWIK HUS-EZ	0 7			
			SCREW ANCHOR				
	ONE	F-03.03C2	COLUMN			475	
	1	F-03.03C2	HSS8x8x1/2	8 10 9/16	S2E A500C	393	
	1	bp1000	PL1 1/4x10	1 6	A36	64	
	1	cp1000	PL5/8x10	0 10	A36	18	
			FIELD BOLTS				
	4		3/4 Dia HILTI HAS V-36	0 8	+1HD WASH		
			w/ HILTI HY-200 EPOXY		(3" EMBEDMENT)		
	ONE	F-03.03C3	COLUMN			585	
	1	F-03.03C3	HSS8x8x1/2	9 4 1/4	S2E A500C	457	
	1	a738	L4x4x5/16	0 7	A36	5	
	1	pl3738	PL1 1/4x13	1 1	A36	60	
	1	bp1001	PL1 1/4x10	1 6	A36	64	
			FIELD BOLTS				
	4		3/4 Dia HILTI HAS V-36	0 10	+1HD WASH		
			w/ HILTI HY-200 EPOXY		(4" EMBEDMENT)		
	3		3/4 Dia HILTI KWIK HUS-EZ	0 7			
			SCREW ANCHOR				
	ONE	F-03.03C4	COLUMN			477	
	1	F-03.03C4	HSS8x8x1/2	8 1 1/16	S2E A500C	395	
	1	bp1000	PL1 1/4x10	1 6	A36	64	
	1	cp1000	PL5/8x10	0 10	A36	18	
			FIELD BOLTS				
	4		3/4 Dia HILTI HAS V-36	0 8	+1HD WASH		
			w/ HILTI HY-200 EPOXY		(3" EMBEDMENT)		

Total weight : 2122

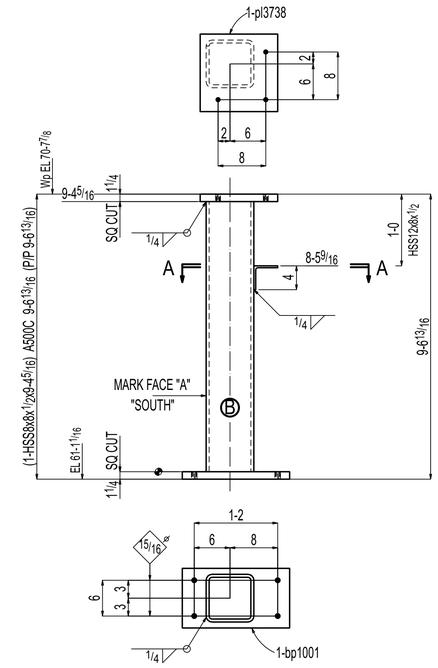

ONE COLUMN F-03.03C1

AT GRID:
B.1 & 1.1

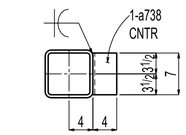

Section A-A
F-03.03C1

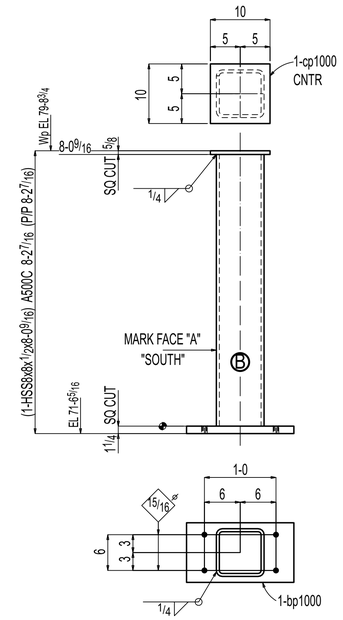

ONE COLUMN F-03.03C2

AT GRID:
C & 1.1

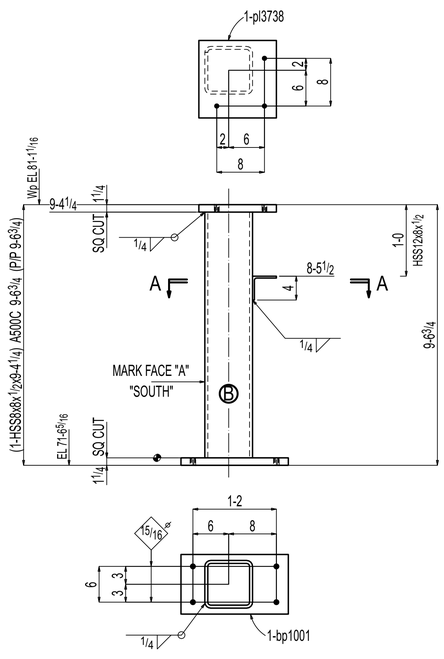

ONE COLUMN F-03.03C3

AT GRID:
B.1 & 1.1

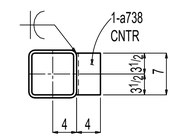

Section A-A
F-03.03C3

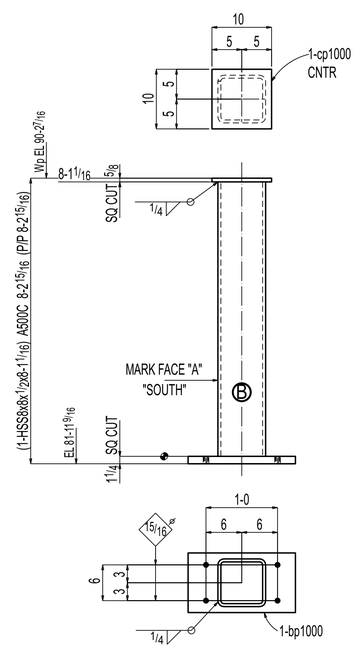

ONE COLUMN F-03.03C4

AT GRID:
C & 1.1

PAINT :NO PAINT
PREPARATION :SSPC-SP3

General Notes

*Structural steel shall conform to ASTM-A992.
*Structural SQR/RND.tubing conform to ASTM A500 Grade C
*Pipe shall conform to ASTM A53, Grade B.
*Channels, Angles and plates shall conform to A36.
*All bolts shall be 3/4" High strength in accordance with ASTM A325 (UNO)
*Welding Electrodes for Carbon steel :E70xx

# of Copies	Revision/ Issue	Destination	Date
4	0	For Fabrication	09-22-2025
3	C	For Re-Approval	08-22-2025
2	B	For Re-Approval	06-23-2025
1	A	For Approval	02-27-2025

IRON FABRICATION SERVICES, LLC.

3029 M. Street, NW, Suite 202
Washington, DC 20007
Tel: 202-800-5599
Fax: 202-478-0303

Project Name and Address
MARYLAND AVENUE

Location: **1250 MARYLAND AVENUE SW WASHINGTON, DC 20024**

Contractor:
BALFOUR BEATTY

Approved for Fabrication by:	Signature

Contract # **224009** Drawing # **F-03.03**

Contract Item: **COLUMN & BEAM**

Ref:
SOW - 03: E-03.00 - E-03.10

Date **01/ 23/ 2025**

Drawing Title: **COLUMN DETAIL**

Scale VARIES

BILL OF MATERIAL

LINE #	QTY TOTAL	PC MARK	DESCRIPTION	LENGTH	REMARKS	WEIGHT TOTAL	ADVANCE MILL #
	ONE	F-03.04C1	COLUMN			580	
	1	F-03.04C1	HSS8x8x1/2	9 2 7/8	S2E A500C	451	
	1	a738	L4x4x5/16	0 7	A36	5	
	1	pl3738	PL1 1/4x13	1 1	A36	60	
	1	bp1001	PL1 1/4x10	1 6	A36	64	
			FIELD BOLTS				
	4		3/4 Dia HILTI HAS V-36	0 10	+1HD WASH		
			w/ HILTI HY-200 EPOXY		(4" EMBEDMENT)		
	3		3/4 Dia HILTI KWIK HUS-EZ	0 7			
			SCREW ANCHOR				
	ONE	F-03.04C2	COLUMN			590	
	1	F-03.04C2	HSS8x8x1/2	9 5 3/8	S2E A500C	462	
	1	a738	L4x4x5/16	0 7	A36	5	
	1	pl3738	PL1 1/4x13	1 1	A36	60	
	1	bp1001	PL1 1/4x10	1 6	A36	64	
			FIELD BOLTS				
	4		3/4 Dia HILTI HAS V-36	0 10	+1HD WASH		
			w/ HILTI HY-200 EPOXY		(4" EMBEDMENT)		
	3		3/4 Dia HILTI KWIK HUS-EZ	0 7			
			SCREW ANCHOR				
	ONE	F-03.04C3	COLUMN			587	
	1	F-03.04C3	HSS8x8x1/2	9 4 9/16	S2E A500C	458	
	1	a738	L4x4x5/16	0 7	A36	5	
	1	pl3738	PL1 1/4x13	1 1	A36	60	
	1	bp1001	PL1 1/4x10	1 6	A36	64	
			FIELD BOLTS				
	4		3/4 Dia HILTI HAS V-36	0 10	+1HD WASH		
			w/ HILTI HY-200 EPOXY		(3" EMBEDMENT)		
	3		3/4 Dia HILTI KWIK HUS-EZ	0 7			
			SCREW ANCHOR				
	ONE	F-03.04C4	COLUMN			476	
	1	F-03.04C4	HSS8x8x1/2	8 1	S2E A500C	395	
	1	bp1000	PL1 1/4x10	1 6	A36	64	
	1	cp1000	PL5/8x10	0 10	A36	18	
			FIELD BOLTS				
	4		3/4 Dia HILTI HAS V-36	0 8	+1HD WASH		
			w/ HILTI HY-200 EPOXY		(3" EMBEDMENT)		

Total weight : 2233

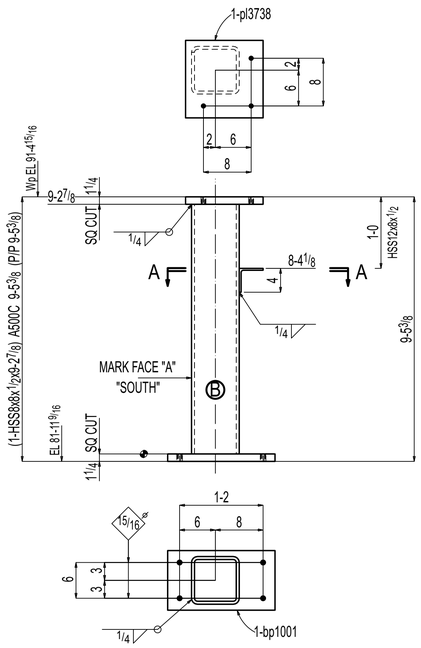

ONE COLUMN F-03.04C1

AT GRID:
B.1 & 1.1

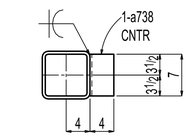

Section A-A
F-03.04C1

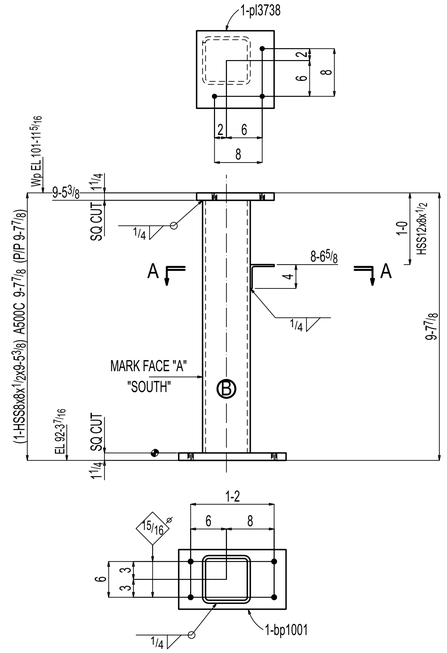

ONE COLUMN F-03.04C2

AT GRID:
B.1 & 1.1

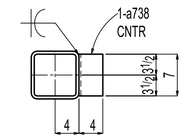

Section A-A
F-03.04C2

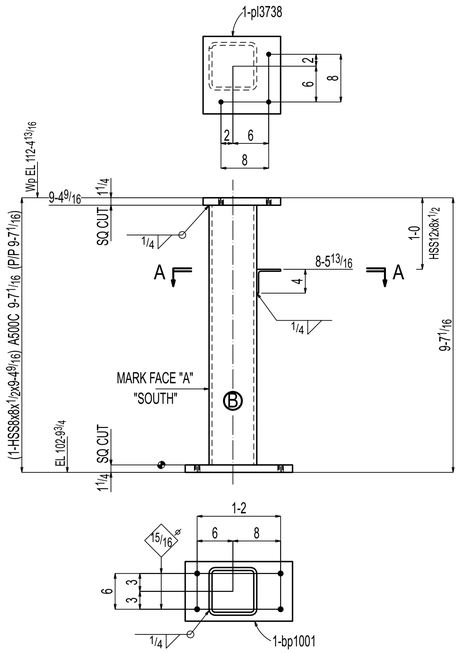

ONE COLUMN F-03.04C3

AT GRID:
B.1 & 1.1

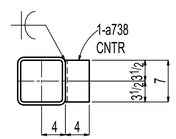

Section A-A
F-03.04C3

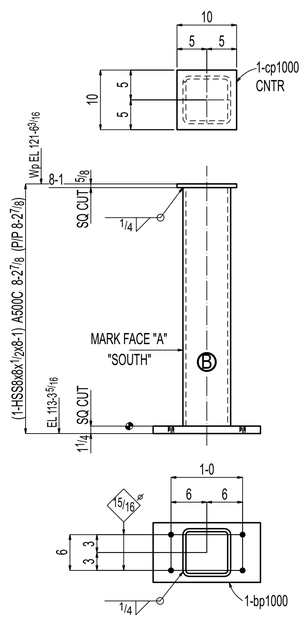

ONE COLUMN F-03.04C4

AT GRID:
C & 1.1

PAINT :NO PAINT
PREPARATION :SSPC-SP3

General Notes

*Structural steel shall conform to ASTM-A992.
*Structural SQR/RND.tubing conform to ASTM A500 Grade C
*Pipe shall conform to ASTM A53, Grade B.
*Channels, Angles and plates shall conform to A36.
*All bolts shall be 3/4" High strength in accordance with ASTM A325 (UNO)
*Welding Electrodes for Carbon steel :E70xx

# of Copies	Revision/ Issue	Destination	Date
4	0	For Fabrication	09-22-2025
3	C	For Re-Approval	08-22-2025
2	B	For Re-Approval	06-23-2025
1	A	For Approval	02-27-2025

IRON FABRICATION SERVICES, LLC.

3029 M. Street, NW, Suite 202
Washington, DC 20007
Tel: 202-800-5599
Fax: 202-478-0303

Project Name and Address
MARYLAND AVENUE

Location: **1250 MARYLAND AVENUE SW WASHINGTON, DC 20024**

Contractor:
BALFOUR BEATTY

Approved for Fabrication by:	Signature

Contract # **224009** Drawing # **F-03.04**

Contract Item: **COLUMN**

Ref:
SOW - 03: E-03.00 - E-03.10

Date **01/ 23/ 2025**

Drawing Title: **COLUMN DETAIL**

Scale VARIES

BILL OF MATERIAL

LINE #	QTY TOTAL	PC MARK	DESCRIPTION	LENGTH		REMARKS	WEIGHT TOTAL	ADVANCE MILL #
	ONE	F-03.05C1	COLUMN				585	
	1	F-03.05C1	HSS8x8x1/2	9	4 1/4	S2E A500C	457	
	1	a738	L4x4x5/16	0	7	A36	5	
	1	pl3738	PL1 1/4x13	1	1	A36	60	
	1	bp1001	PL1 1/4x10	1	6	A36	64	
			FIELD BOLTS					
	4		3/4 Dia HILTI HAS V-36	0	10	+1HD WASH		
			w/ HILTI HY-200 EPOXY			(4" EMBEDMENT)		
	3		3/4 Dia HILTI KWIK HUS-EZ	0	7			
			SCREW ANCHOR					
	ONE	F-03.05B1	BEAM				684	
	1	F-03.05B1	HSS12x8x1/2	10	6 1/8	A500C	656	
	1	pl1517	PL3/8x10 1/2	1	1 1/2	A36	15	
	1	pl472	PL1 1/4x6	1	0	A36	7	
	2	pl473	PL1 1/4x3 1/2	0	11 1/2	A36	6	
			FIELD BOLTS					
	2		3/4 Dia A325N	0	2	+1HD WASH		
	ONE	F-03.05B2	BEAM				2865	
	1	F-03.05B2	W10x100	28	6 1/8	A992	2851	
	2	a3514	L3 1/2x3x5/16	0	7	A36	8	
	1	bpl1994	PL3/8x6 13/16	0	6	BENT A36	4	
	2		3/4 Dia A325N	0	2 1/2	+1HD WASH	1	
	2	F-03.05B3	BEAM				511	
	2	F-03.05B3	HSS12x8x1/2	3	9 5/8	A500C	475	
	2	a2573	L4x4x1/4	0	4	A36	4	
	2	pl472	PL1 1/4x8	1	0	A36	14	
	2	pl3739	PL1 1/4x8	0	9 1/2	A36	11	
	2	pl2938	PL1 1/4x4 1/4	0	8	A36	5	
	2	pl665	PL1 1/4x2	0	8	A36	2	
	1							

Total weight : 4645

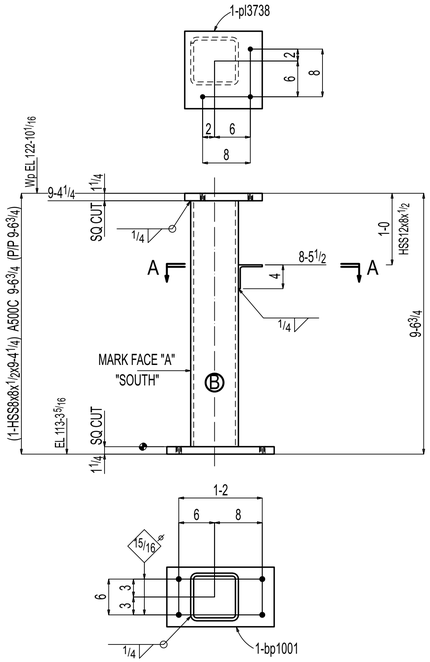

ONE COLUMN F-03.05C1

AT GRID:
B.1 & 1.1

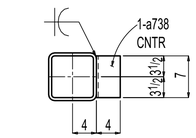

Section A-A
F-03.05C1

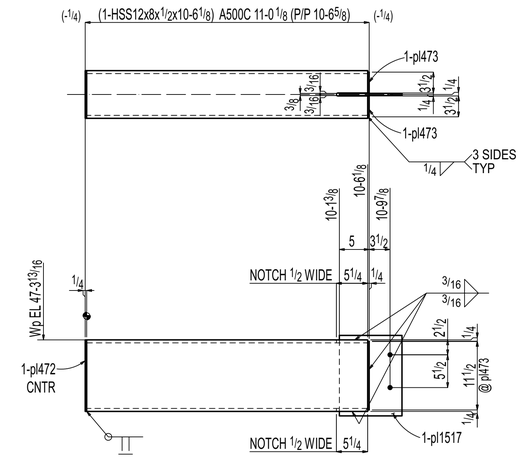

ONE BEAM F-03.05B1

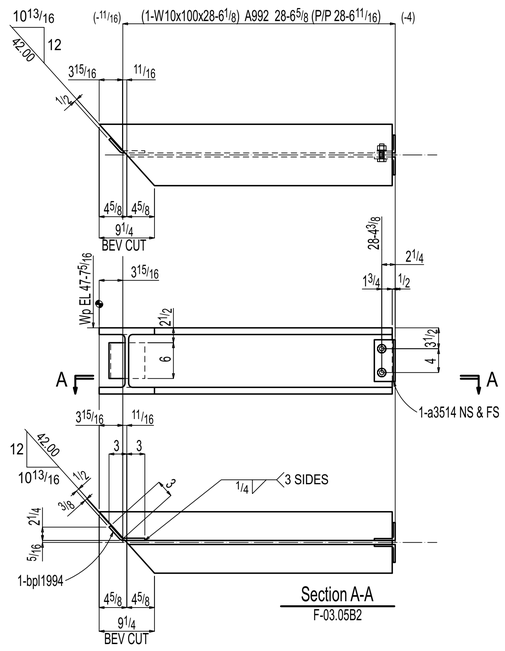

ONE BEAM F-03.05B2

SHOP BOLTS: 2-3/4Diax2 1/2 A325N	W	11 1/8x11/16
	F	10 5/16x1 1/8
	K	1 13/16x1 1/16

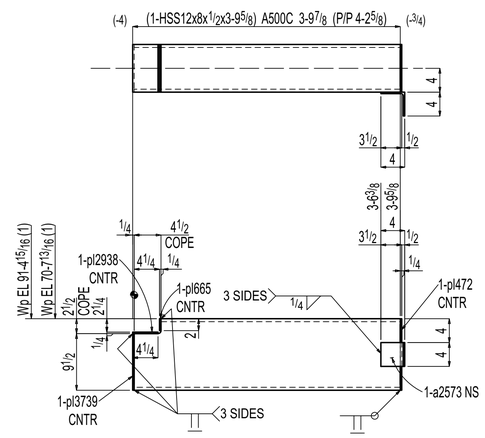

2 BEAMS F-03.05B3

PAINT :NO PAINT
PREPARATION :SSPC-SP3

General Notes

*Structural steel shall conform to ASTM-A992.
*Structural SQR/RND.tubing conform to ASTM A500 Grade C
*Pipe shall conform to ASTM A53, Grade B.
*Channels, Angles and plates shall conform to A36.
*All bolts shall be 3/4" High strength in accordance with ASTM A325 (UNO)
*Welding Electrodes for Carbon steel :E70xx

# of Copies	Revision/ Issue	Destination	Date
5	1	Revised as noted	09-25-2025
4	0	For Fabrication	09-22-2025
3	C	For Re-Approval	08-22-2025
2	B	For Re-Approval	06-23-2025
1	A	For Approval	02-27-2025

IRON FABRICATION SERVICES, LLC.

3029 M. Street, NW, Suite 202
Washington, DC 20007
Tel: 202-800-5599
Fax: 202-478-0303

Project Name and Address
MARYLAND AVENUE

Location: **1250 MARYLAND AVENUE SW WASHINGTON, DC 20024**

Contractor:
BALFOUR BEATTY

Approved for Fabrication by:	Signature

Contract # **224009** Drawing # **F-03.05**

Contract Item: **COLUMN & BEAM**

Ref:
SOW - 03: E-03.00 - E-03.10

Date **01/ 23/ 2025**

Drawing Title: **COLUMN & BEAM DETAIL**

Scale VARIES

BILL OF MATERIAL

LINE #	QTY TOTAL	PC MARK	DESCRIPTION	LENGTH		REMARKS	WEIGHT TOTAL	ADVANCE MILL #
	ONE	F-03.06B1	BEAM				1678	
	1	F-03.06B1	HSS12x8x1/2	26	5 1/8	A500C	1651	
	1	pl462	PL3/8x10 1/2	1	1 1/2	A36	15	
	1	pl472	PL1/4x8	1	0	A36	7	
	2	pl473	PL1/4x3 1/2	0	11 1/2	A36	6	
	ONE	F-03.06B2	BEAM				2846	
	1	F-03.06B2	W10x100	28	4 1/8	A992	2835	
	2	a1095	L3 1/2x3x5/16	0	5 1/2	A36	6	
	1	bpl1994	PL3/8x6 13/16	0	6	BENT A36	4	
	2		3/4 Dia A325N	0	2 1/2	+1HD WASH	1	
	ONE	F-03.06B3	BEAM				1728	
	1	F-03.06B3	HSS12x8x1/2	27	2 5/8	A500C	1700	
	1	pl462	PL3/8x10 1/2	1	1 1/2	A36	15	
	1	pl472	PL1/4x8	1	0	A36	7	
	2	pl473	PL1/4x3 1/2	0	11 1/2	A36	6	
	ONE	F-03.06B4	BEAM				2838	
	1	F-03.06B4	W10x100	28	3 1/8	A992	2826	
	2	a1095	L3 1/2x3x5/16	0	5 1/2	A36	6	
	1	bpl1994	PL3/8x6 13/16	0	6	BENT A36	4	
	2		3/4 Dia A325N	0	2 1/2	+1HD WASH	1	
	ONE	F-03.06B5	BEAM				258	
	1	F-03.06B5	HSS12x8x1/2	3	9 5/8	A500C	237	
	1	a2573	L4x4x1/4	0	4	A36	2	
	1	pl472	PL1/4x8	1	0	A36	7	
	1	pl3739	PL1/4x8	0	9 1/2	A36	5	
	1	pl3749	PL1/4x8	0	8 1/4	A36	5	
	1	pl665	PL1/4x2	0	8	A36	1	

Total weight : 9348

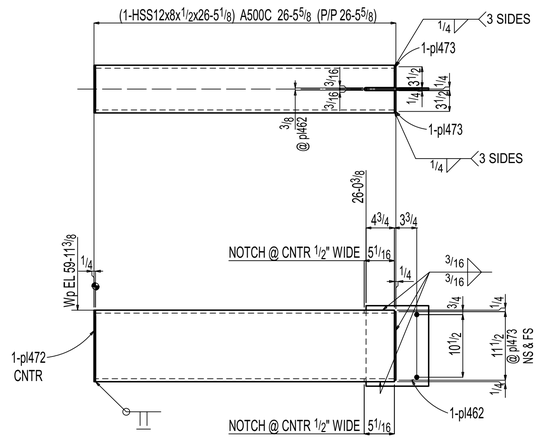

ONE BEAM F-03.06B1

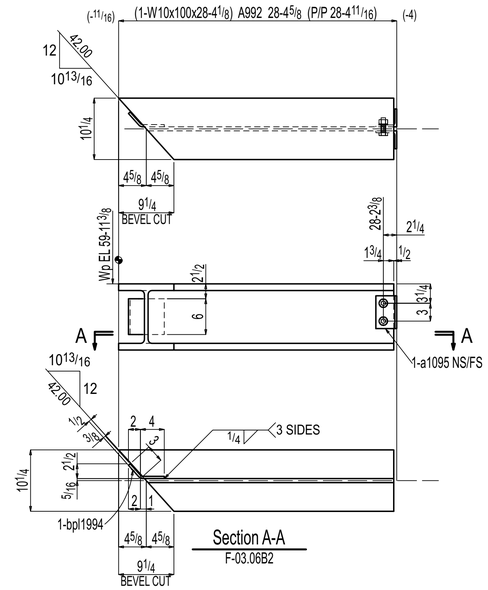

ONE BEAM F-03.06B2

W	11 1/8x11/16
F	10 5/16x1 1/8
K	1 13/16x1 1/16

SHOP BOLTS:
2-3/4Diax2 1/2 A325N

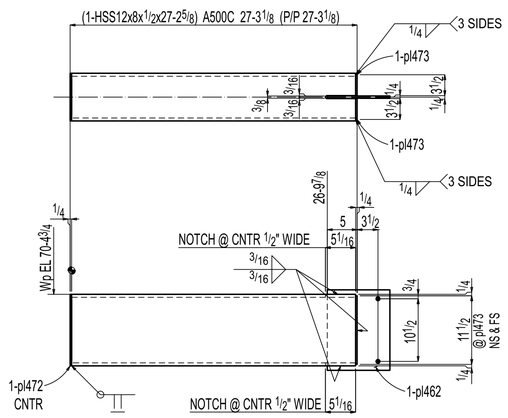

ONE BEAM F-03.06B3

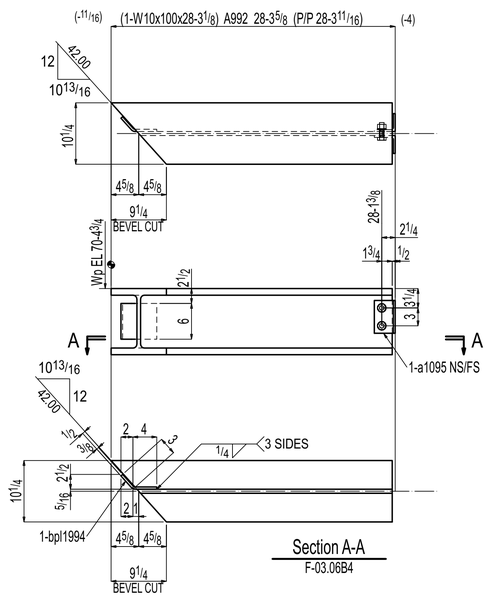

ONE BEAM F-03.06B4

W	11 1/8x11/16
F	10 5/16x1 1/8
K	1 13/16x1 1/16

SHOP BOLTS:
2-3/4Diax2 1/2 A325N

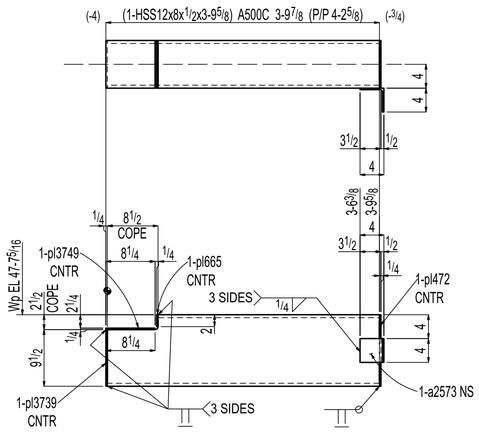

ONE BEAM F-03.06B5

PAINT :NO PAINT
PREPARATION :SSPC-SP3

General Notes

*Structural steel shall conform to ASTM-A992.
*Structural SQR/RND.tubing conform to ASTM A500 Grade C
*Pipe shall conform to ASTM A53, Grade B.
*Channels, Angles and plates shall conform to A36.
*All bolts shall be 3/4" High strength in accordance with ASTM A325 (UNO)
*Welding Electrodes for Carbon steel :E70xx

# of Copies	Revision/ Issue	Destination	Date
5	1	Revised as noted	09-25-2025
4	0	For Fabrication	09-22-2025
3	C	For Re-Approval	08-22-2025
2	B	For Re-Approval	06-23-2025
1	A	For Approval	02-27-2025

IRON FABRICATION SERVICES, LLC.

3029 M. Street, NW, Suite 202
Washington, DC 20007
Tel: 202-800-5599
Fax: 202-478-0303

Project Name and Address
MARYLAND AVENUE

Location: **1250 MARYLAND AVENUE SW WASHINGTON, DC 20024**

Contractor:
BALFOUR BEATTY

Approved for Fabrication by:	Signature

Contract # **224009** Drawing # **F-03.06**

Contract Item: **BEAM**

Ref:
SOW - 03: E-03.00 - E-03.10

Date **01/ 23/ 2025**

Drawing Title: **BEAM DETAIL**

Scale VARIES

BILL OF MATERIAL

LINE #	QTY TOTAL	PC MARK	DESCRIPTION	LENGTH		REMARKS	WEIGHT TOTAL	ADVANCE MILL #
	ONE	F-03.07B1	BEAM				1681	
	1	F-03.07B1	HSS12x8x1/2	26	5 5/8	A500C	1653	
	1	pl462	PL3/8x10 1/2	1	1 1/2	A36	15	
	1	pl472	PL1/4x8	1	0	A36	7	
	2	pl473	PL1/4x3 1/2	0	11 1/2	A36	6	
	ONE	F-03.07B2	BEAM				2830	
	1	F-03.07B2	W10x100	28	2 1/8	A992	2818	
	2	a1095	L3 1/2x3x5/16	0	5 1/2	A36	6	
	1	bpl1994	PL3/8x6 13/16	0	6	BENT A36	4	
	2		3/4 Dia A325N	0	2 1/2	+1HD WASH	1	
	2	F-03.07B3	BEAM				519	
	2	F-03.07B3	HSS12x8x1/2	3	10 3/8	A500C	483	
	2	a2573	L4x4x1/4	0	4	A36	4	
	2	pl472	PL1/4x8	1	0	A36	14	
	2	pl3739	PL1/4x8	0	9 1/2	A36	11	
	2	pl2938	PL1/4x4 1/4	0	8	A36	5	
	2	pl665	PL1/4x2	0	8	A36	2	
	ONE	F-03.07B4	BEAM				1671	
	1	F-03.07B4	HSS12x8x1/2	26	3 3/4	A500C	1643	
	1	pl462	PL3/8x10 1/2	1	1 1/2	A36	15	
	1	pl472	PL1/4x8	1	0	A36	7	
	2	pl473	PL1/4x3 1/2	0	11 1/2	A36	6	
	ONE	F-03.07B5	BEAM				2828	
	1	F-03.07B5	W10x100	28	1 7/8	A992	2816	
	2	a1095	L3 1/2x3x5/16	0	5 1/2	A36	6	
	1	bpl1994	PL3/8x6 13/16	0	6	BENT A36	4	
	2		3/4 Dia A325N	0	2 1/2	+1HD WASH	1	

Total weight : 9528

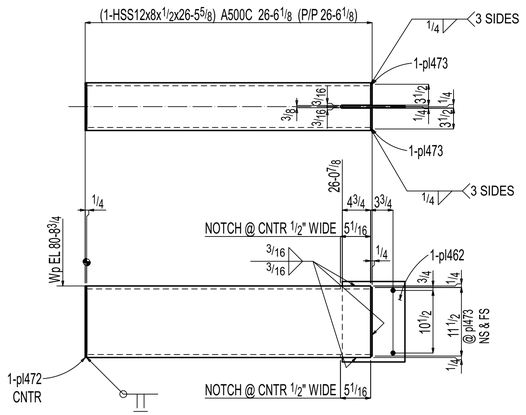

ONE BEAM F-03.07B1

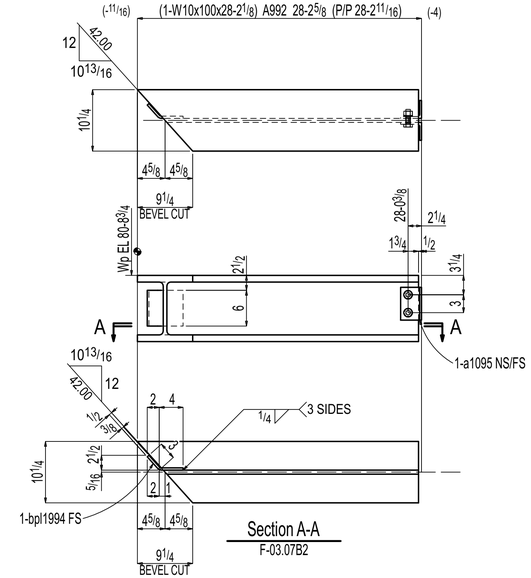

ONE BEAM F-03.07B2

W	11 1/8x11/16
F	10 5/16x1 1/8
K	1 13/16x1 1/16

SHOP BOLTS:
2-3/4Diax2 1/2 A325N

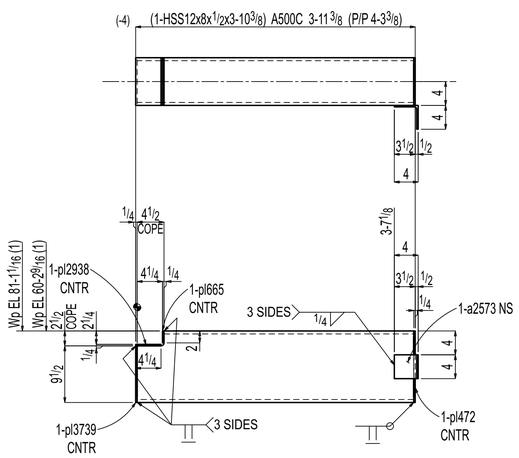

2 BEAMS F-03.07B3

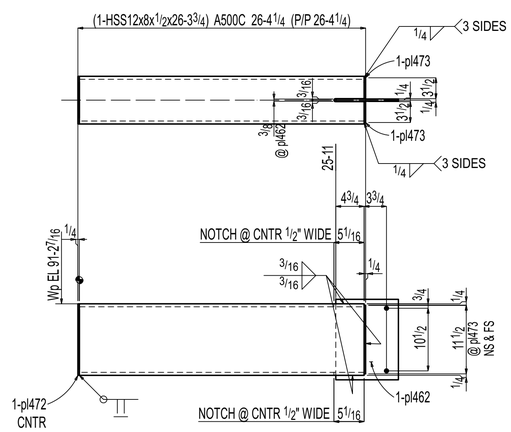

ONE BEAM F-03.07B4

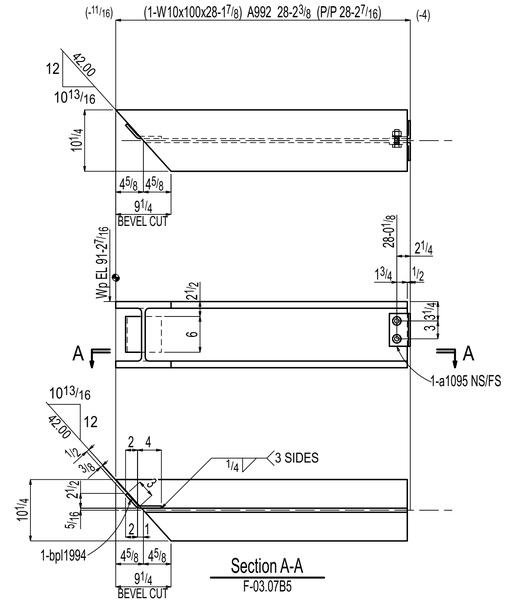

ONE BEAM F-03.07B5

W	11 1/8x11/16
F	10 5/16x1 1/8
K	1 13/16x1 1/16

SHOP BOLTS:
2-3/4Diax2 1/2 A325N

PAINT PREPARATION :NO PAINT :SSPC-SP3

General Notes

*Structural steel shall conform to ASTM-A992.
*Structural SQR/RND.tubing conform to ASTM A500 Grade C
*Pipe shall conform to ASTM A53, Grade B.
*Channels, Angles and plates shall conform to A36.
*All bolts shall be 3/4" High strength in accordance with ASTM A325 (UNO)
*Welding Electrodes for Carbon steel :E70xx

# of Copies	Revision/ Issue	Destination	Date
4	0	For Fabrication	09-22-2025
3	C	For Re-Approval	08-22-2025
2	B	For Re-Approval	06-23-2025
1	A	For Approval	02-27-2025

IRON FABRICATION SERVICES, LLC.

3029 M. Street, NW, Suite 202
Washington, DC 20007
Tel: 202-800-5599
Fax: 202-478-0303

Project Name and Address
MARYLAND AVENUE

Location: **1250 MARYLAND AVENUE SW WASHINGTON, DC 20024**

Contractor:
BALFOUR BEATTY

Approved for Fabrication by:	Signature

Contract # **224009** Drawing # **F-03.07**

Contract Item: **BEAM**

Ref:
SOW - 03: E-03.00 - E-03.10

Date **01/ 23/ 2025**

Drawing Title: **BEAM DETAIL**

Scale VARIES

BILL OF MATERIAL

LINE #	QTY TOTAL	PC MARK	DESCRIPTION	LENGTH		REMARKS	WEIGHT TOTAL	ADVANCE MILL #
	2	F-03.08B1	BEAM				3351	
	2	F-03.08B1	HSS12x8x1/2	26	4 5/8	A500C	3296	
	2	pl462	PL3/8x10 1/2	1	1 1/2	A36	30	
	2	pl472	PL1/4x8	1	0	A36	14	
	4	pl473	PL1/4x3 1/2	0	11 1/2	A36	11	
	ONE	F-03.08B2	BEAM				2836	
	1	F-03.08B2	W10x100	28	2 7/8	A992	2824	
	2	a1095	L3 1/2x3x5/16	0	5 1/2	A36	6	
	1	bpl1994	PL3/8x6 13/16	0	6	BENT A36	4	
	2		3/4 Dia A325N	0	2 1/2	+1HD WASH	1	
	ONE	F-03.08B3	BEAM				257	
	1	F-03.08B3	HSS12x8x1/2	3	10	A500C	239	
	1	a2573	L4x4x1/4	0	4	A36	2	
	1	pl472	PL1/4x8	1	0	A36	7	
	1	pl3739	PL1/4x8	0	9 1/2	A36	5	
	1	pl2938	PL1/4x4 1/4	0	8	A36	2	
	1	pl665	PL1/4x2	0	8	A36	1	
	ONE	F-03.08B4	BEAM				2713	
	1	F-03.08B4	W10x100	27	0 1/8	A992	2701	
	2	a1095	L3 1/2x3x5/16	0	5 1/2	A36	6	
	1	bpl1994	PL3/8x6 13/16	0	6	BENT A36	4	
	2		3/4 Dia A325N	0	2 1/2	+1HD WASH	1	
	ONE	F-03.08B5	BEAM				258	
	1	F-03.08B5	HSS12x8x1/2	3	10 1/8	A500C	240	
	1	a2573	L4x4x1/4	0	4	A36	2	
	1	pl472	PL1/4x8	1	0	A36	7	
	1	pl3739	PL1/4x8	0	9 1/2	A36	5	
	1	pl2938	PL1/4x4 1/4	0	8	A36	2	
	1	pl665	PL1/4x2	0	8	A36	1	

Total weight : 9416

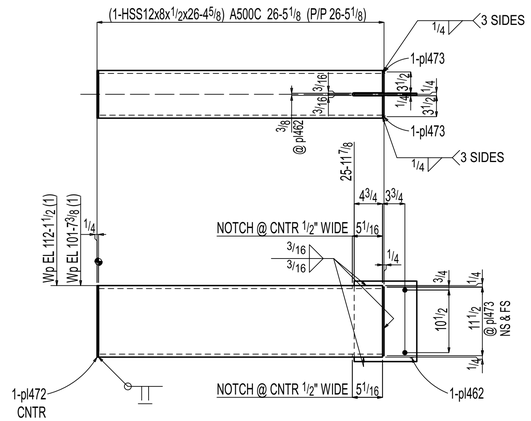

2 BEAMS F-03.08B1

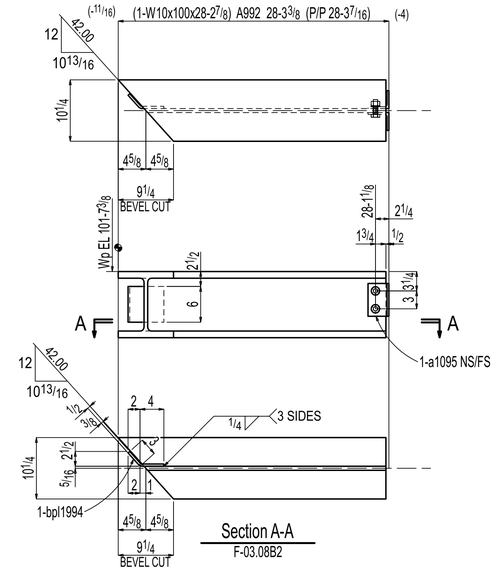

ONE BEAM F-03.08B2

W	11 1/8x11/16
F	10 5/16x1 1/8
K	1 13/16x11/16

SHOP BOLTS:
2-3/4Diax2 1/2 A325N

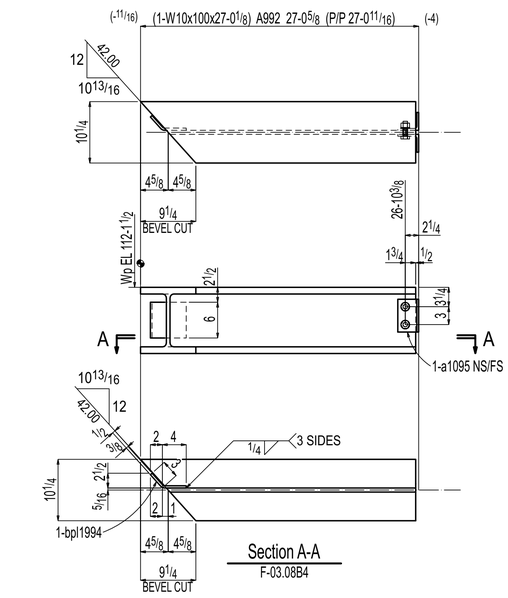

ONE BEAM F-03.08B4

W	11 1/8x11/16
F	10 5/16x1 1/8
K	1 13/16x11/16

SHOP BOLTS:
2-3/4Diax2 1/2 A325N

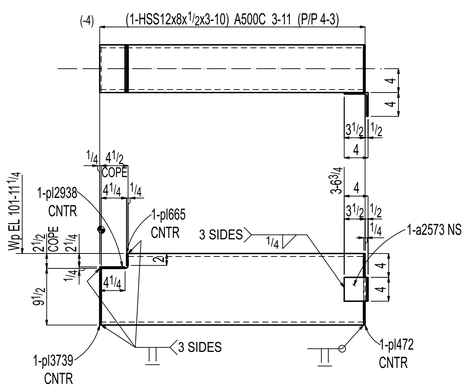

ONE BEAM F-03.08B3

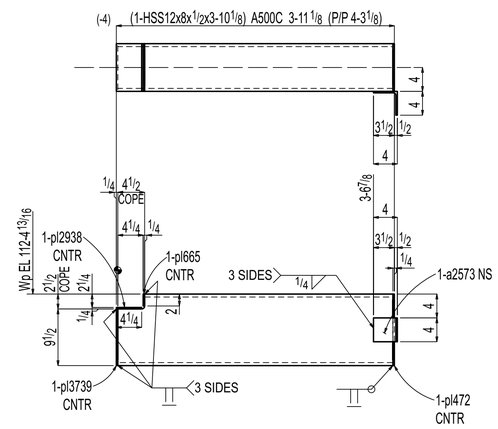

ONE BEAM F-03.08B5

PAINT :NO PAINT
PREPARATION :SSPC-SP3

General Notes

*Structural steel shall conform to ASTM-A992.
*Structural SQR/RND.tubing conform to ASTM A500 Grade C
*Pipe shall conform to ASTM A53, Grade B.
*Channels, Angles and plates shall conform to A36.
*All bolts shall be 3/4" High strength in accordance with ASTM A325 (UNO)
*Welding Electrodes for Carbon steel :E70xx

# of Copies	Revision/ Issue	Destination	Date
4	0	For Fabrication	09-22-2025
3	C	For Re-Approval	08-22-2025
2	B	For Re-Approval	06-23-2025
1	A	For Approval	02-27-2025

IRON FABRICATION SERVICES, LLC.

3029 M. Street, NW, Suite 202
Washington, DC 20007
Tel: 202-800-5599
Fax: 202-478-0303

Project Name and Address
MARYLAND AVENUE

Location: **1250 MARYLAND AVENUE SW WASHINGTON, DC 20024**

Contractor:
BALFOUR BEATTY

Approved for Fabrication by:	Signature

Contract # **224009** Drawing # **F-03.08**

Contract Item: **BEAM**

Ref:
SOW - 03: E-03.00 - E-03.10

Date **01/ 23/ 2025**

Drawing Title: **BEAM DETAIL**

Scale VARIES

BILL OF MATERIAL

LINE #	QTY TOTAL	PC MARK	DESCRIPTION	LENGTH		REMARKS	WEIGHT TOTAL	ADVANCE MILL #
	ONE	F-03.09B1	BEAM				1701	
	1	F-03.09B1	HSS12x8x1/2	26	9 1/2	A500C	1673	
	1	pl462	PL3/8x10 1/2	1	1 1/2	A36	15	
	1	pl472	PL1/4x8	1	0	A36	7	
	2	pl473	PL1/4x3 1/2	0	11 1/2	A36	6	
	ONE	F-03.09B2	BEAM				2173	
	1	F-03.09B2	W12x87	24	10 1/8	A992	2161	
	2	a1136	L3 1/2x3x5/16	0	9	A36	10	
	3		3/4 Dia A325N	0	2 1/4	+1HD WASH	2	
			FIELD BOLTS					
	3		3/4 Dia A325N	0	2	+1HD WASH		
	ONE	F-03.09B3	BEAM				335	
	1	F-03.09B3	HSS12x8x1/2	5	1 1/4	A500C	319	
	1	pl472	PL1/4x8	1	0	A36	7	
	1	pl3739	PL1/4x8	0	9 1/2	A36	5	
	1	pl2938	PL1/4x4 1/4	0	8	A36	2	
	1	pl665	PL1/4x2	0	8	A36	1	
	ONE	F-03.09B4	BEAM				447	
	1	F-03.09B4	W12x35	12	5 1/8	A992	435	
	2	a1136	L3 1/2x3x5/16	0	9	A36	10	
	3		3/4 Dia A325N	0	2 1/2	+1HD WASH	2	
			FIELD BOLTS					
	3		3/4 Dia A325N	0	1 3/4	+1HD WASH		
	ONE	F-03.09B5	BEAM				1326	
	1	F-03.09B5	HSS12x8x1/2	20	10 13/16	A500C	1305	
	1	pl462	PL3/8x10 1/2	1	1 1/2	A36	15	
	2	pl473	PL1/4x3 1/2	0	11 1/2	A36	6	
	ONE	F-03.09B6	BEAM				161	
	1	F-03.09B6	HSS6x6x3/8	5	9	A500C	158	
	1	pl680	PL1/4x6	0	6	A36	3	

Total weight : 6143

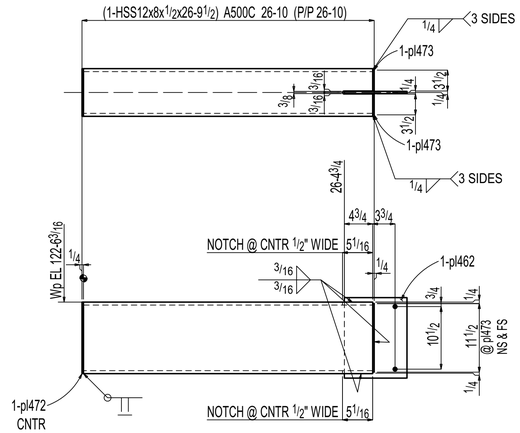

ONE BEAM F-03.09B1

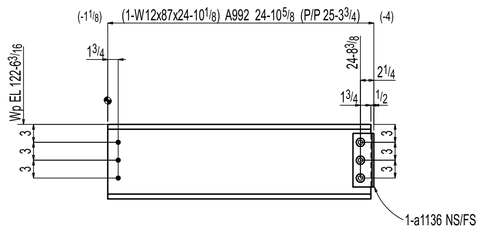

ONE BEAM F-03.09B2

W	12 1/2x1/2
F	12 1/8x13/16
K	11 11/16x1 1/8

SHOP BOLTS:
3-3/4Diax2 1/4 A325N

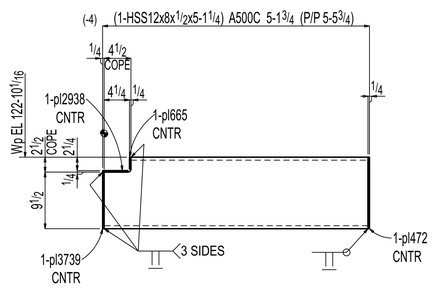

ONE BEAM F-03.09B3

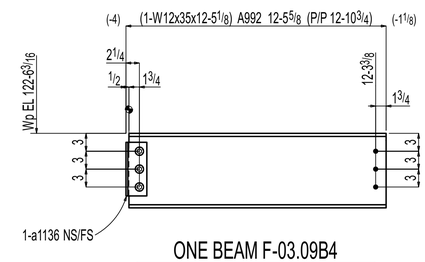

ONE BEAM F-03.09B4

W	12 1/2x5/16
F	6 9/16x1/2
K	1 3/16x13/16

SHOP BOLTS:
3-3/4Diax2 1/2 A325N

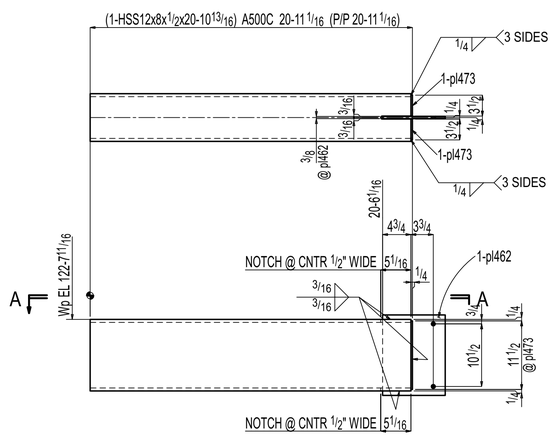

ONE BEAM F-03.09B5

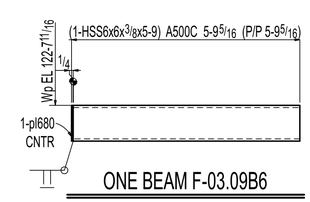

ONE BEAM F-03.09B6

PAINT :NO PAINT
PREPARATION :SSPC-SP3

General Notes

*Structural steel shall conform to ASTM-A992.
*Structural SQR/RND.tubing conform to ASTM A500 Grade C
*Pipe shall conform to ASTM A53, Grade B.
*Channels, Angles and plates shall conform to A36.
*All bolts shall be 3/4" High strength in accordance with ASTM A325 (UNO)
*Welding Electrodes for Carbon steel :E70xx

# of Copies	Revision/ Issue	Destination	Date
4	0	For Fabrication	09-22-2025
3	C	For Re-Approval	08-22-2025
2	B	For Re-Approval	06-23-2025
1	A	For Approval	02-27-2025

IRON FABRICATION SERVICES, LLC.

3029 M. Street, NW, Suite 202
Washington, DC 20007
Tel: 202-800-5599
Fax: 202-478-0303

Project Name and Address
MARYLAND AVENUE

Location: **1250 MARYLAND AVENUE SW WASHINGTON, DC 20024**

Contractor:
BALFOUR BEATTY

Approved for Fabrication by:	Signature

Contract # **224009** Drawing # **F-03.09**

Contract Item: **BEAM**

Ref:
SOW - 03: E-03.00 - E-03.10

Date **01/ 23/ 2025**

Scale VARIES

Drawing Title: **BEAM DETAIL**

BILL OF MATERIAL

LINE #	QTY TOTAL	PC MARK	DESCRIPTION	LENGTH	REMARKS	WEIGHT TOTAL	ADVANCE MILL #
	ONE	F-03.11M1	WT			183	
	1	F-03.11M1	WT7x26.5	6 10 7/8	A992	183	
	ONE	F-03.11M2	HSS			389	
	1	F-03.11M2	HSS8x6x1/2	9 1 3/4	A500C	385	
	2	pl1608	PL1/4x3 1/2	0 8	A36	4	
	ONE	F-03.11M3	HSS			19	
	1	F-03.11M3	HSS3 1/2x1 1/2x1/4	2 7	A500C	18	
	1	pl1550	PL1/4x1 1/2	0 3 1/2	A36	0	
	ONE	F-03.11M4	HSS			93	
	1	F-03.11M4	HSS6x6x3/8	3 4 3/4	A500C	93	
	ONE	F-03.11M5	HSS			515	
	1	F-03.11M5	HSS5x3x1/2	23 9	A500C	514	
	1	pl470	PL1/4x3	0 5	A36	1	
	6	F-03.11M6	HSS			3064	
	6	F-03.11M6	HSS5x3x1/2	23 6 1/8	A500C	3051	
	12	pl470	PL1/4x3	0 5	A36	13	
	ONE	F-03.11M7	PLATE			21	
	1	F-03.11M7	PL1/2x6	0 9	A36	8	
	1	pl3740	PL1/2x9	0 10 1/2	A36	13	
	6	F-03.11M8	PLATE			174	
	6	F-03.11M8	PL1/2x6	1 0	A36	61	
	12	pl658	PL1/2x6	0 11	A36	112	
	7	F-03.11M9	PLATE			219	
	7	F-03.11M9	PL1/2x5	1 4	A36	79	
	7	pl3056	PL1/2x5	0 11 1/4	A36	56	
	14	pl3057	PL3/8x5	0 11 1/4	A36	84	
	2	F-03.11P1	PLATE			113	
	2	F-03.11P1	PL1 1/4x10	1 4	A36	113	
			FIELD BOLTS				
	8		3/4 Dia HILTI HAS V-36 w/ HILTI HY-200 EPOXY	0 10	+1HD WASH (4 3/4" EMBEDMENT)		
	7	F-03.11P2	PLATE			447	
	7	F-03.11P2	PL1 1/4x10	1 6	A36	447	
			FIELD BOLTS				
	28		3/4 Dia HILTI HAS V-36 w/ HILTI HY-200 EPOXY	0 8	+1HD WASH (3" EMBEDMENT)		
	8	F-03.11P3	PLATE			567	
	8	F-03.11P3	PL5/8x20	1 8	A36	567	
	2	F-03.11P4	PLATE			23	
	2	F-03.11P4	PL1/4x10	1 4	A36	23	
	ONE	F-03.11P5	PLATE			1	
	1	F-03.11P5	PL1/4x3	0 5	A36	1	
	ONE	F-03.11P6	PLATE			0	
	1	F-03.11P6	PL1/4x1 1/2	0 3 1/2	A36	0	

Total weight : 5827

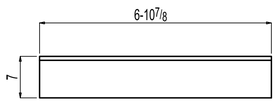

ONE WT F-03.11M1

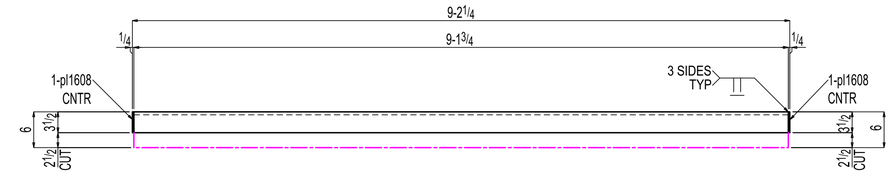

ONE HSS F-03.11M2

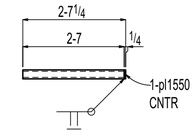

ONE HSS F-03.11M3

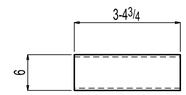

ONE HSS F-03.11M4

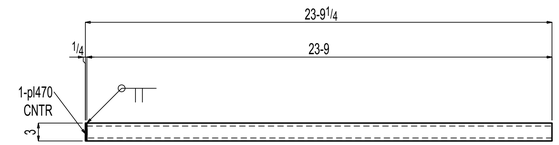

ONE HSS F-03.11M5

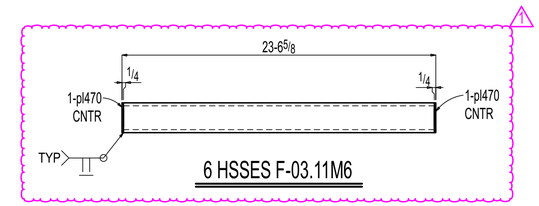

6 HSSES F-03.11M6

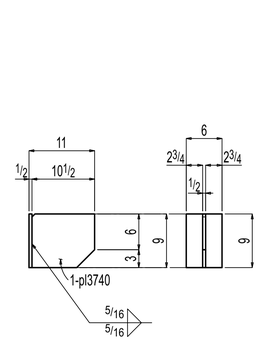

ONE PLATE F-03.11M7

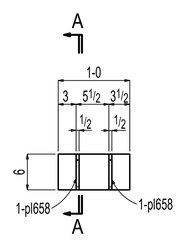

6 PLATES F-03.11M8

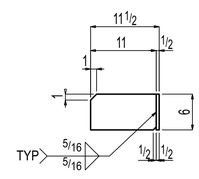

Section A-A
F-03.11M8

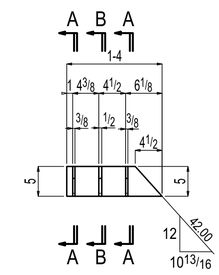

7 PLATES F-03.11M9

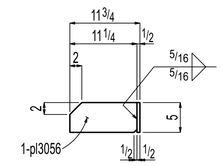

Section B-B
F-03.11M9

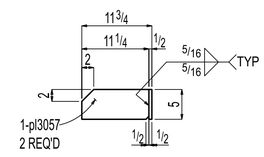

Section A-A
F-03.11M9

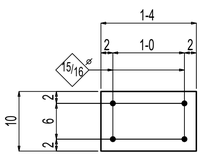

2 PLATES F-03.11P1

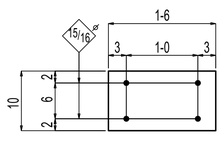

7 PLATES F-03.11P2

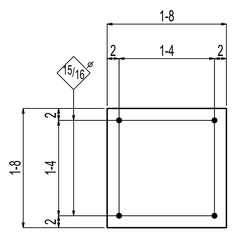

8 PLATES F-03.11P3

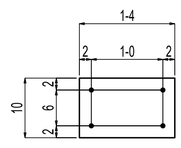

2 PLATES F-03.11P4

ONE PLATE F-03.11P5

ONE PLATE F-03.11P6

General Notes

*Structural steel shall conform to ASTM-A992.
*Structural SQR/RND.tubing conform to ASTM A500 Grade C
*Pipe shall conform to ASTM A53, Grade B.
*Channels, Angles and plates shall conform to A36.
*All bolts shall be 3/4" High strength in accordance with ASTM A325 (UNO)
*Welding Electrodes for Carbon steel :E70xx

# of Copies	Revision/ Issue	Destination	Date
4	1	Revised as noted	09-25-2025
3	0	For Fabrication	09-22-2025
2	B	NOT IN USE	08-22-2025
1	A	For Approval	06-23-2025

IRON FABRICATION SERVICES, LLC.

3029 M. Street, NW, Suite 202
Washington, DC 20007
Tel: 202-800-5599
Fax: 202-478-0303

Project Name and Address
MARYLAND AVENUE

Location: **1250 MARYLAND AVENUE SW WASHINGTON, DC 20024**

Contractor:
BALFOUR BEATTY

Approved for Fabrication by:	Signature

Contract # **224009** | Drawing # **F-03.11**

Contract Item: **PLATE,HSS & WT**

Ref:
SOW - 03: E-03.00 - E-03.10

Date **01/ 23/ 2025**

Drawing Title: **MISCELLANEOUS DETAIL**

Scale VARIES

BILL OF MATERIAL

LINE #	QTY TOTAL	PC MARK	DESCRIPTION	LENGTH		REMARKS	WEIGHT TOTAL	ADVANCE MILL #
	15	F-03.12P1	PLATE				191	
	15	F-03.12P1	PL1/4x10	1	6	A36	191	
	7	F-03.12P2	EMBED PLATE				89	
	7	F-03.12P2	PL1/4x10	1	6	A36	89	
	ONE	F-03.12P3	PLATE				6	
	1	F-03.12P3	PL3/8x6	0	9 1/2	A36	6	
	8	F-03.12P4	PLATE				69	
	8	F-03.12P4	PL3/8x6	1	1 1/2	A36	69	
			FIELD BOLTS					
	16		3/4 Dia A325N	0	2	+1HD WASH		
	6	F-03.12P5	PLATE				20	
	6	F-03.12P5	PL3/8x3 3/4	0	8 1/2	A36	20	
	2	F-03.12P6	PLATE				14	
	2	F-03.12P6	PL3/8x6	0	11	A36	14	
			FIELD BOLTS					
	4		3/4 Dia A325N	0	2	+1HD WASH		
	ONE	F-03.12P7	PLATE				204	
	1	F-03.12P7	PL1 1/4x24	2	0	A36	204	
	8	F-03.12A1	ANGLE				99	
	8	F-03.12A1	L6x6x5/16	1	0	A36	99	
			FIELD BOLTS					
	16		3/4"Ø HILTI KB-TZ2	0	5 1/2	+1HD WASH		
	ONE	F-03.12M1	PLATE				16	
	1	F-03.12M1	PL1/2x6	0	8	A36	7	
	1	pl3742	PL1/2x8	0	8	A36	9	
	ONE	F-03.12M2	PLATE				29	
	1	F-03.12M2	PL1/2x6	1	0	A36	10	
	2	pl658	PL1/2x6	0	11	A36	19	
	151	F-03.12M3	THREADED ROD				199	
	151	F-03.12M3	3/4"Ø THREADED ROD	0	10 1/2	F1554 GR. 55	199	
	151		3/4 NUT			HHNT A563		
	151		3/4 WASH			HD F436		
	18	F-03.12M4	THREADED ROD				15	
	18	F-03.12M4	3/4"Ø THREADED ROD	0	6 1/2	F1554 GR. 55	15	
	18		3/4 NUT			HHNT A563		
	18		3/4 WASH			HD F436		
	ONE	F-03.12M5	WT				82	
	1	F-03.12M5	WT7x26.5	3	1	A992	82	

Total weight : 1033

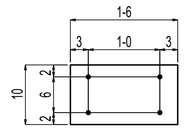

15 PLATES F-03.12P1

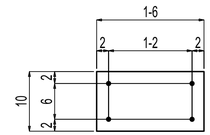

7 EMBED PLATES F-03.12P2

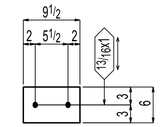

ONE PLATE F-03.12P3

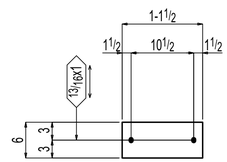

8 PLATES F-03.12P4

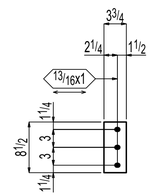

6 PLATES F-03.12P5

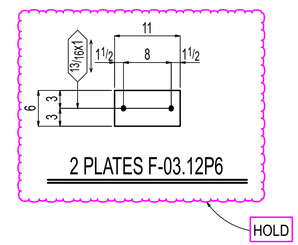

2 PLATES F-03.12P6

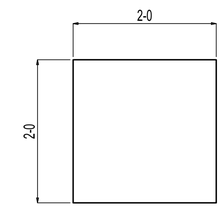

ONE PLATE F-03.12P7

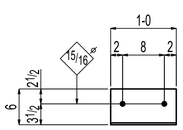

8 ANGLES F-03.12A1

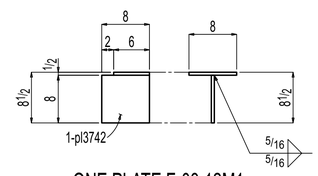

ONE PLATE F-03.12M1

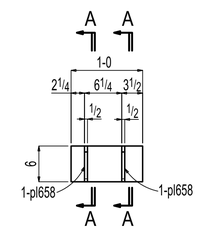

ONE PLATE F-03.12M2

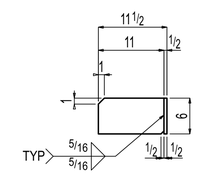

Section A-A
F-03.12M2

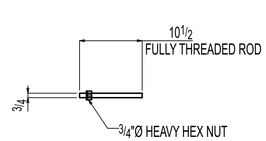

151 THREADED RODS F-03.12M3

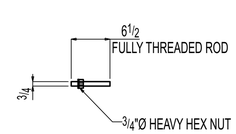

18 THREADED RODS F-03.12M4

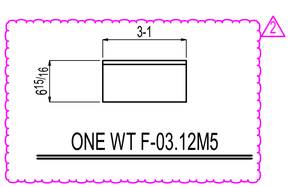

ONE WT F-03.12M5

General Notes

*Structural steel shall conform to ASTM-A992.
*Structural SQR/RND.tubing conform to ASTM A500 Grade C
*Pipe shall conform to ASTM A53, Grade B.
*Channels, Angles and plates shall conform to A36.
*All bolts shall be 3/4" High strength in accordance with ASTM A325 (UNO)
*Welding Electrodes for Carbon steel :E70xx

# of Copies	Revision/ Issue	Destination	Date
5	2	Revised as noted	09-25-2025
4	1	Revised as noted	09-23-2025
3	0	For Fabrication	09-22-2025
2	B	NOT IN USE	08-22-2025
1	A	For Approval	06-23-2025

IRON FABRICATION SERVICES, LLC.

3029 M. Street, NW, Suite 202
Washington, DC 20007
Tel: 202-800-5599
Fax: 202-478-0303

Project Name and Address
MARYLAND AVENUE

Location: **1250 MARYLAND AVENUE SW WASHINGTON, DC 20024**

Contractor:
BALFOUR BEATTY

Approved for Fabrication by:	Signature

Contract # **224009** Drawing # **F-03.12**

Contract Item: **PLATE & ANGLE**

Ref:
SOW - 03: E-03.00 - E-03.10

Date **01/ 23/ 2025**

Drawing Title: **MISCELLANEOUS DETAIL**

Scale VARIES