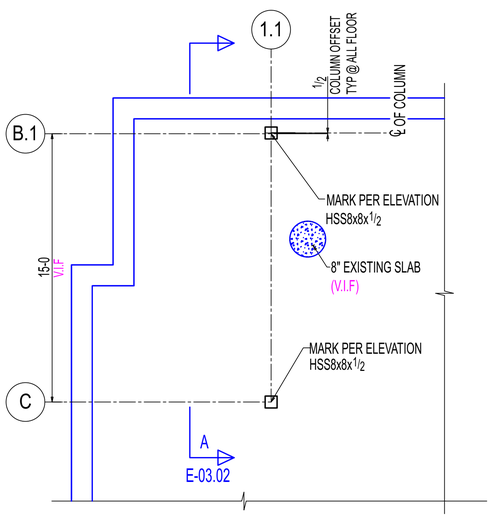

SOW-03 SOUTH WEST FRAMING TYP@ LEVEL-P4 TO COURTYARD LEVEL

(REF: S101 & A051)

NOTE:
1.REFER ELEVATION VIEW ON E-03.02 FOR TOP OF STEEL ELEVATION.
2.SEE ELEVATION VIEWS ON E-03.02 FOR MEMBER PIECEMARK.
3.ALL V.I.F NOTED DIMESNIONS NEEDS TO BE VERIFIED IN FIELD BEFORE FABRICATION OF MEMBER IN THIS AREA.

PROJECT NORTH

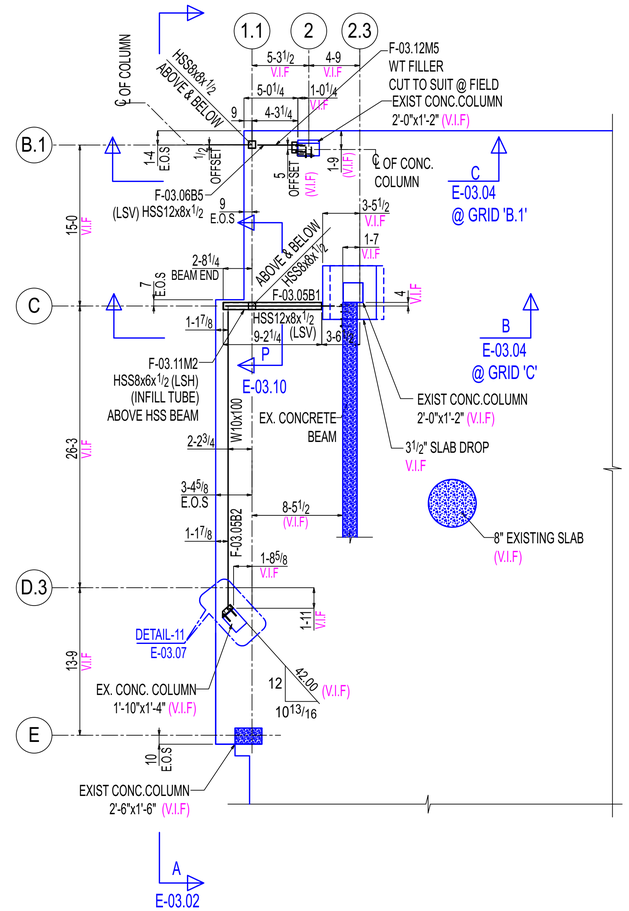

SOW-03 SOUTH WEST FRAMING LEVEL-01

(REF: S106 & 2/A053)

NOTE:
1.ALL DIMESNIONS NEEDS TO BE VERIFIED IN FIELD BEFORE FABRICATION OF MEMBER IN THIS AREA.
2.ALL NEW BEAMS ARE CENTERED ON THE EX. CONC COLUMN U.N.O.

PROJECT NORTH

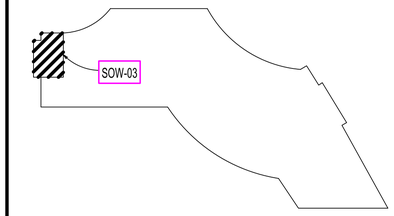

KEY PLAN

General Notes

*Structural steel shall conform to ASTM-A992.
*Structural SQR/RND.tubing conform to ASTM A500 Grade C
*Pipe shall conform to ASTM A53, Grade B.
*Channels, Angles and plates shall conform to A36.
*All bolts shall be 3/4" High strength in accordance with ASTM A325 (UNO)
*Welding Electrodes for Carbon steel :E70xx

# of Copies	Revision/ Issue	Destination	Date
1	0	For Construction	09-25-2025
3	C	For Re-Approval	08-22-2025
2	B	For Re-Approval	06-23-2025
1	A	For Approval	02-27-2025

IRON FABRICATION SERVICES, LLC.

3029 M. Street, NW, Suite 202
Washington, DC 20007
Tel: 202-800-5599
Fax: 202-478-0303

Project Name and Address
MARYLAND AVENUE

Location: **1250 MARYLAND AVENUE SW WASHINGTON, DC 20024**

Contractor:
BALFOUR BEATTY

Approved for Fabrication by:	Signature

Contract # **224009**
Drawing # **E-03.00**

Contract Item: **SOW #03 -SOUTH WEST FRAMING LEVEL P4 TO LEVEL 08**

Ref:
SOW -03: S101 TO S106

Date
01/ 20/ 2025

Scale
VARIES

Drawing Title:
SOW #03 -SOUTH WEST FRAMING PLAN LEVEL P4 TO COURTYARD LEVEL & LEVEL 01

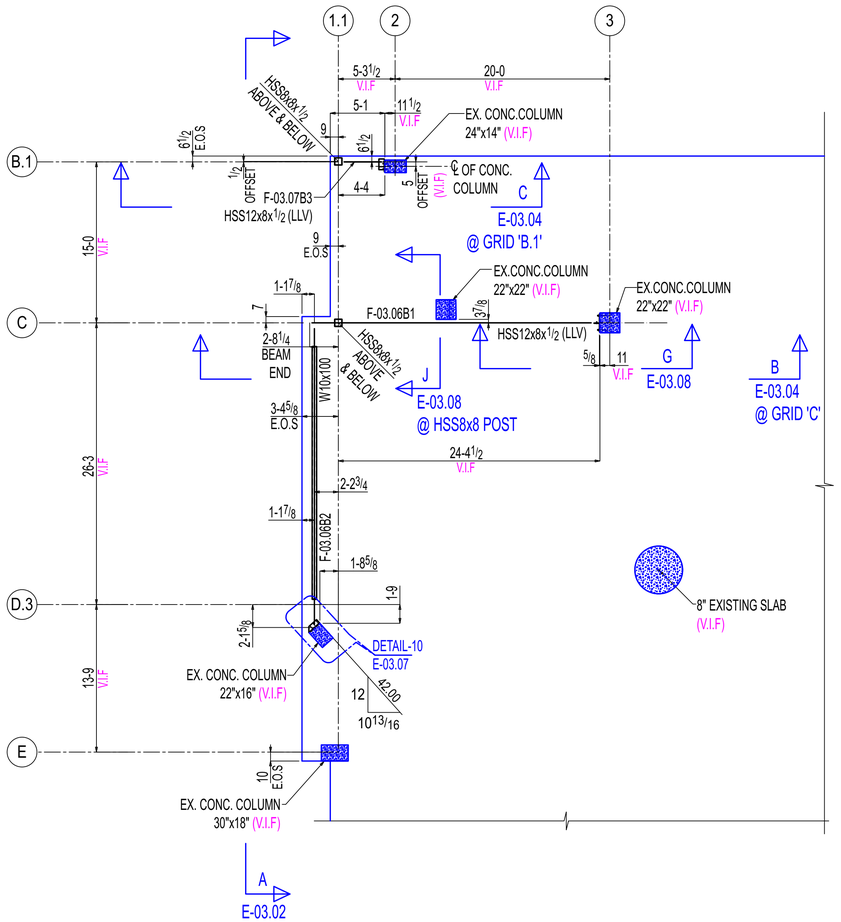

SOW-03 SOUTH WEST FRAMING LEVEL-02

(REF: S107,S108,S109,S110)

NOTE:
1.ALL DIMESNIONS NEEDS TO BE VERIFIED IN FIELD
BEFORE FABRICATION OF MEMBER IN THIS AREA.
2.ALL NEW BEAMS ARE CENTERED ON THE EX. CONC COLUMN U.N.O.

PROJECT NORTH

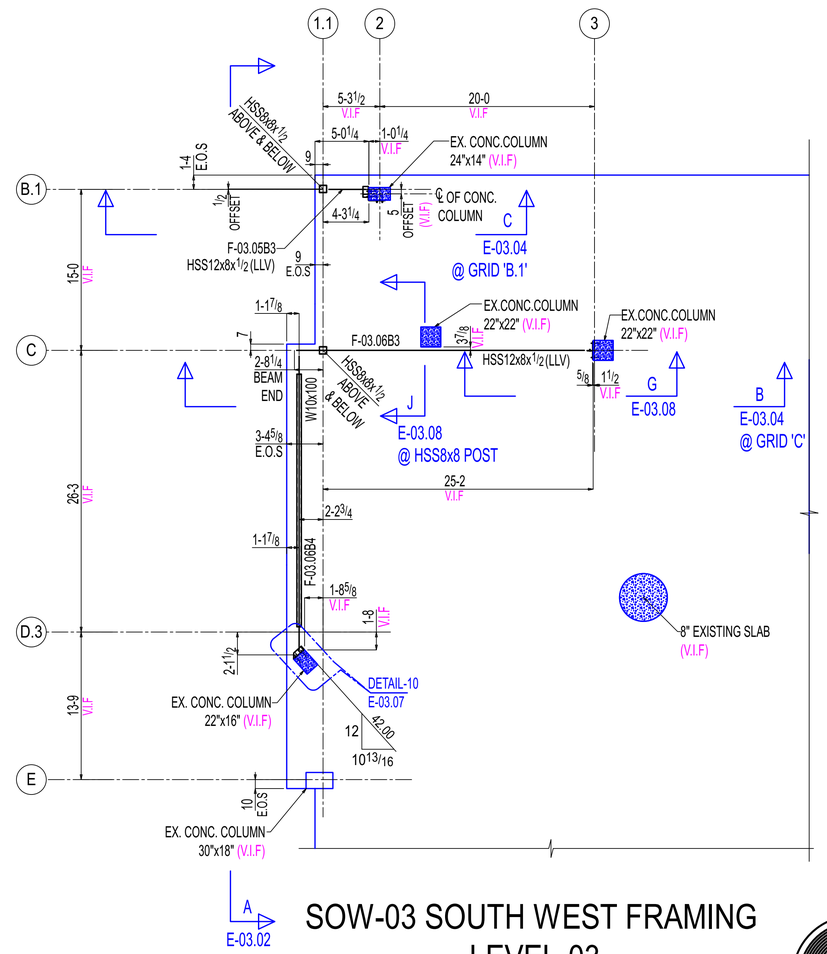

SOW-03 SOUTH WEST FRAMING LEVEL-03

(REF: S107,S108,S109,S110)

NOTE:
1.ALL DIMESNIONS NEEDS TO BE VERIFIED IN FIELD
BEFORE FABRICATION OF MEMBER IN THIS AREA.
2.ALL NEW BEAMS ARE CENTERED ON THE EX. CONC COLUMN U.N.O.

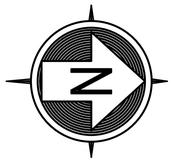

PROJECT NORTH

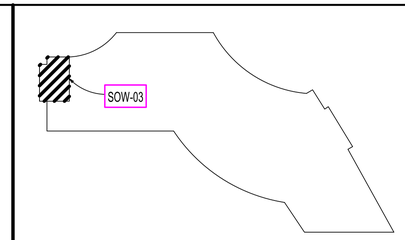

KEY PLAN

General Notes

*Structural steel shall conform to ASTM-A992.
*Structural SQR/RND.tubing conform to ASTM A500 Grade C
*Pipe shall conform to ASTM A53, Grade B.
*Channels, Angles and plates shall conform to A36.
*All bolts shall be 3/4" High strength in accordance with ASTM A325 (UNO)
*Welding Electrodes for Carbon steel :E70xx

# of Copies	Revision/ Issue	Destination	Date
1	0	For Construction	09-25-2025

IRON FABRICATION SERVICES, LLC.

3029 M. Street, NW, Suite 202
Washington, DC 20007
Tel: 202-800-5599
Fax: 202-478-0303

Project Name and Address
MARYLAND AVENUE

Location: **1250 MARYLAND AVENUE SW WASHINGTON, DC 20024**

Contractor:
BALFOUR BEATTY

Approved for Fabrication by:	Signature

Contract # **224009** Drawing # **E-03.00A**

Contract Item: **SOW #03 -SOUTH WEST FRAMING LEVEL P4 TO LEVEL 08**

Ref:
SOW -03: S101 TO S106

Date **01/ 20/ 2025**

Scale VARIES

Drawing Title:
SOW #03 -SOUTH WEST FRAMING PLAN LEVEL 02 & LEVEL 03

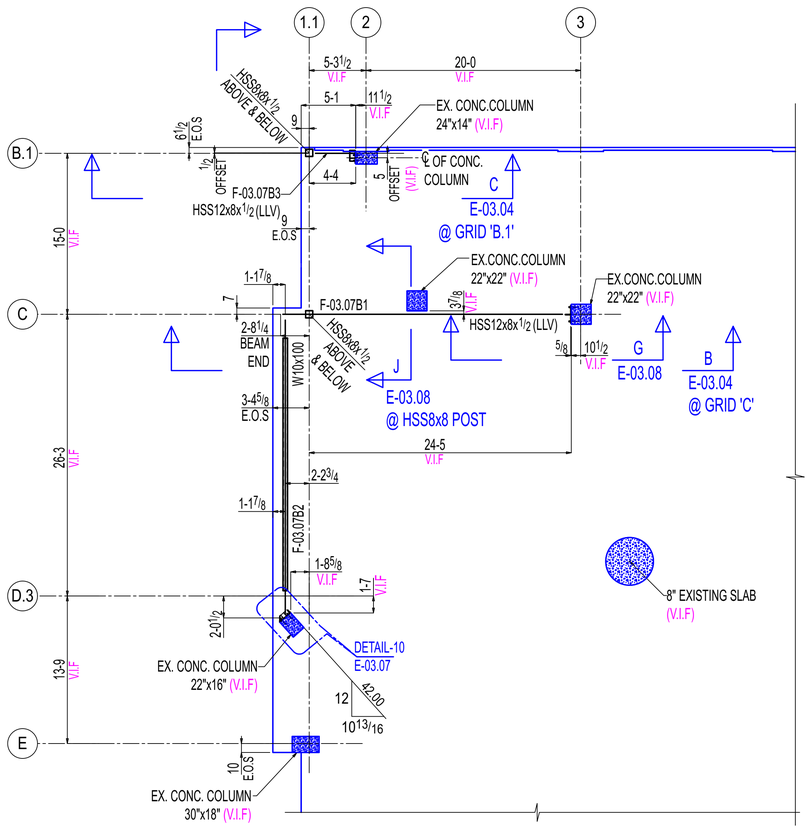

SOW-03 SOUTH WEST FRAMING LEVEL-04

(REF: S107,S108,S109,S110)

NOTE:
1.ALL DIMESNIONS NEEDS TO BE VERIFIED IN FIELD BEFORE FABRICATION OF MEMBER IN THIS AREA.
2.ALL NEW BEAMS ARE CENTERED ON THE EX. CONC COLUMN U.N.O.

PROJECT NORTH

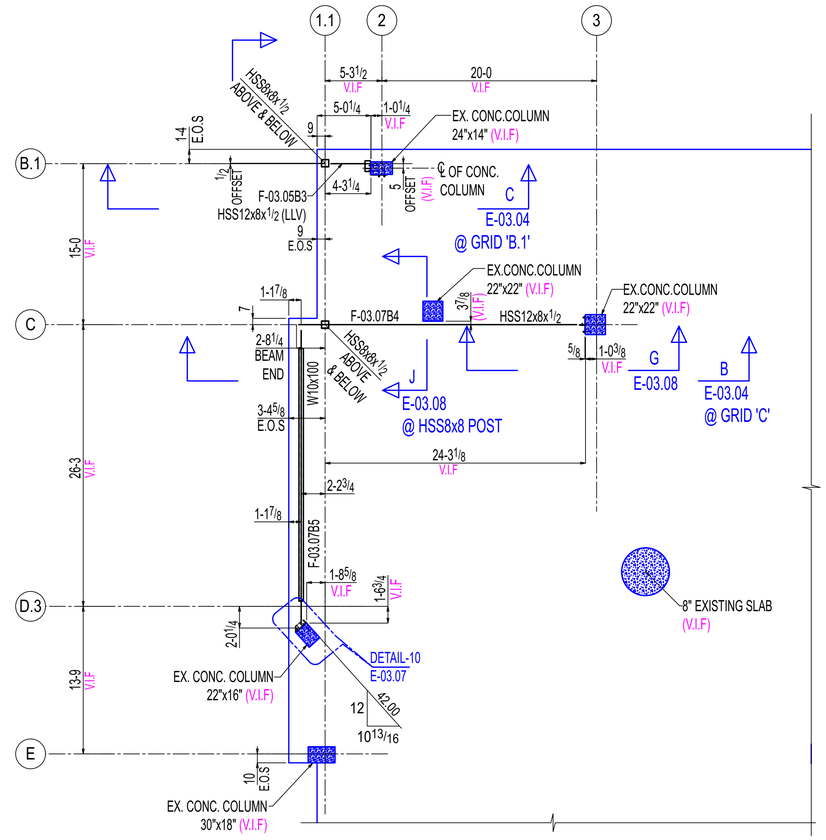

SOW-03 SOUTH WEST FRAMING LEVEL-05

(REF: S107,S108,S109,S110)

NOTE:
1.ALL DIMESNIONS NEEDS TO BE VERIFIED IN FIELD BEFORE FABRICATION OF MEMBER IN THIS AREA.
2.ALL NEW BEAMS ARE CENTERED ON THE EX. CONC COLUMN U.N.O.

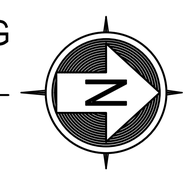

PROJECT NORTH

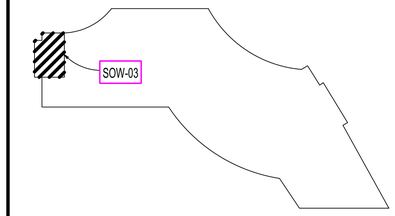

KEY PLAN

General Notes

*Structural steel shall conform to ASTM-A992.
*Structural SQR/RND.tubing conform to ASTM A500 Grade C
*Pipe shall conform to ASTM A53, Grade B.
*Channels, Angles and plates shall conform to A36.
*All bolts shall be ¾" High strength in accordance with ASTM A325 (UNO)
*Welding Electrodes for Carbon steel :E70xx

# of Copies	Revision/ Issue	Destination	Date
1	0	For Construction	09-25-2025
3	C	For Re-Approval	08-22-2025
2	B	For Re-Approval	06-23-2025
1	A	For Approval	02-27-2025

IRON FABRICATION SERVICES, LLC.

3029 M. Street, NW, Suite 202
Washington, DC 20007
Tel: 202-800-5599
Fax: 202-478-0303

Project Name and Address
MARYLAND AVENUE

Location: **1250 MARYLAND AVENUE SW WASHINGTON, DC 20024**

Contractor:
BALFOUR BEATTY

Approved for Fabrication by:	Signature

Contract # **224009**
Drawing # **E-03.01**

Contract Item: **SOW #03 -SOUTH WEST FRAMING LEVEL P4 TO LEVEL 08**

Ref:
SOW -03: S107 TO S112

Date
01/ 20/ 2025

Scale
VARIES

Drawing Title:
SOW #03 -SOUTH WEST FRAMING PLAN LEVEL 04 TO LEVEL 05

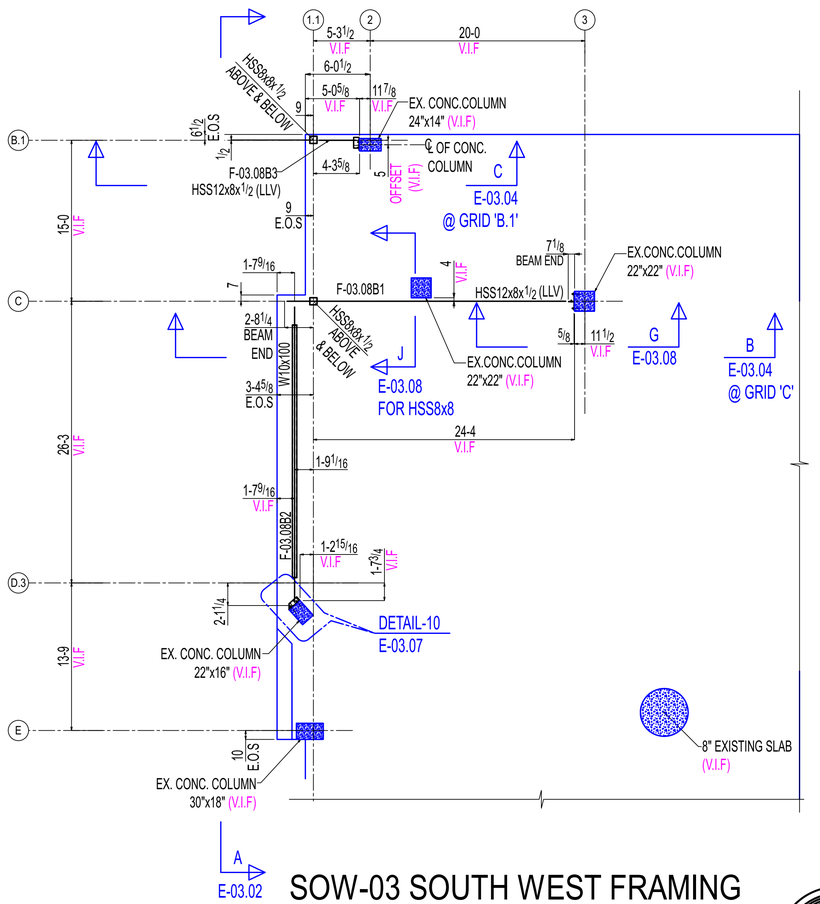

SOW-03 SOUTH WEST FRAMING LEVEL-06

(REF: S111)

NOTE:
1.ALL DIMESNIONS NEEDS TO BE VERIFIED IN FIELD BEFORE FABRICATION OF MEMBER IN THIS AREA.
2.ALL NEW BEAMS ARE CENTERED ON THE EX. CONC COLUMN U.N.O.

PROJECT NORTH

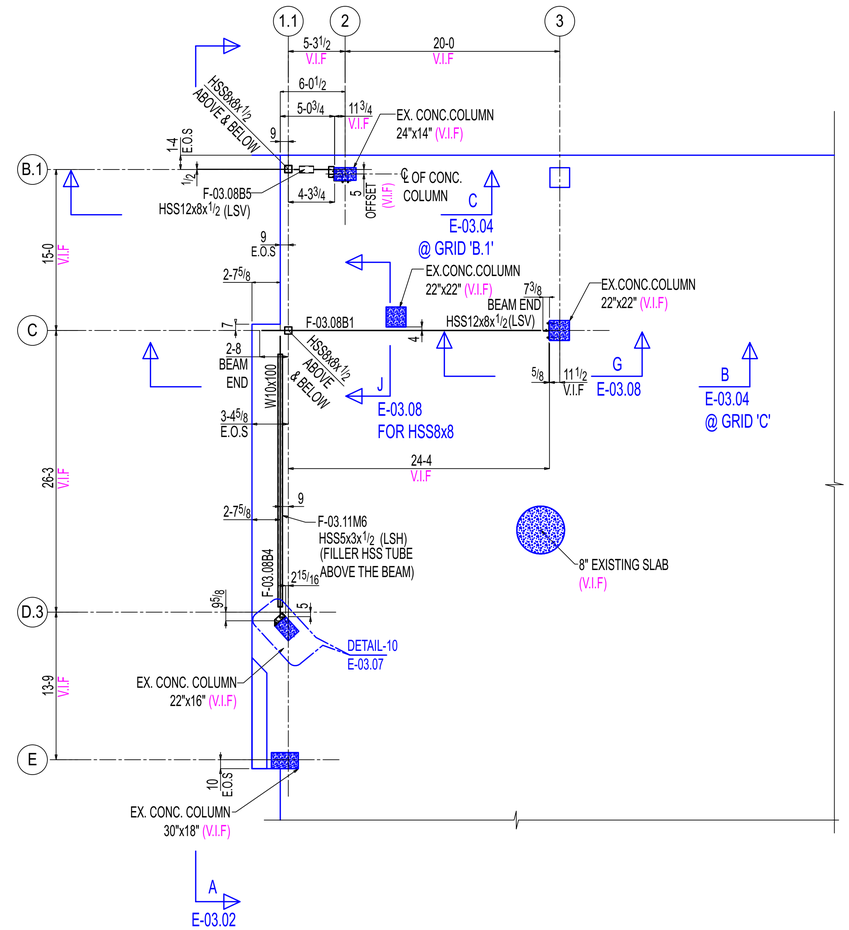

SOW-03 SOUTH WEST FRAMING LEVEL-07

(REF: S112)

NOTE:
1.ALL DIMESNIONS NEEDS TO BE VERIFIED IN FIELD BEFORE FABRICATION OF MEMBER IN THIS AREA.
2.ALL NEW BEAMS ARE CENTERED ON THE EX. CONC COLUMN U.N.O.

PROJECT NORTH

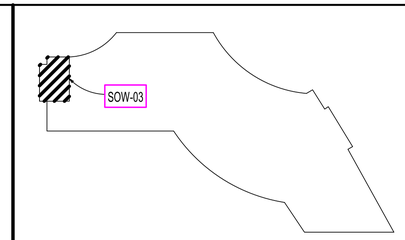

KEY PLAN

General Notes

*Structural steel shall conform to ASTM-A992.
*Structural SQR/RND.tubing conform to ASTM A500 Grade C
*Pipe shall conform to ASTM A53, Grade B.
*Channels, Angles and plates shall conform to A36.
*All bolts shall be 3/4" High strength in accordance with ASTM A325 (UNO)
*Welding Electrodes for Carbon steel :E70xx

# of Copies	Revision/ Issue	Destination	Date
1	0	For Construction	09-25-2025
2	B	For Re-Approval	08-22-2025
1	A	For Approval	06-23-2025

IRON FABRICATION SERVICES, LLC.

3029 M. Street, NW, Suite 202
Washington, DC 20007
Tel: 202-800-5599
Fax: 202-478-0303

Project Name and Address
MARYLAND AVENUE

Location: **1250 MARYLAND AVENUE SW WASHINGTON, DC 20024**

Contractor:
BALFOUR BEATTY

Approved for Fabrication by:	Signature

Contract # **224009** Drawing # **E-03.01A**

Contract Item: **SOW #03 -SOUTH WEST FRAMING LEVEL P4 TO LEVEL 08**

Ref:
SOW -03: S107 & S108

Date
01/ 20/ 2025

Drawing Title:
SOW #03 -SOUTH WEST FRAMING PLAN LEVEL 06 & LEVEL 07

Scale
VARIES

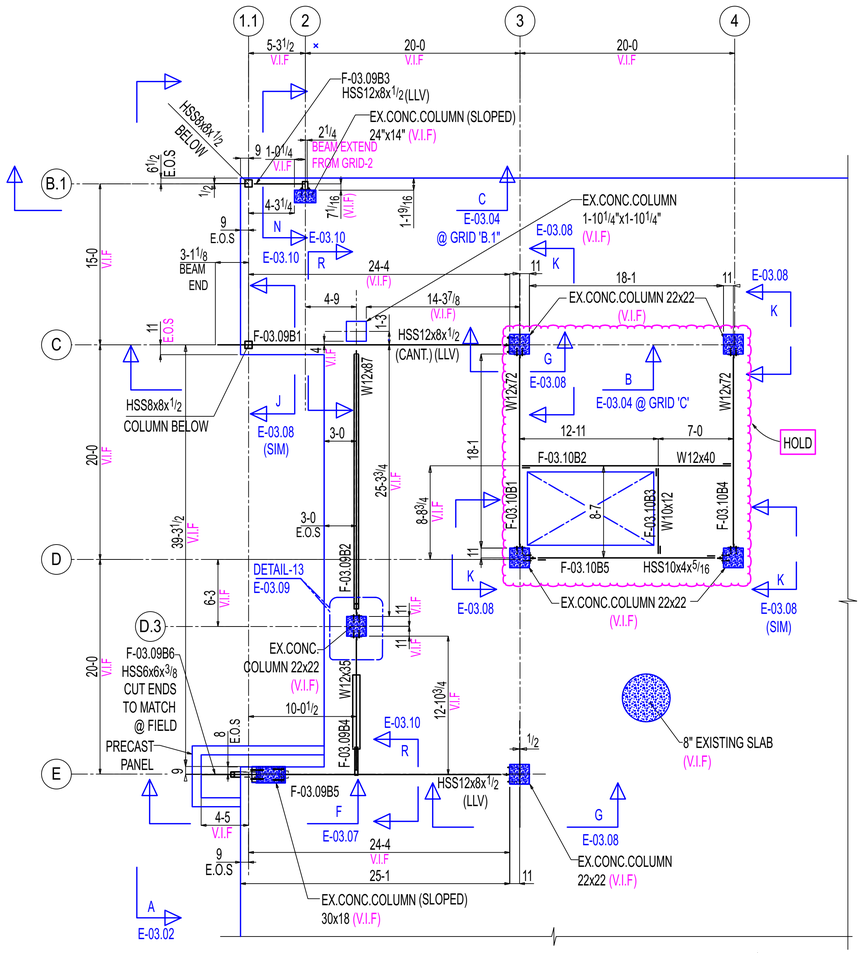

SOW-03 SOUTH WEST FRAMING LEVEL-08

(REF: S113_A)

NOTE:
1.ALL DIMESNIONS NEEDS TO BE VERIFIED IN FIELD BEFORE FABRICATION OF MEMBER IN THIS AREA.
2.ALL NEW BEAMS ARE CENTERED ON THE EX. CONC COLUMN U.N.O.

PROJECT NORTH

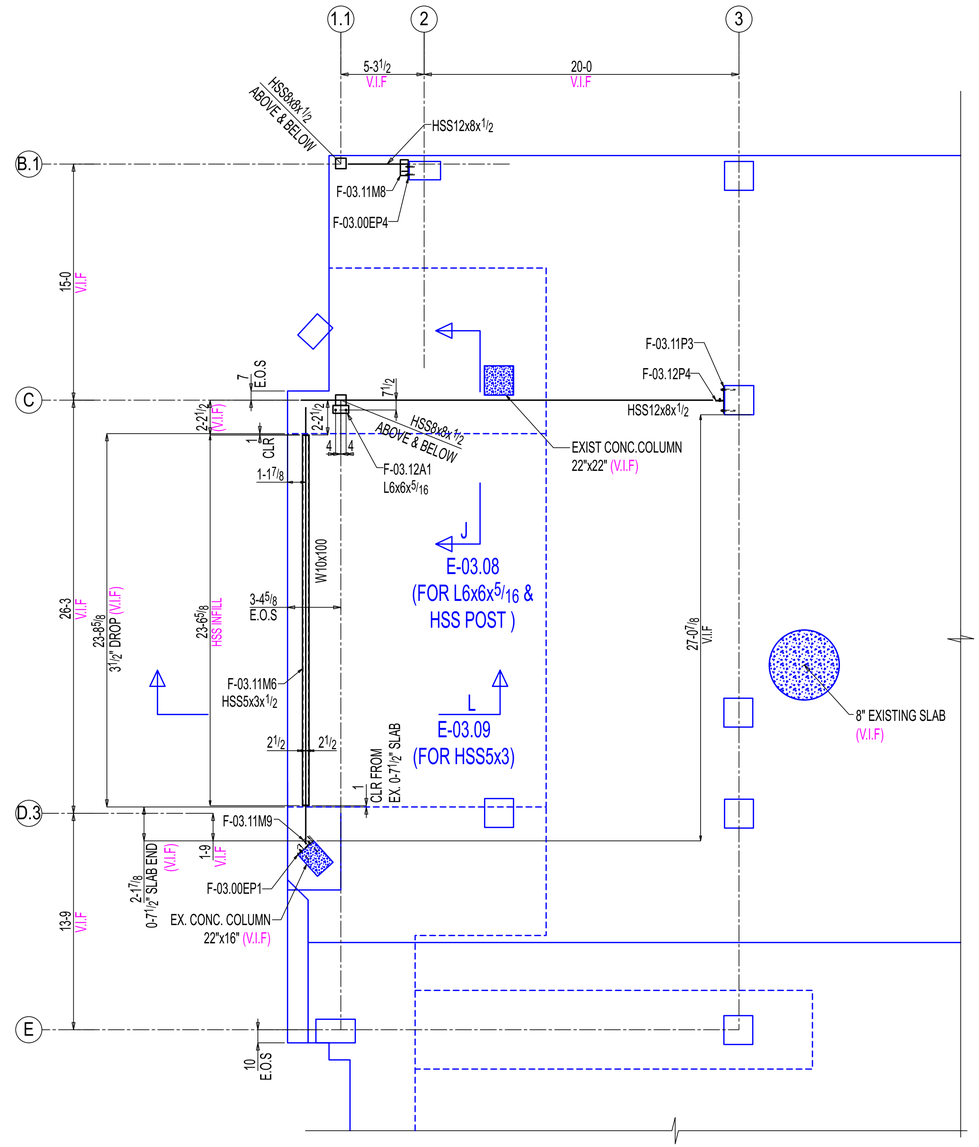

SOW-03 SOUTH WEST MISC PLAN LEVEL-02

(REF: S107)

NOTE:
1.ALL DIMESNIONS NEEDS TO BE VERIFIED IN FIELD BEFORE FABRICATION OF MEMBER IN THIS AREA.
2.ALL NEW BEAMS ARE CENTERED ON THE EX. CONC COLUMN U.N.O.
3.REFER SHEETS E-03.05 THRU E-03.10 FOR ALL MISC ITEM LOCATION.

PROJECT NORTH

KEY PLAN

General Notes

*Structural steel shall conform to ASTM-A992.
*Structural SQR/RND.tubing conform to ASTM A500 Grade C
*Pipe shall conform to ASTM A53, Grade B.
*Channels, Angles and plates shall conform to A36.
*All bolts shall be 3/4" High strength in accordance with ASTM A325 (UNO)
*Welding Electrodes for Carbon steel :E70xx

# of Copies	Revision/ Issue	Destination	Date
1	0	For Construction	09-25-2025
2	B	For Re-Approval	08-22-2025
1	A	For Approval	06-23-2025

IRON FABRICATION SERVICES, LLC.

3029 M. Street, NW, Suite 202
Washington, DC 20007
Tel: 202-800-5599
Fax: 202-478-0303

Project Name and Address
MARYLAND AVENUE

Location: **1250 MARYLAND AVENUE SW WASHINGTON, DC 20024**

Contractor:
BALFOUR BEATTY

Approved for Fabrication by:	Signature

Contract # **224009** | Drawing # **E-03.01B**

Contract Item: **SOW #03 -SOUTH WEST FRAMING & MISC PLAN**

Ref:
SOW -03: S109 TO S110

Date **01/ 20/ 2025**

Scale VARIES

Drawing Title: **SOW #03 -SOUTH WEST FRAMING PLAN LEVEL 08 & MISC PLAN LEVEL 02**

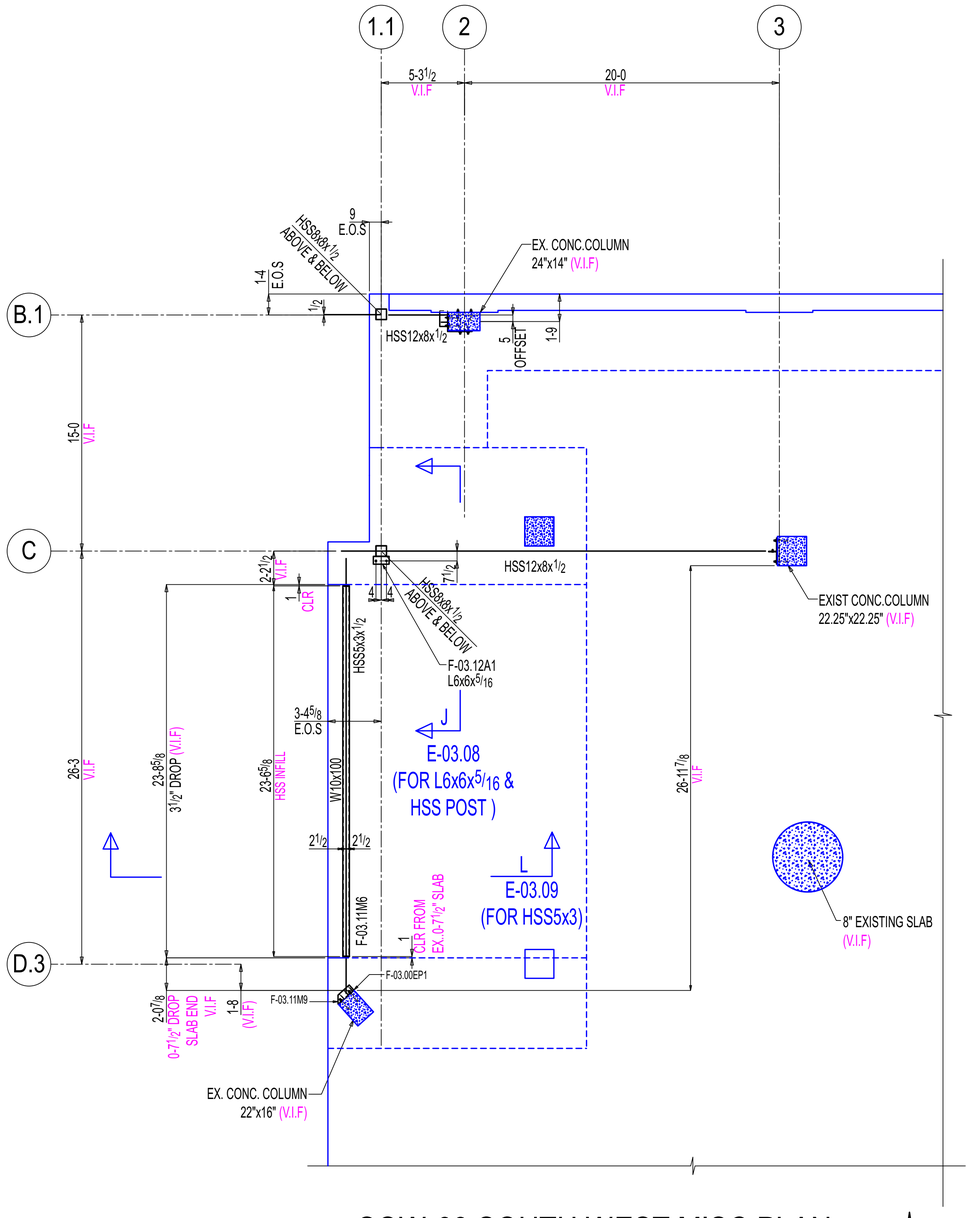

SOW-03 SOUTH WEST MISC PLAN LEVEL-03

(REF: S108)

NOTE:

1.ALL DIMESNIONS NEEDS TO BE VERIFIED IN FIELD BEFORE FABRICATION OF MEMBER IN THIS AREA.
2.ALL NEW BEAMS ARE CENTERED ON THE EX. CONC COLUMN U.N.O.
3.REFER SHEETS E-03.05 THRU E-03.10 FOR ALL MISC ITEM LOCATION.

PROJECT NORTH

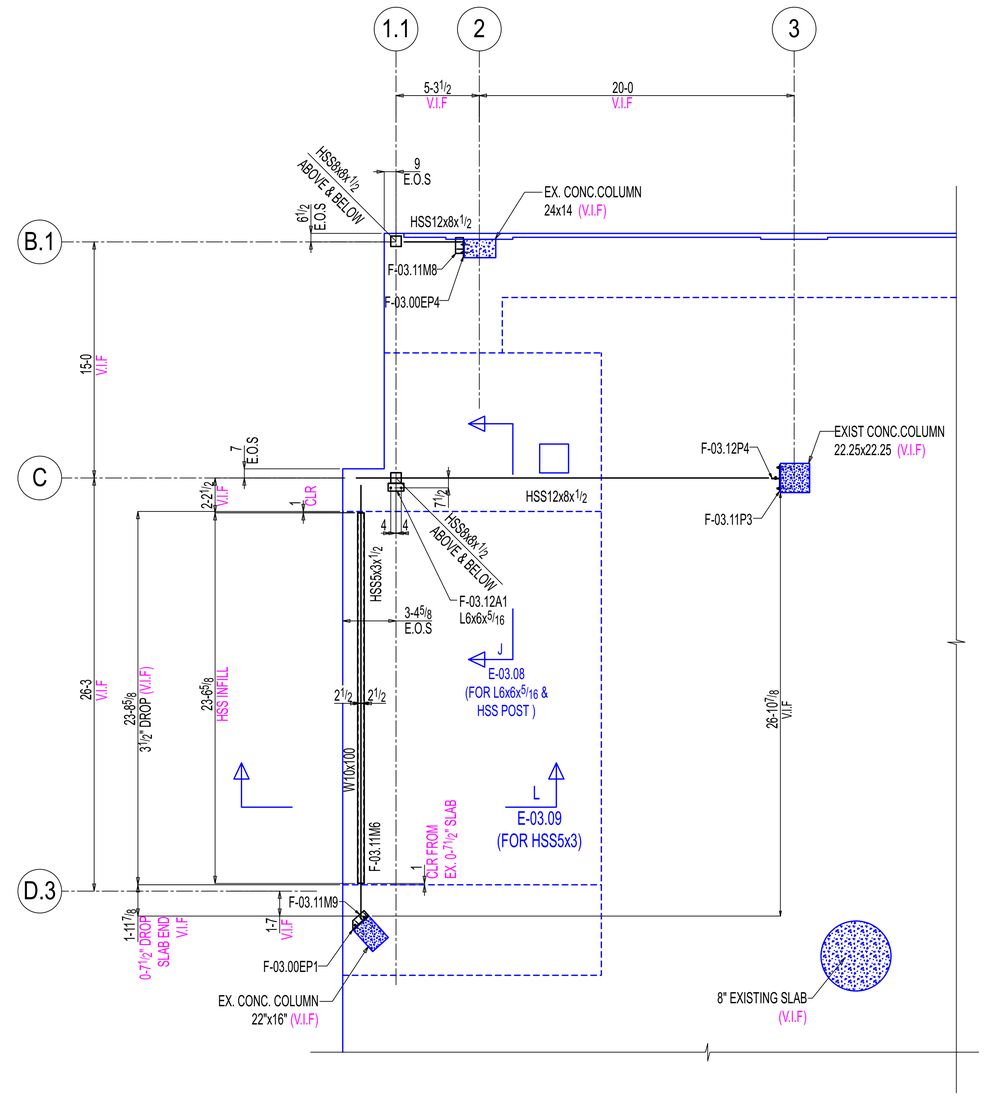

SOW-03 SOUTH WEST MISC PLAN LEVEL-04

(REF: S109)

NOTE:

1.ALL DIMESNIONS NEEDS TO BE VERIFIED IN FIELD BEFORE FABRICATION OF MEMBER IN THIS AREA.
2.ALL NEW BEAMS ARE CENTERED ON THE EX. CONC COLUMN U.N.O.
3.REFER SHEETS E-03.05 THRU E-03.10 FOR ALL MISC ITEM LOCATION.

PROJECT NORTH

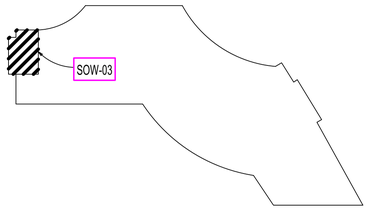

KEY PLAN

General Notes

*Structural steel shall conform to ASTM-A992.
*Structural SQR/RND.tubing conform to ASTM A500 Grade C
*Pipe shall conform to ASTM A53, Grade B.
*Channels, Angles and plates shall conform to A36.
*All bolts shall be 3/4" High strength in accordance with ASTM A325 (UNO)
*Welding Electrodes for Carbon steel :E70xx

# of Copies	Revision/ Issue	Destination	Date
1	0	For Construction	09-25-2025
2	B	For Re-Approval	08-22-2025
1	A	For Approval	06-23-2025

IRON FABRICATION SERVICES, LLC.

3029 M. Street, NW, Suite 202
Washington, DC 20007
Tel: 202-800-5599
Fax: 202-478-0303

Project Name and Address
MARYLAND AVENUE

Location: **1250 MARYLAND AVENUE SW WASHINGTON, DC 20024**

Contractor:
BALFOUR BEATTY

Approved for Fabrication by:	Signature

Contract # **224009** Drawing # **E-03.01C**

Contract Item: **SOW #03 -SOUTH WEST MISC PLAN**

Ref:
SOW -03: S111 TO S112

Date **01/ 20/ 2025**

Scale VARIES

Drawing Title:
SOW #03 -SOUTH WEST MISC PLAN LEVEL 03 & LEVEL 04

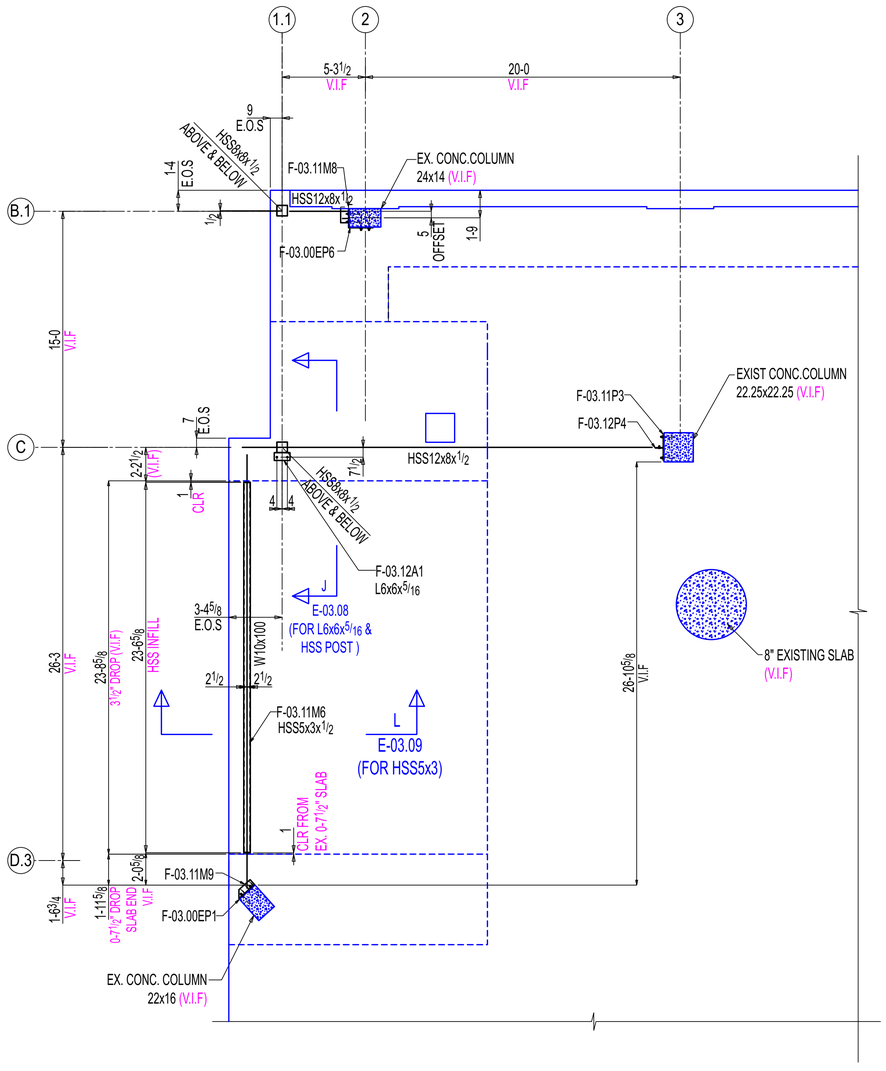

SOW-03 SOUTH WEST MISC PLAN LEVEL-05

(REF: S110)

NOTE:

1.ALL DIMESNIONS NEEDS TO BE VERIFIED IN FIELD BEFORE FABRICATION OF MEMBER IN THIS AREA.
2.ALL NEW BEAMS ARE CENTERED ON THE EX. CONC COLUMN U.N.O.
3.REFER SHEETS E-03.05 THRU E-03.10 FOR ALL MISC ITEM LOCATION.

PROJECT NORTH

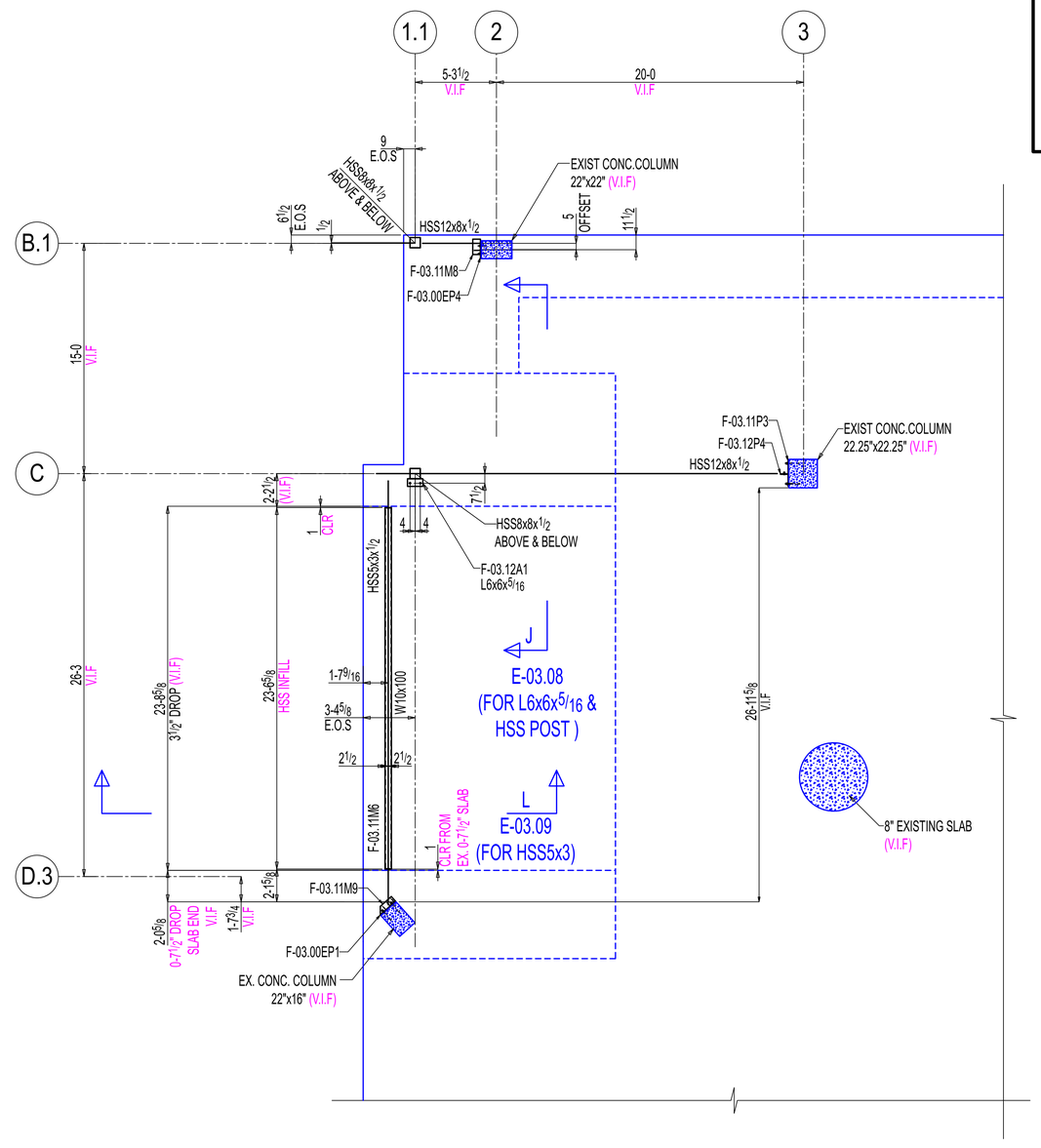

SOW-03 SOUTH WEST MISC PLAN LEVEL-06

(REF: S111)

NOTE:

1.ALL DIMESNIONS NEEDS TO BE VERIFIED IN FIELD BEFORE FABRICATION OF MEMBER IN THIS AREA.
2.ALL NEW BEAMS ARE CENTERED ON THE EX. CONC COLUMN U.N.O.
3.REFER SHEETS E-03.05 THRU E-03.10 FOR ALL MISC ITEM LOCATION.

PROJECT NORTH

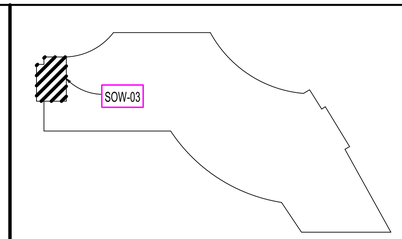

KEY PLAN

General Notes

*Structural steel shall conform to ASTM-A992.
*Structural SQR/RND.tubing conform to ASTM A500 Grade C
*Pipe shall conform to ASTM A53, Grade B.
*Channels, Angles and plates shall conform to A36.
*All bolts shall be 3/4" High strength in accordance with ASTM A325 (UNO)
*Welding Electrodes for Carbon steel :E70xx

# of Copies	Revision/ Issue	Destination	Date
1	0	For Construction	09-25-2025
2	B	For Re-Approval	08-22-2025
1	A	For Approval	06-23-2025

IRON FABRICATION SERVICES, LLC.

3029 M. Street, NW, Suite 202
Washington, DC 20007
Tel: 202-800-5599
Fax: 202-478-0303

Project Name and Address
MARYLAND AVENUE

Location: **1250 MARYLAND AVENUE SW WASHINGTON, DC 20024**

Contractor:
BALFOUR BEATTY

Approved for Fabrication by:	Signature

Contract # **224009** Drawing # **E-03.01D**

Contract Item: **SOW #03 -SOUTH WEST MISC PLAN**

Ref:
SOW -03: S113 & S133_A

Date **01/ 20/ 2025**

Scale VARIES

Drawing Title:
SOW #03 -SOUTH WEST MISC PLAN LEVEL 05 & LEVEL 06

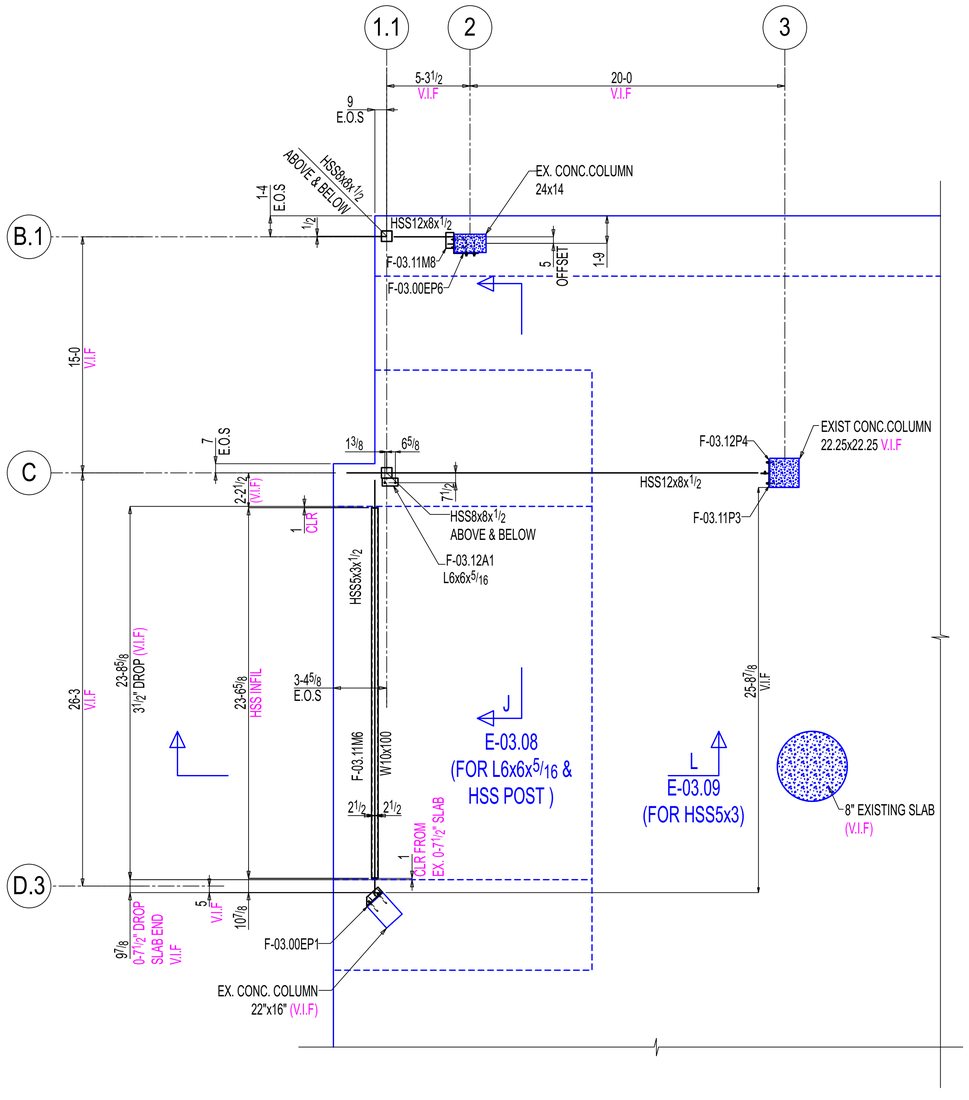

SOW-03 SOUTH WEST MISC PLAN LEVEL-07

(REF: S112)

NOTE:

1.ALL DIMESNIONS NEEDS TO BE VERIFIED IN FIELD BEFORE FABRICATION OF MEMBER IN THIS AREA.

2.ALL NEW BEAMS ARE CENTERED ON THE EX. CONC COLUMN U.N.O.

3.REFER SHEETS E-03.05 THRU E-03.10 FOR ALL MISC ITEM LOCATION.

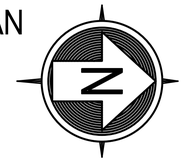

PROJECT NORTH

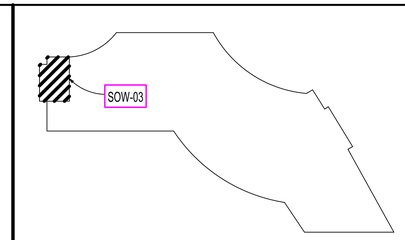

KEY PLAN

General Notes

*Structural steel shall conform to ASTM-A992.
*Structural SQR/RND.tubing conform to ASTM A500 Grade C
*Pipe shall conform to ASTM A53, Grade B.
*Channels, Angles and plates shall conform to A36.
*All bolts shall be 3/4" High strength in accordance with ASTM A325 (UNO)
*Welding Electrodes for Carbon steel :E70xx

# of Copies	Revision/ Issue	Destination	Date
1	0	For Construction	09-25-2025
1	A	For Approval	08-22-2025

IRON FABRICATION SERVICES, LLC.

3029 M. Street, NW, Suite 202
Washington, DC 20007
Tel: 202-800-5599
Fax: 202-478-0303

Project Name and Address
MARYLAND AVENUE

Location: **1250 MARYLAND AVENUE SW WASHINGTON, DC 20024**

Contractor:
BALFOUR BEATTY

Approved for Fabrication by:	Signature

Contract # **224009**
Drawing # **E-03.01E**

Contract Item: **SOW #03 -SOUTH WEST MISC PLAN**

Ref:
SOW -03: S113 & S133_A

Date
01/ 20/ 2025

Scale
VARIES

Drawing Title:
SOW #03 -SOUTH WEST MISC PLAN LEVEL 07

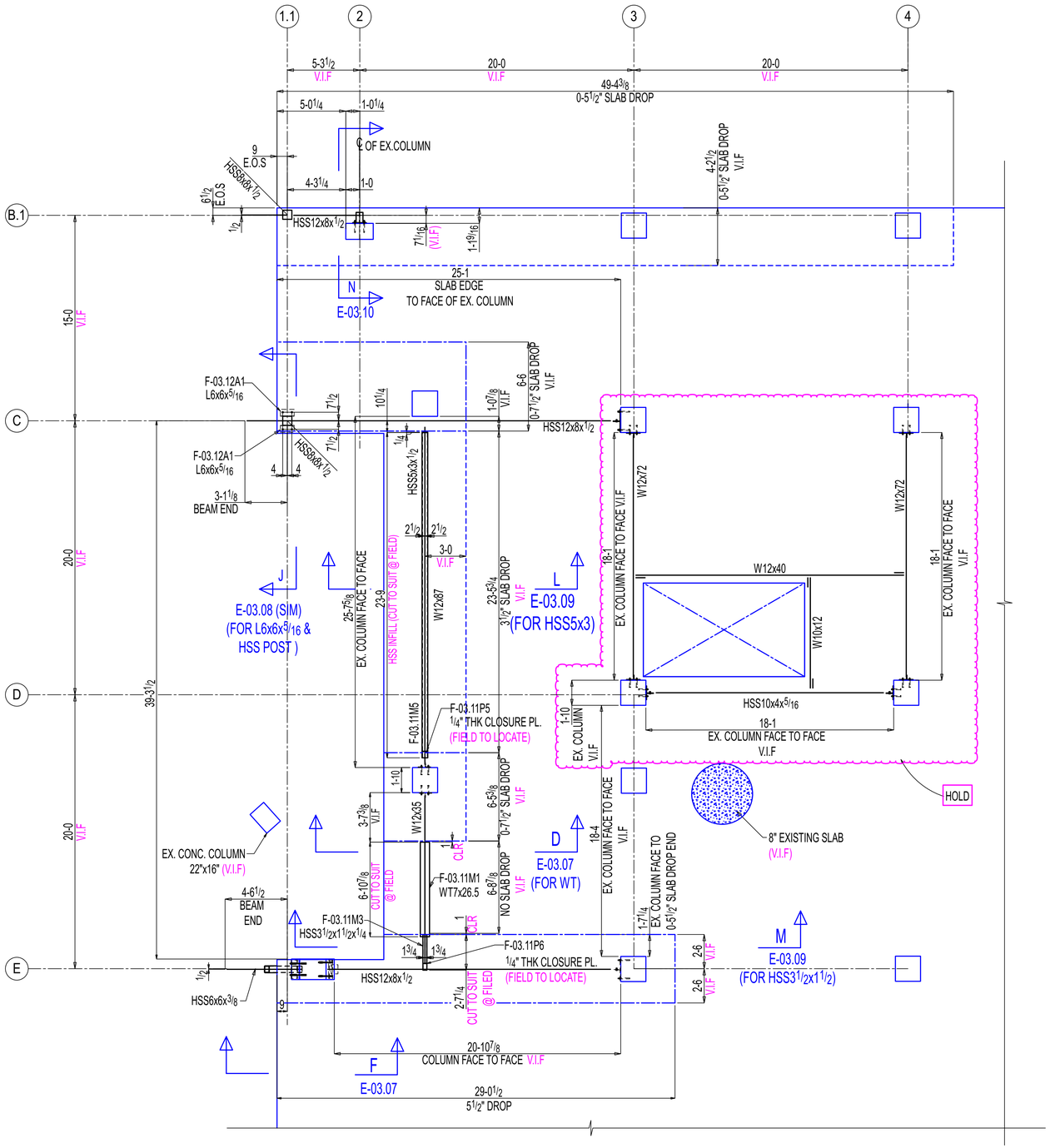

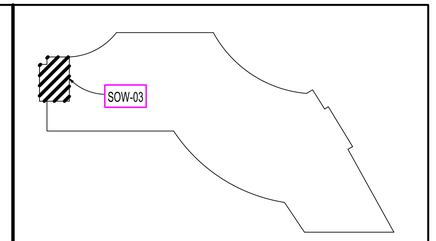

KEY PLAN

SOW-03 SOUTH WEST MISC PLAN LEVEL-08

(REF: S113_A)

NOTE:

1.ALL DIMESNIONS NEEDS TO BE VERIFIED IN FIELD BEFORE FABRICATION OF MEMBER IN THIS AREA.

2.ALL NEW BEAMS ARE CENTERED ON THE EX. CONC COLUMN U.N.O.

3.REFER SHEETS E-03.05 THRU E-03.10 FOR ALL MISC ITEM LOCATION.

PROJECT NORTH

General Notes

*Structural steel shall conform to ASTM-A992.
*Structural SQR/RND.tubing conform to ASTM A500 Grade C
*Pipe shall conform to ASTM A53, Grade B.
*Channels, Angles and plates shall conform to A36.
*All bolts shall be 3/4" High strength in accordance with ASTM A325 (UNO)
*Welding Electrodes for Carbon steel :E70xx

# of Copies	Revision/ Issue	Destination	Date
1	0	For Construction	09-25-2025

IRON FABRICATION SERVICES, LLC.

3029 M. Street, NW, Suite 202
Washington, DC 20007
Tel: 202-800-5599
Fax: 202-478-0303

Project Name and Address
MARYLAND AVENUE

Location: **1250 MARYLAND AVENUE SW WASHINGTON, DC 20024**

Contractor:
BALFOUR BEATTY

Approved for Fabrication by:	Signature

Contract # **224009**
Drawing # **E-03.01F**

Contract Item: **SOW #03 -SOUTH WEST MISC PLAN**

Ref:
SOW -03: S113 & S133_A

Date **01/ 20/ 2025**

Scale VARIES

Drawing Title:
SOW #03 -SOUTH WEST MISC PLAN LEVEL 08

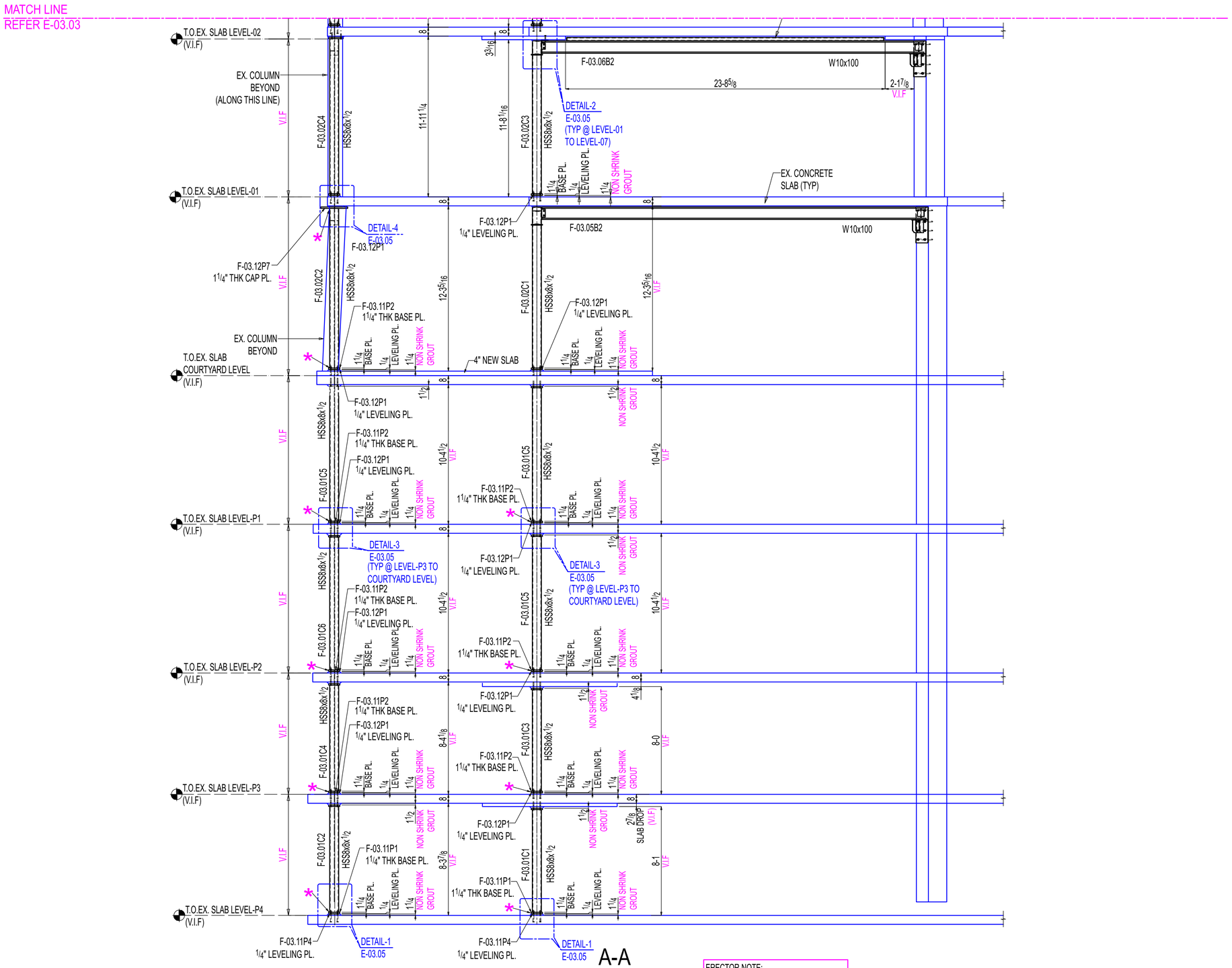

ERECTOR NOTE:
ALL * INDICATED COLUMN ENDS TO BE CUT TO SUIT @ FIELD BASED ON FLOOR TO FLOOR CLEARENCE AND WELD IT TO THE BASE / CAP PLATE.

General Notes

*Structural steel shall conform to ASTM-A992.
*Structural SQR/RND.tubing conform to ASTM A500 Grade C
*Pipe shall conform to ASTM A53, Grade B.
*Channels, Angles and plates shall conform to A36.
*All bolts shall be 3/4" High strength in accordance with ASTM A325 (UNO)
*Welding Electrodes for Carbon steel :E70xx

# of Copies	Revision/ Issue	Destination	Date
1	0	For Construction	09-25-2025
3	C	For Re-Approval	08-22-2025
2	B	For Re-Approval	06-23-2025
1	A	For Approval	02-27-2025

IRON FABRICATION SERVICES, LLC.

3029 M. Street, NW, Suite 202
Washington, DC 20007
Tel: 202-800-5599
Fax: 202-478-0303

Project Name and Address
MARYLAND AVENUE

Location: **1250 MARYLAND AVENUE SW WASHINGTON, DC 20024**

Contractor:
BALFOUR BEATTY

Approved for Fabrication by:	Signature

Contract # **224009**
Drawing # **E-03.02**

Contract Item: **SOW #03 -SOUTH WEST FRAMING LEVEL P4 TO LEVEL 08**

Ref:
SOW -03: S133_A,S308

Date **01/ 20/ 2025**
Scale VARIES

Drawing Title:
SOW #03 -SOUTH WEST FRAMING ELEVATION VIEWS

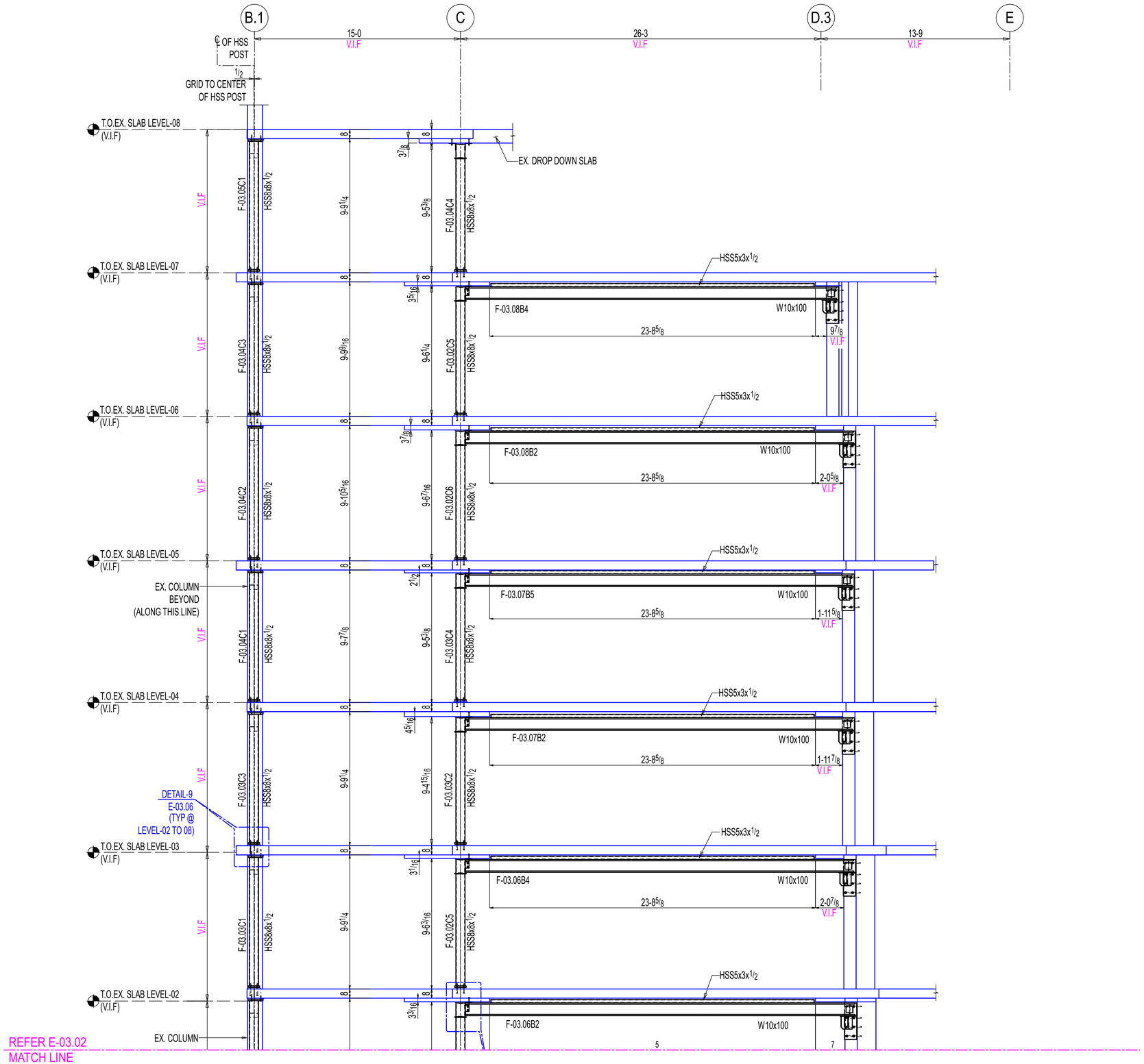

General Notes

*Structural steel shall conform to ASTM-A992.
*Structural SQR/RND.tubing conform to ASTM A500 Grade C
*Pipe shall conform to ASTM A53, Grade B.
*Channels, Angles and plates shall conform to A36.
*All bolts shall be 3/4" High strength in accordance with ASTM A325 (UNO)
*Welding Electrodes for Carbon steel :E70xx

# of Copies	Revision/ Issue	Destination	Date
1	0	For Construction	09-25-2025
3	C	For Re-Approval	08-22-2025
2	B	For Re-Approval	06-23-2025
1	A	For Approval	02-27-2025

IRON FABRICATION SERVICES, LLC.

3029 M. Street, NW, Suite 202
Washington, DC 20007
Tel: 202-800-5599
Fax: 202-478-0303

Project Name and Address
MARYLAND AVENUE

Location: **1250 MARYLAND AVENUE SW WASHINGTON, DC 20024**

Contractor:
BALFOUR BEATTY

Approved for Fabrication by:	Signature

Contract # **224009**
Drawing # **E-03.03**

Contract Item: **SOW #03 -SOUTH WEST FRAMING LEVEL P4 TO LEVEL 08**

Ref:
SOW -03: S133_A,S308

Date
01/ 20/ 2025

Scale
VARIES

Drawing Title:
SOW #03 -SOUTH WEST FRAMING ELEVATION VIEWS

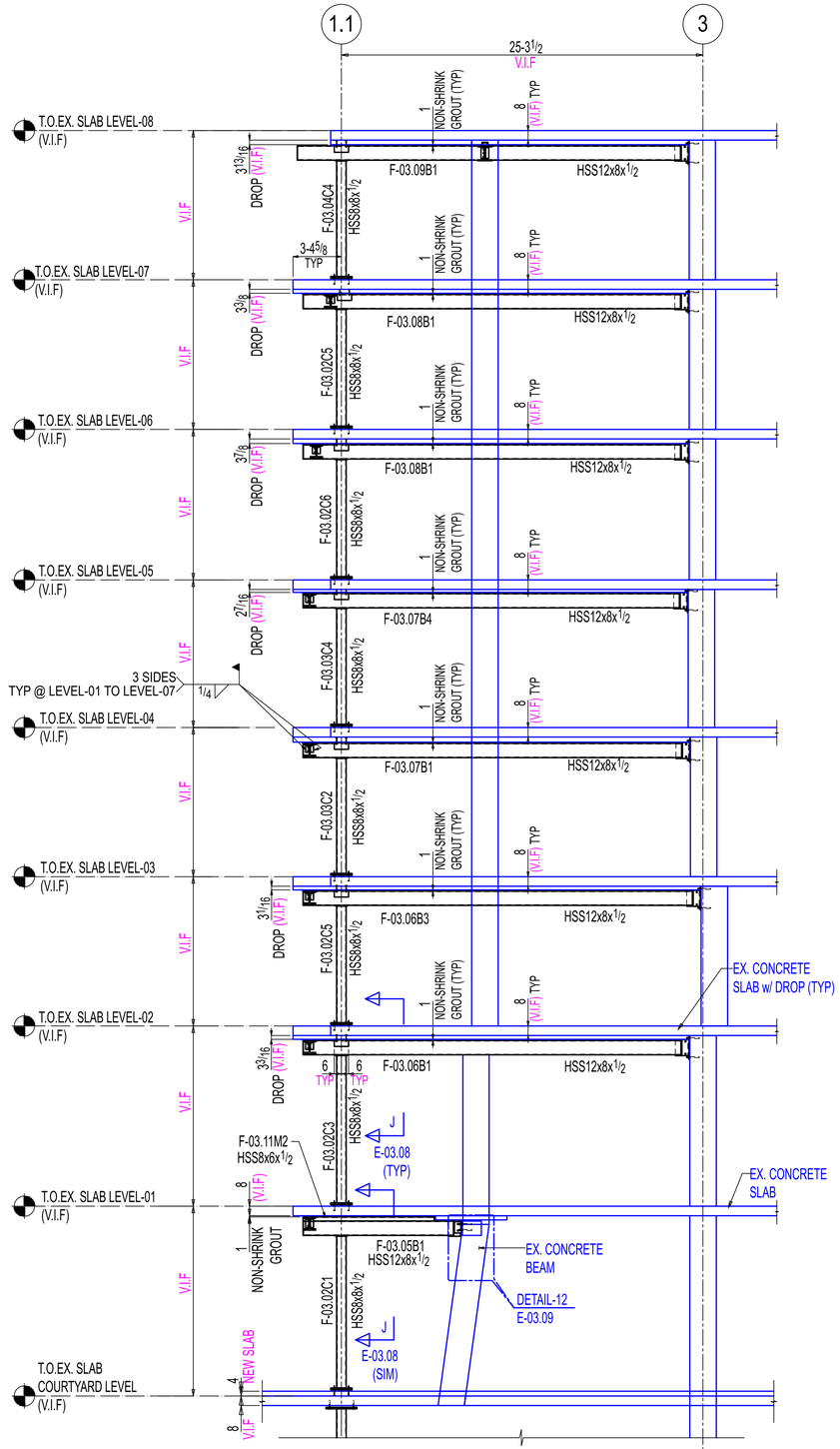

B-B

E-03.00,E-03.00A,E-03.01,
E-03.01A,E-03.01B

OTHERS NOT SHOWN FOR CLARITY

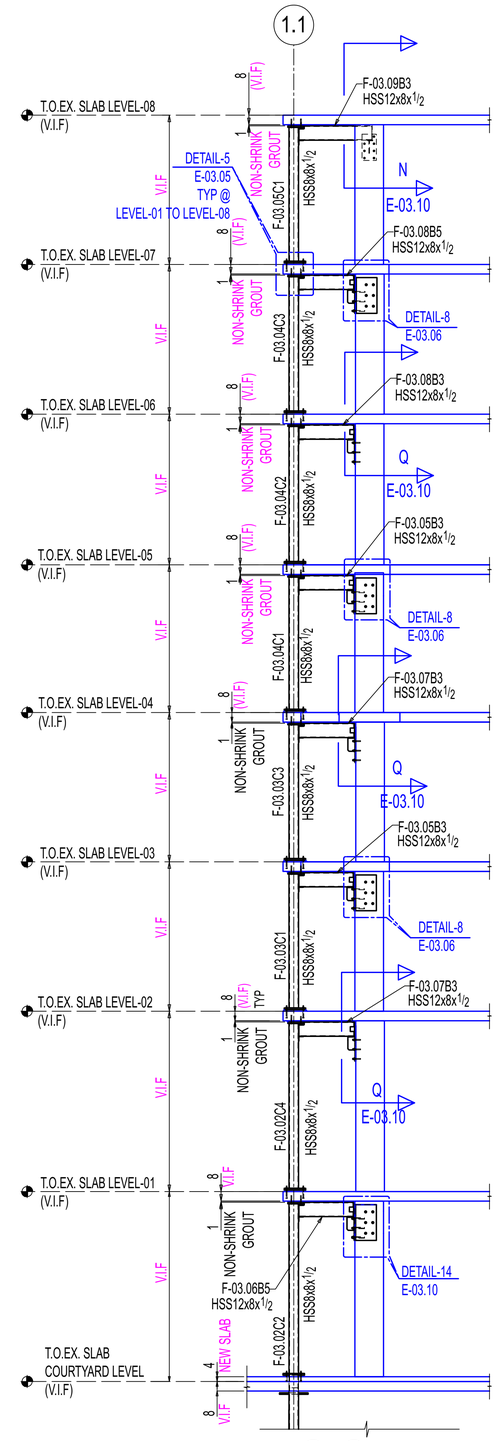

C-C

E-03.00,E-03.00A,E-03.01,
E-03.01A,E-03.01B

OTHERS NOT SHOWN FOR CLARITY

General Notes

*Structural steel shall conform to ASTM-A992.
*Structural SQR/RND.tubing conform to ASTM A500 Grade C
*Pipe shall conform to ASTM A53, Grade B.
*Channels, Angles and plates shall conform to A36.
*All bolts shall be ¾" High strength in accordance with ASTM A325 (UNO)
*Welding Electrodes for Carbon steel :E70xx

# of Copies	Revision/ Issue	Destination	Date
1	0	For Construction	09-25-2025
3	C	For Re-Approval	08-22-2025
2	B	For Re-Approval	06-23-2025
1	A	For Approval	02-27-2025

IRON FABRICATION SERVICES, LLC.

3029 M. Street, NW, Suite 202
Washington, DC 20007
Tel: 202-800-5599
Fax: 202-478-0303

Project Name and Address
MARYLAND AVENUE

Location: **1250 MARYLAND AVENUE SW WASHINGTON, DC 20024**

Contractor:
BALFOUR BEATTY

Approved for Fabrication by:	Signature

Contract # **224009**

Drawing # **E-03.04**

Contract Item: **SOW #03 -SOUTH WEST FRAMING LEVEL P4 TO LEVEL 08**

Ref:
SOW -03: S133_A,S308

Date
01/ 20/ 2025

Scale
VARIES

Drawing Title:
SOW #03 -SOUTH WEST FRAMING ELEVATION VIEWS

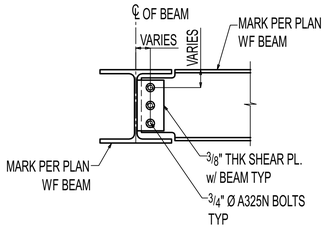

TYPICAL WF BEAM TO WF BEAM

WF BEAM TO WF BEAM CONN.		
BEAM SIZE	NO.OF BOLTS	SHEAR PL. THICK.
W12	3	3/8"
W10	2	3/8"

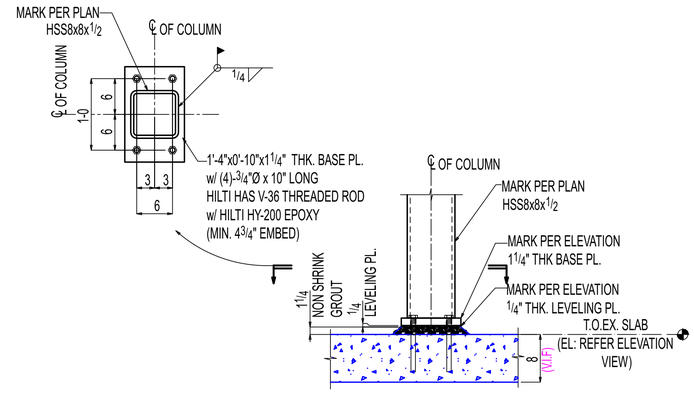

DETAIL-1

E-03.02
(REF:04/S301)

OTHERS NOT SHOWN FOR CLARITY

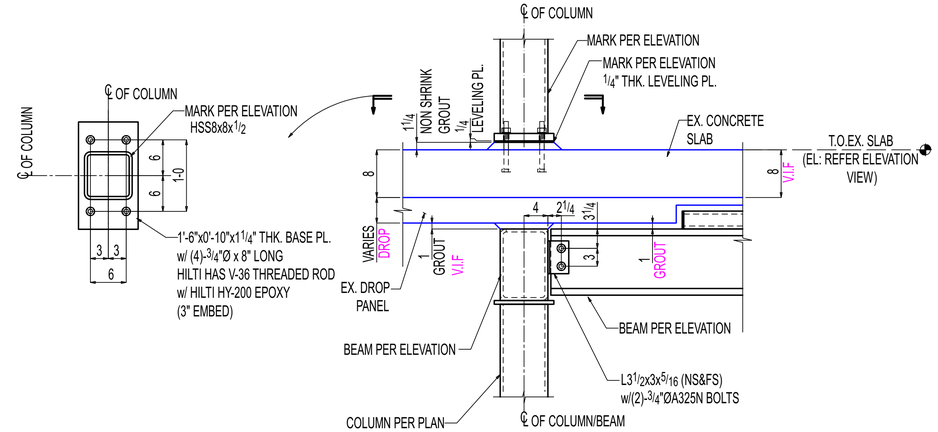

DETAIL-2

E-03.02
(REF:10/S308)

OTHERS NOT SHOWN FOR CLARITY

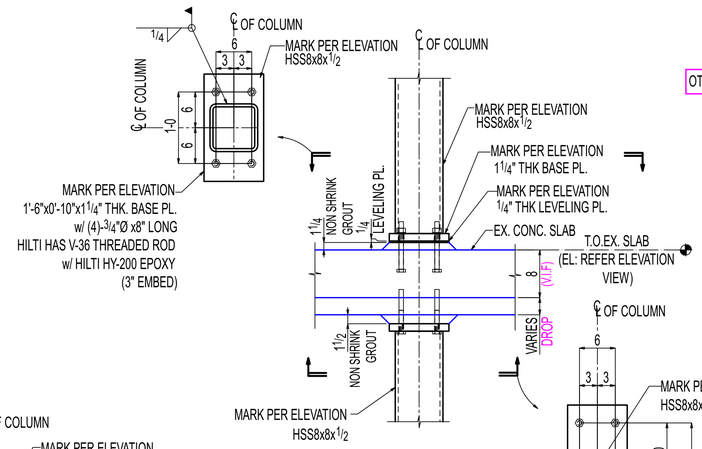

DETAIL-3

E-03.02
(REF:10/S308)

OTHERS NOT SHOWN FOR CLARITY

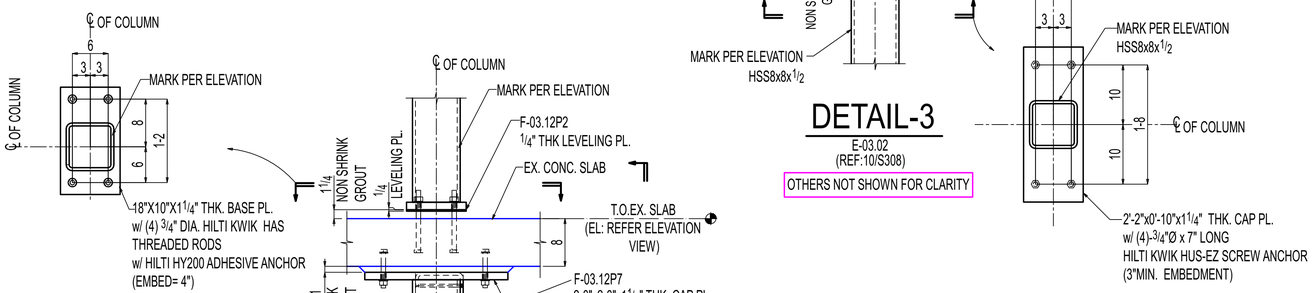

DETAIL-4

E-03.02
(REF:14/S308)

OTHERS NOT SHOWN FOR CLARITY

ERECTOR NOTE:
FIELD DRILL HOLES ON CAP PLATE
AFTER REVIEWING SLAB TRANSITION IN FIELD

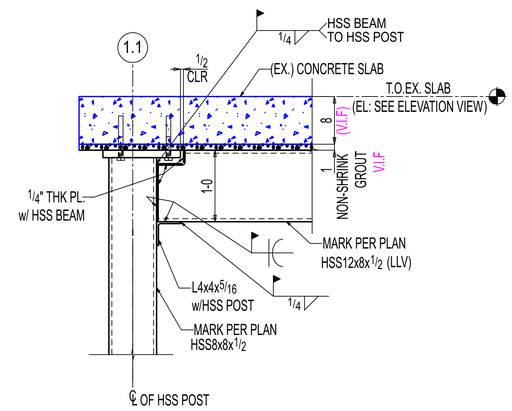

DETAIL-5

E-03.04
(REF:2/S203)

OTHERS NOT SHOWN FOR CLARITY

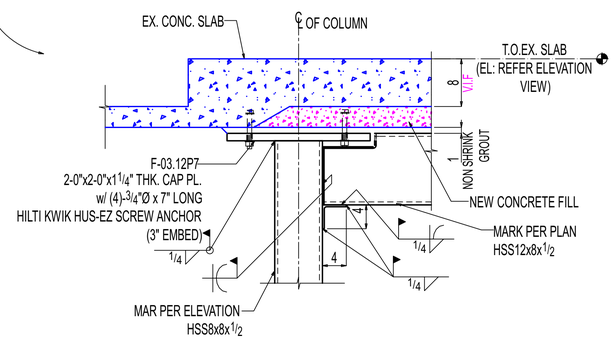

OPTION-01

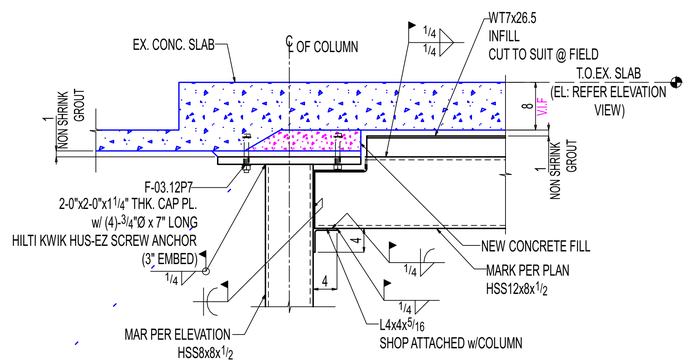

OPTION-02

ERECTOR NOTE:
EITHER PROVIDE CONCRETE FILL BY OPTION 1
OE HSS FILLER BY OPTION-2 BASED ON
SITE CONDITION.

General Notes

*Structural steel shall conform to ASTM-A992.
*Structural SQR/RND.tubing conform to ASTM A500 Grade C
*Pipe shall conform to ASTM A53, Grade B.
*Channels, Angles and plates shall conform to A36.
*All bolts shall be 3/4" High strength in accordance with ASTM A325 (UNO)
*Welding Electrodes for Carbon steel :E70xx

# of Copies	Revision/ Issue	Destination	Date
1	0	For Construction	09-25-2025
3	C	For Re-Approval	08-22-2025
2	B	For Re-Approval	06-23-2025
1	A	For Approval	02-27-2025

IRON FABRICATION SERVICES, LLC.

3029 M. Street, NW, Suite 202
Washington, DC 20007
Tel: 202-800-5599
Fax: 202-478-0303

Project Name and Address
MARYLAND AVENUE

Location: **1250 MARYLAND AVENUE SW WASHINGTON, DC 20024**

Contractor:
BALFOUR BEATTY

Approved for Fabrication by:	Signature

Contract # **224009** Drawing # **E-03.05**

Contract Item: **SOW #03 -SOUTH WEST FRAMING LEVEL P4 TO LEVEL 08**

Ref: **SOW -03:S202,S203 & S204**

Date **01/ 20/ 2025**

Scale VARIES

Drawing Title: **SOW #03 -SOUTH WEST FRAMING SECTIONS**

NOT IN USE

DETAIL-6

NOT IN USE

DETAIL-7

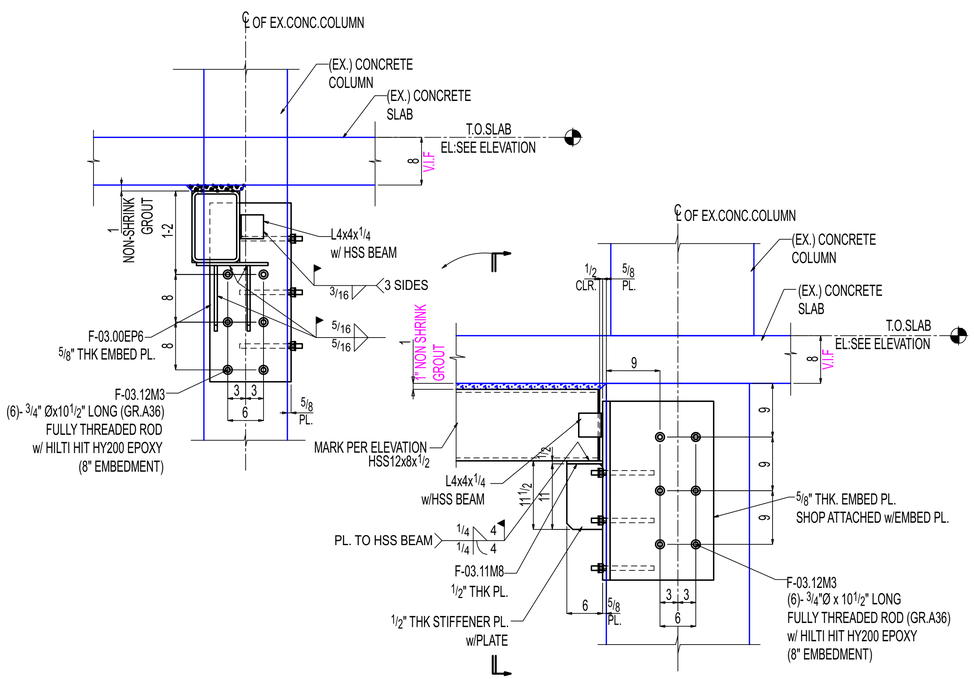

DETAIL-8

E-03.04
(REF: 14A/S204)

OTHERS NOT SHOWN FOR CLARITY

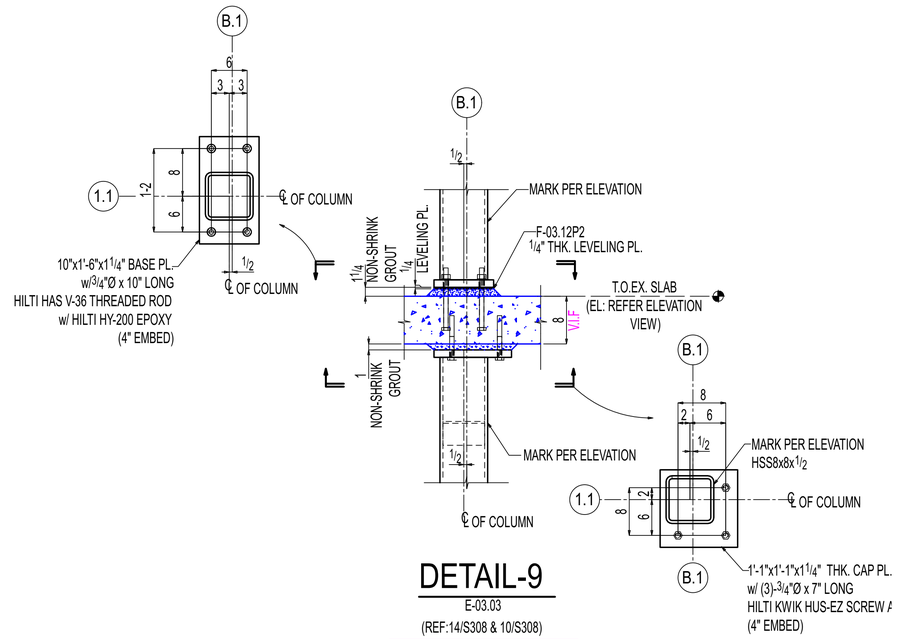

DETAIL-9

E-03.03
(REF:14/S308 & 10/S308)

OTHERS NOT SHOWN FOR CLARITY

General Notes

*Structural steel shall conform to ASTM-A992.
*Structural SQR/RND.tubing conform to ASTM A500 Grade C
*Pipe shall conform to ASTM A53, Grade B.
*Channels, Angles and plates shall conform to A36.
*All bolts shall be 3/4" High strength in accordance with ASTM A325 (UNO)
*Welding Electrodes for Carbon steel :E70xx

# of Copies	Revision/ Issue	Destination	Date
1	0	For Construction	09-25-2025
3	C	For Re-Approval	08-22-2025
2	B	For Re-Approval	06-23-2025
1	A	For Approval	02-27-2025

IRON FABRICATION SERVICES, LLC.

3029 M. Street, NW, Suite 202
Washington, DC 20007
Tel: 202-800-5599
Fax: 202-478-0303

Project Name and Address
MARYLAND AVENUE

Location: **1250 MARYLAND AVENUE SW WASHINGTON, DC 20024**

Contractor:
BALFOUR BEATTY

Approved for Fabrication by:	Signature

Contract # **224009** Drawing # **E-03.06**

Contract Item: **SOW #03 -SOUTH WEST FRAMING LEVEL P4 TO LEVEL 08**

Ref:
SOW -03:S202,S203 & S204

Date **01/ 20/ 2025**

Scale VARIES

Drawing Title:
SOW #03 -SOUTH WEST FRAMING SECTIONS

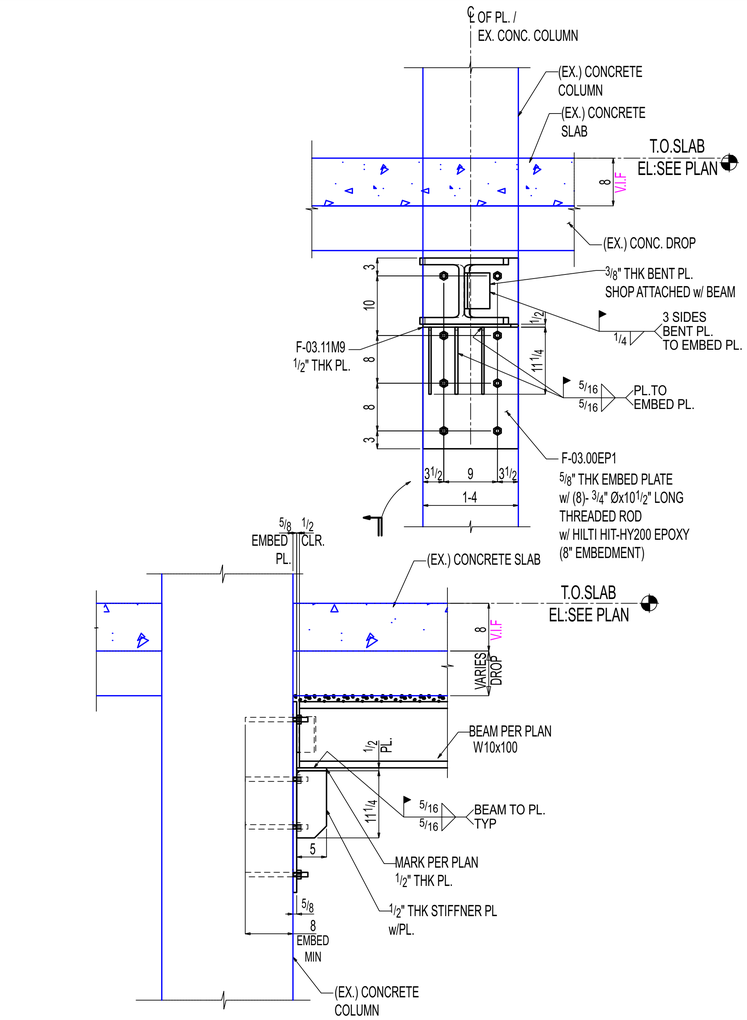

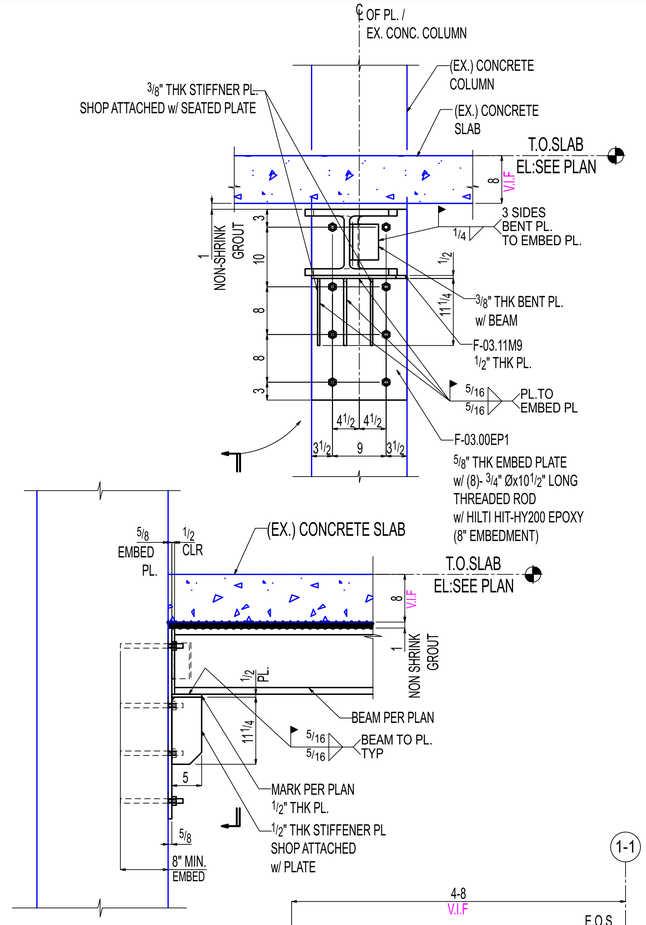

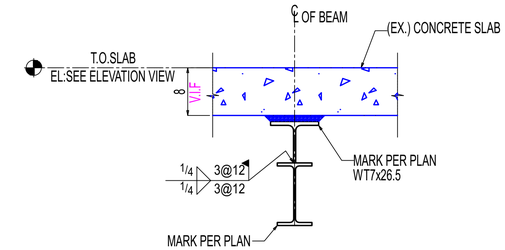

D-D

E-03.01F
(REF: 5A/S203)

OTHERS NOT SHOWN FOR CLARITY

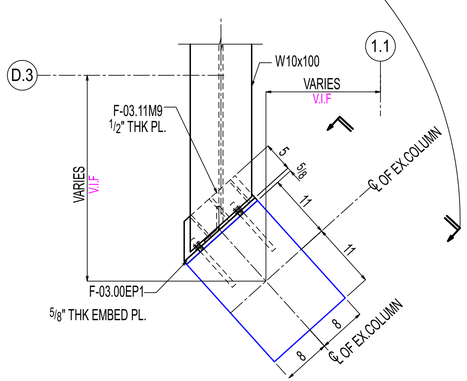

DETAIL-10

E-03.00
(REF: 3/S202,3A/S202,3B/S202)

OTHERS NOT SHOWN FOR CLARITY

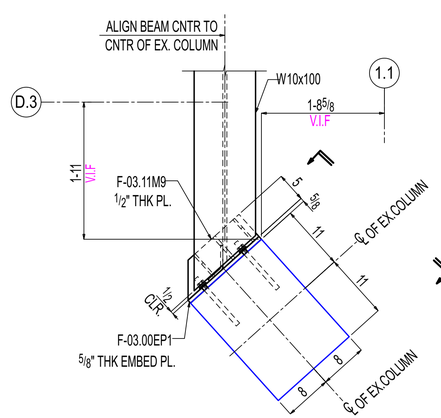

DETAIL-11

E-03.00A,E-03.01,E-03.01A
(REF: 3/S202,3A/S202,3B/S202)

OTHERS NOT SHOWN FOR CLARITY

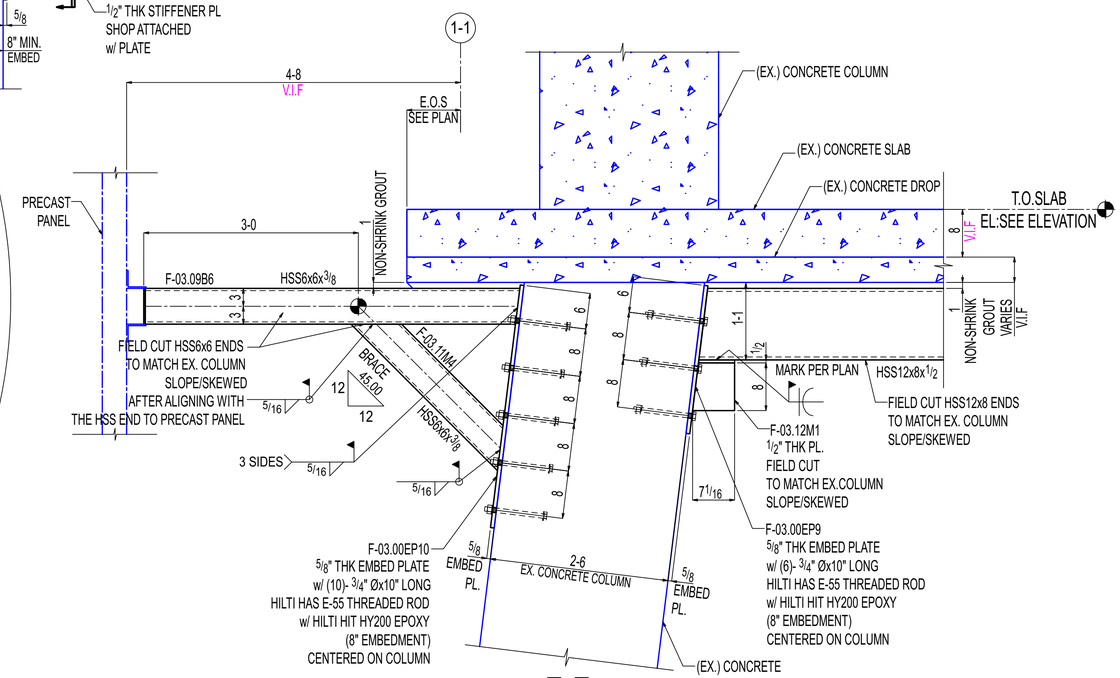

F-F

E-03.01B,E-03.01F
(REF: 4/S203)

OTHERS NOT SHOWN FOR CLARITY

General Notes

*Structural steel shall conform to ASTM-A992.
*Structural SQR/RND.tubing conform to ASTM A500 Grade C
*Pipe shall conform to ASTM A53, Grade B.
*Channels, Angles and plates shall conform to A36.
*All bolts shall be 3/4" High strength in accordance with ASTM A325 (UNO)
*Welding Electrodes for Carbon steel :E70xx

# of Copies	Revision/ Issue	Destination	Date
1	0	For Construction	09-25-2025
3	C	For Re-Approval	08-22-2025
2	B	For Re-Approval	06-23-2025
1	A	For Approval	02-27-2025

IRON FABRICATION SERVICES, LLC.

3029 M. Street, NW, Suite 202
Washington, DC 20007
Tel: 202-800-5599
Fax: 202-478-0303

Project Name and Address
MARYLAND AVENUE

Location: **1250 MARYLAND AVENUE SW WASHINGTON, DC 20024**

Contractor:
BALFOUR BEATTY

Approved for Fabrication by:	Signature

Contract # **224009** Drawing # **E-03.07**

Contract Item: **SOW #03 -SOUTH WEST FRAMING LEVEL P4 TO LEVEL 08**

Ref:
SOW -03:S202,S203

Date **01/ 23/ 2025**

Scale VARIES

Drawing Title: **SOW #03 -SOUTH WEST FRAMING SECTIONS**

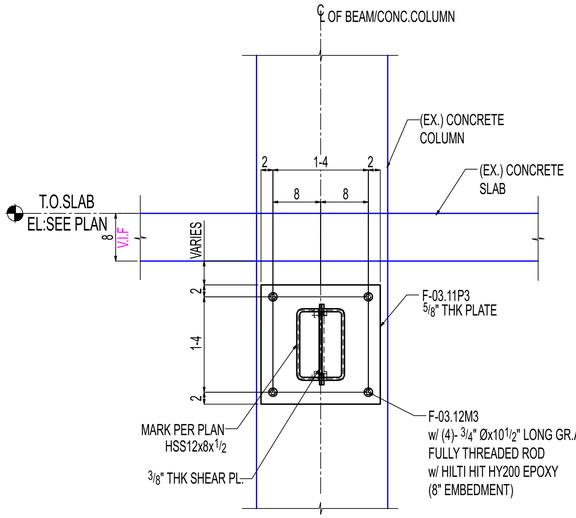

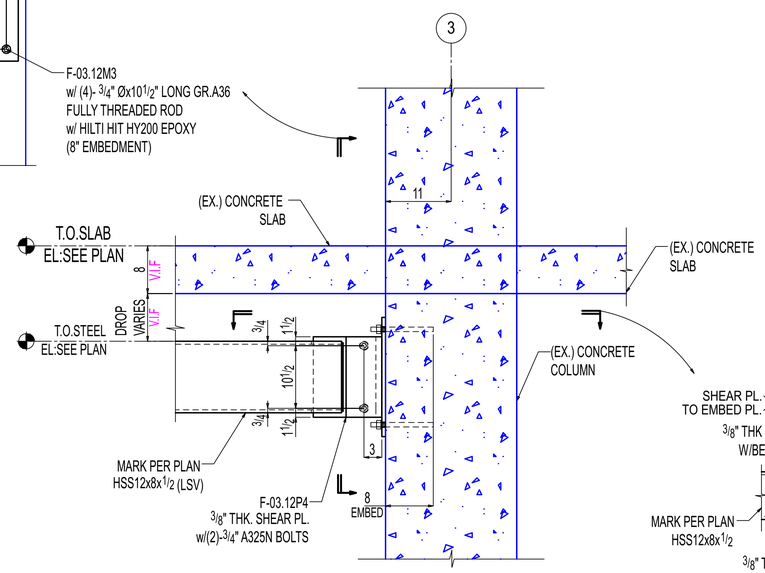

G-G

E-03.00A,E-03.01,E-03.01A,E-03.01B
(REF: 5/S202)

OTHERS NOT SHOWN FOR CLARITY

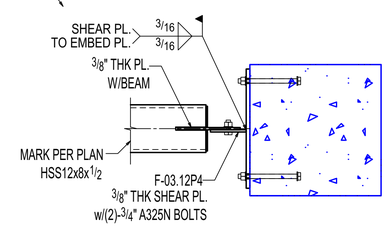

NOT IN USE

P-P

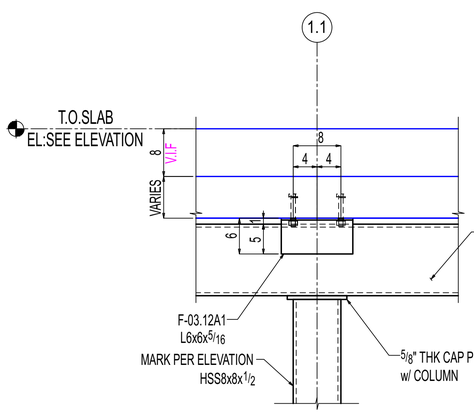

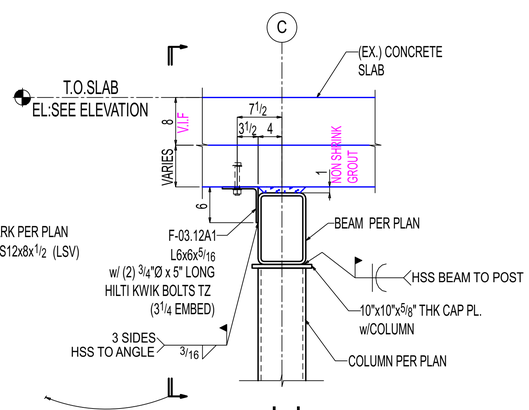

J-J

E-03.00A,E-03.01,E-03.01A,E-03.01B,E-03.01C,
E-03.01D,E-03.01E,E-03.04,E-03.01F
(REF: 5B/S202)

OTHERS NOT SHOWN FOR CLARITY

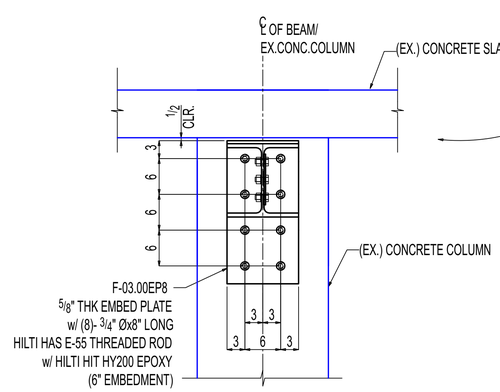

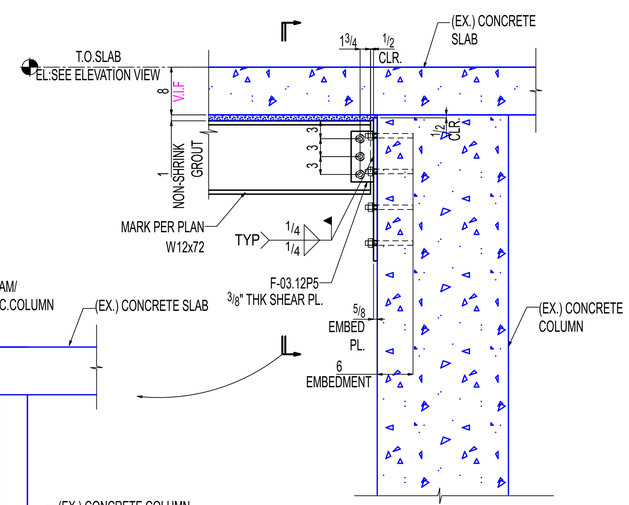

K-K

E-03.01B
(REF:6/S309,3A/S309,3B/S309)

OTHERS NOT SHOWN FOR CLARITY

General Notes

*Structural steel shall conform to ASTM-A992.
*Structural SQR/RND.tubing conform to ASTM A500 Grade C
*Pipe shall conform to ASTM A53, Grade B.
*Channels, Angles and plates shall conform to A36.
*All bolts shall be 3/4" High strength in accordance with ASTM A325 (UNO)
*Welding Electrodes for Carbon steel :E70xx

# of Copies	Revision/ Issue	Destination	Date
1	0	For Construction	09-25-2025
3	C	For Re-Approval	08-22-2025
2	B	For Re-Approval	06-23-2025
1	A	For Approval	02-27-2025

IRON FABRICATION SERVICES, LLC.

3029 M. Street, NW, Suite 202
Washington, DC 20007
Tel: 202-800-5599
Fax: 202-478-0303

Project Name and Address
MARYLAND AVENUE

Location: **1250 MARYLAND AVENUE SW WASHINGTON, DC 20024**

Contractor:
BALFOUR BEATTY

Approved for Fabrication by:	Signature

Contract # **224009**
Drawing # **E-03.08**

Contract Item: **SOW #03 -SOUTH WEST FRAMING LEVEL P4 TO LEVEL 08**

Ref:
SOW -03:S202,S203 & S204

Date
01/ 23/ 2025

Scale
VARIES

Drawing Title:
SOW #03 -SOUTH WEST FRAMING SECTIONS

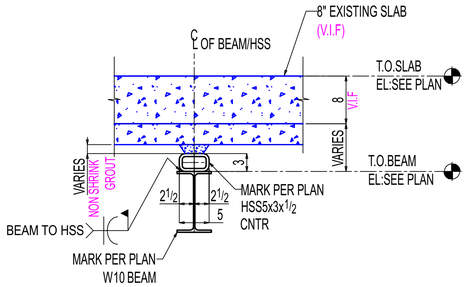

L-L

E-03.01B,E-03.01C,E-03.01D,E-03.01E,E-03.01F
(REF: 3A/S203)

OTHERS NOT SHOWN FOR CLARITY

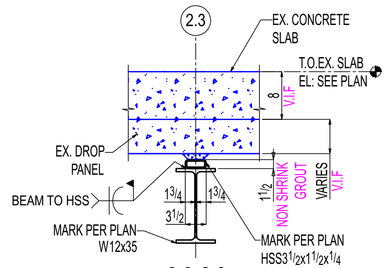

M-M

E-03.01F
(REF: 5/S203,3A/S203 SIM)

OTHERS NOT SHOWN FOR CLARITY

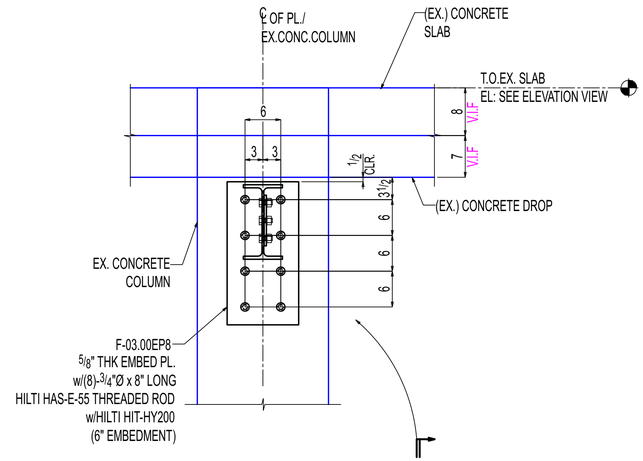

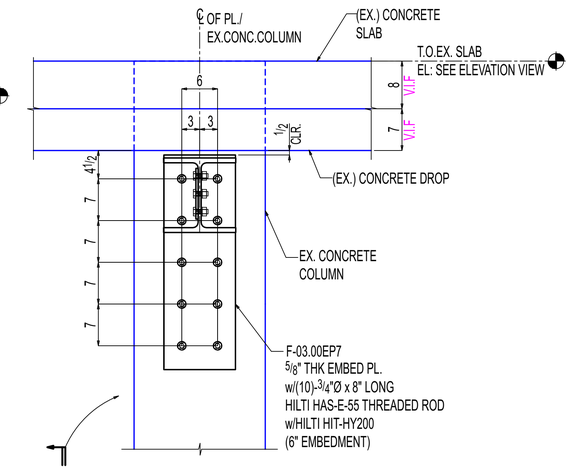

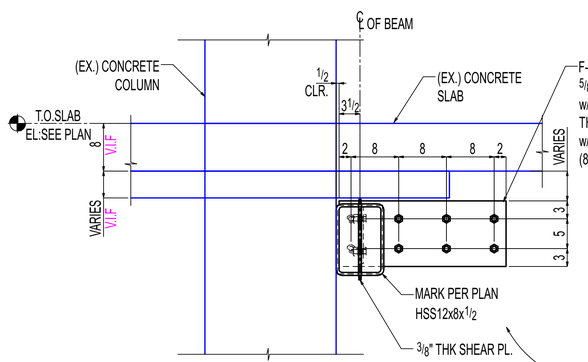

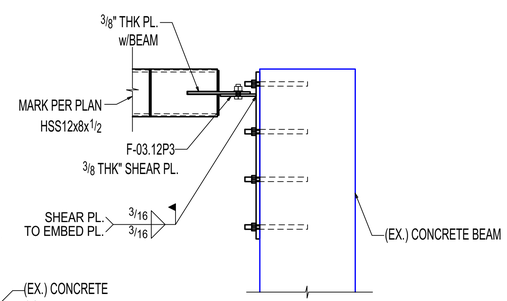

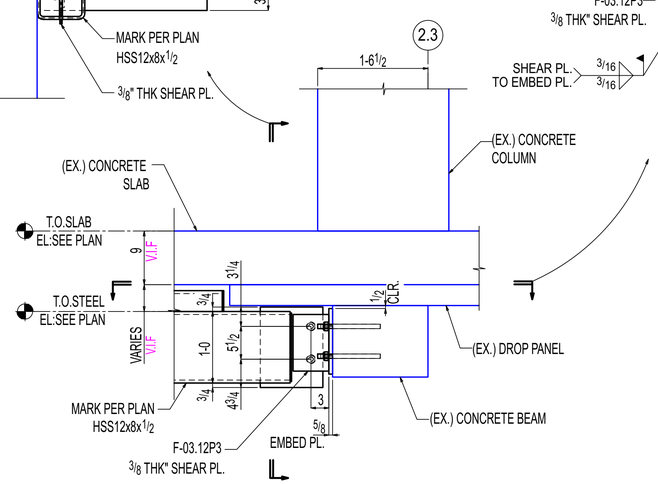

DETAIL-12

E-03.04
(REF: 8/S202)

OTHERS NOT SHOWN FOR CLARITY

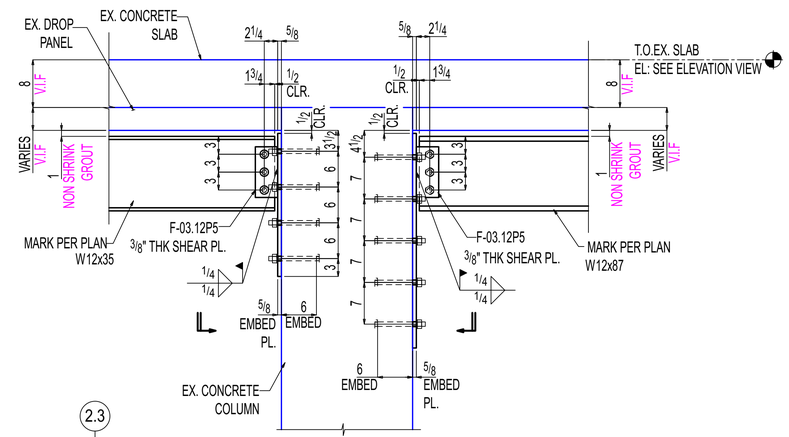

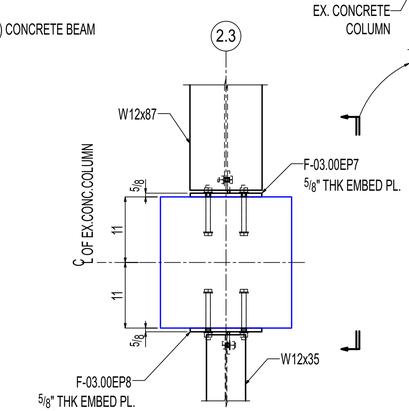

DETAIL-13

E-03.01B
(REF: 5/S203)

OTHERS NOT SHOWN FOR CLARITY

General Notes

*Structural steel shall conform to ASTM-A992.
*Structural SQR/RND.tubing conform to ASTM A500 Grade C
*Pipe shall conform to ASTM A53, Grade B.
*Channels, Angles and plates shall conform to A36.
*All bolts shall be 3/4" High strength in accordance with ASTM A325 (UNO)
*Welding Electrodes for Carbon steel :E70xx

# of Copies	Revision/ Issue	Destination	Date
1	0	For Construction	09-25-2025
3	C	For Re-Approval	08-22-2025
2	B	For Re-Approval	06-23-2025
1	A	For Approval	02-27-2025

IRON FABRICATION SERVICES, LLC.

3029 M. Street, NW, Suite 202
Washington, DC 20007
Tel: 202-800-5599
Fax: 202-478-0303

Project Name and Address
MARYLAND AVENUE

Location: **1250 MARYLAND AVENUE SW WASHINGTON, DC 20024**

Contractor:
BALFOUR BEATTY

Approved for Fabrication by:	Signature

Contract # **224009** Drawing # **E-03.09**

Contract Item: **SOW #03 -SOUTH WEST FRAMING LEVEL P4 TO LEVEL 08**

Ref:
SOW -03:S202&S203

Date **01/ 20/ 2025**

Scale VARIES

Drawing Title:
SOW #03 -SOUTH WEST FRAMING SECTIONS

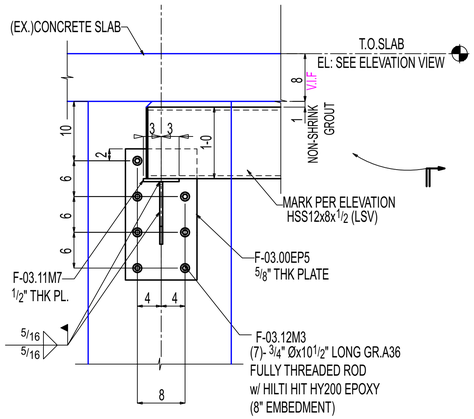

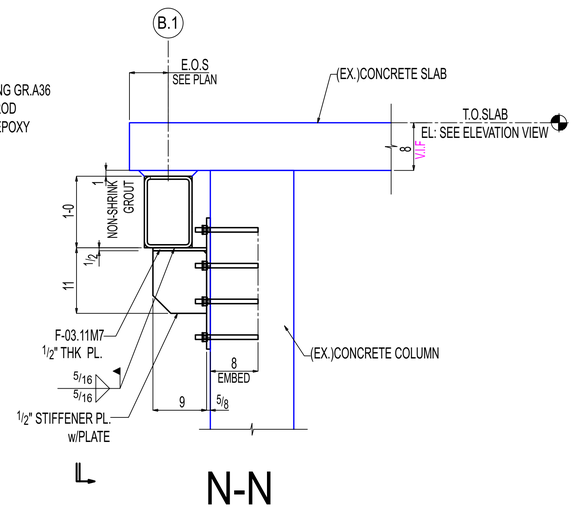

N-N

E-03.01B,E-03.01F,E-03.04
(REF: 4/S202)

OTHERS NOT SHOWN FOR CLARITY

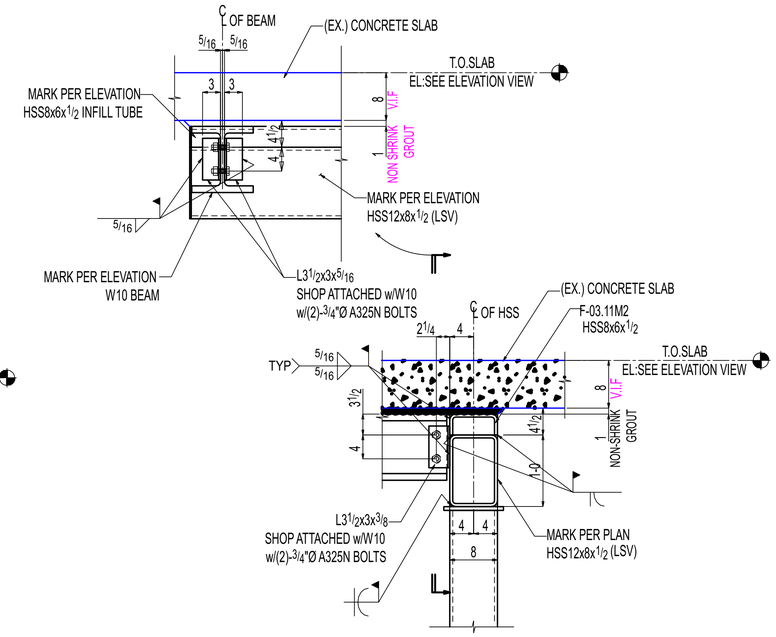

P-P

E-03.00
(REF: 8/S202)

OTHERS NOT SHOWN FOR CLARITY

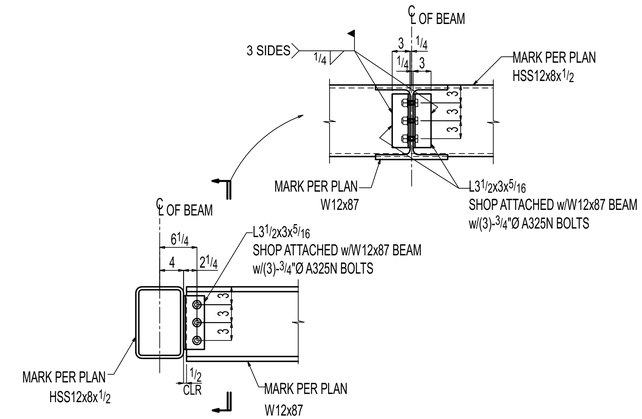

R-R

E-03.01B
(REF:5/S203 & 6/S203)

OTHERS NOT SHOWN FOR CLARITY

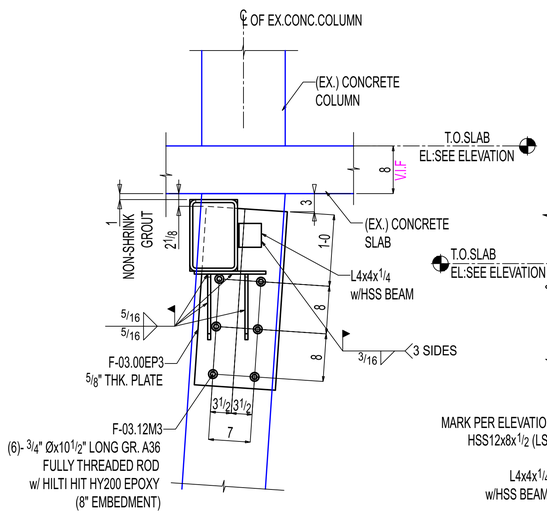

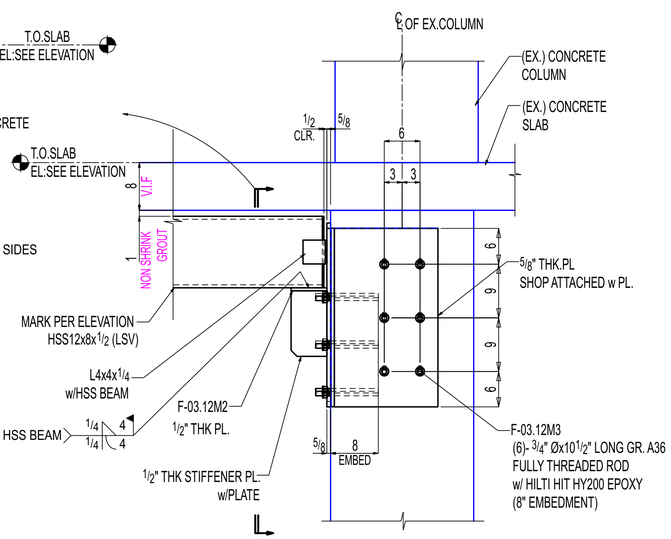

DETAIL-14

E-03.04
(REF: 14A/S204)

OTHERS NOT SHOWN FOR CLARITY

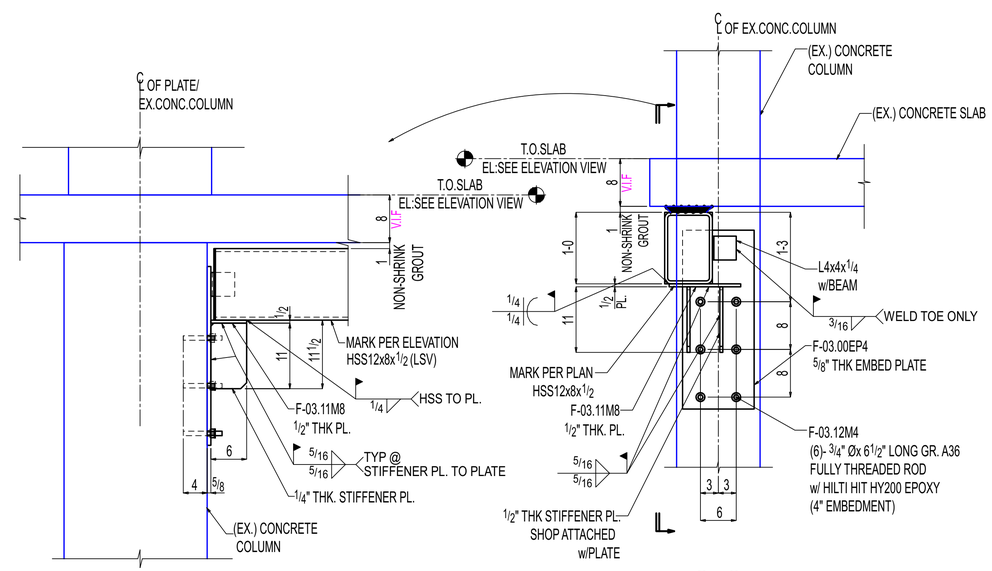

Q-Q

E-03.04
(REF:6A/S204)

OTHERS NOT SHOWN FOR CLARITY

General Notes

*Structural steel shall conform to ASTM-A992.
*Structural SQR/RND.tubing conform to ASTM A500 Grade C
*Pipe shall conform to ASTM A53, Grade B.
*Channels, Angles and plates shall conform to A36.
*All bolts shall be 3/4" High strength in accordance with ASTM A325 (UNO)
*Welding Electrodes for Carbon steel :E70xx

# of Copies	Revision/ Issue	Destination	Date
1	0	For Construction	09-25-2025
3	C	For Re-Approval	08-22-2025
2	B	For Re-Approval	06-23-2025
1	A	For Approval	02-27-2025

IRON FABRICATION SERVICES, LLC.

3029 M. Street, NW, Suite 202
Washington, DC 20007
Tel: 202-800-5599
Fax: 202-478-0303

Project Name and Address
MARYLAND AVENUE

Location: **1250 MARYLAND AVENUE SW WASHINGTON, DC 20024**

Contractor:
BALFOUR BEATTY

Approved for Fabrication by:	Signature

Contract # **224009** | Drawing # **E-03.10**

Contract Item: **SOW #03 -SOUTH WEST FRAMING LEVEL P4 TO LEVEL 08**

Ref:
SOW -03:S202&S203

Date **01/ 20/ 2025**

Scale VARIES

Drawing Title:
SOW #03 -SOUTH WEST FRAMING SECTIONS