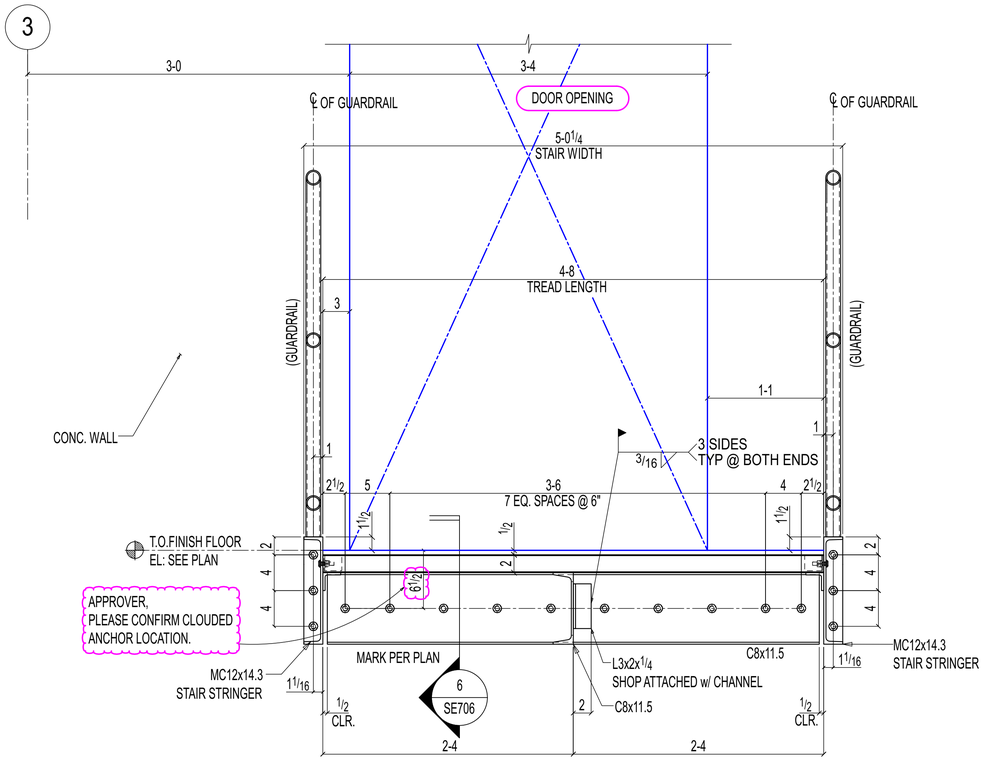

1 SE706 ELEVATION VIEW

OTHER NOT SHOWN FOR CLARITY

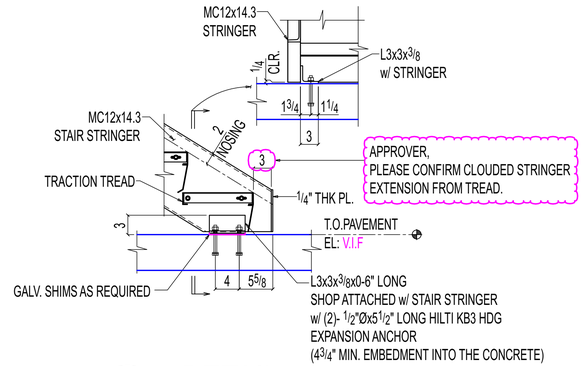

2 SE706 DETAIL

(REF:16/A380)

OTHERS NOT SHOWN FOR CLARITY

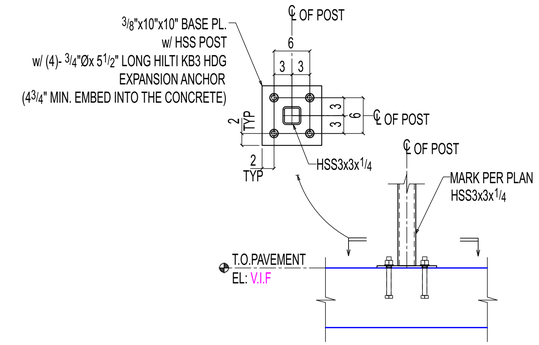

3 SE706 DETAIL

OTHERS NOT SHOWN FOR CLARITY

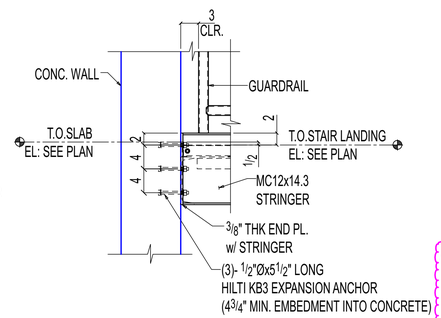

4 SE706 DETAIL

OTHERS NOT SHOWN FOR CLARITY

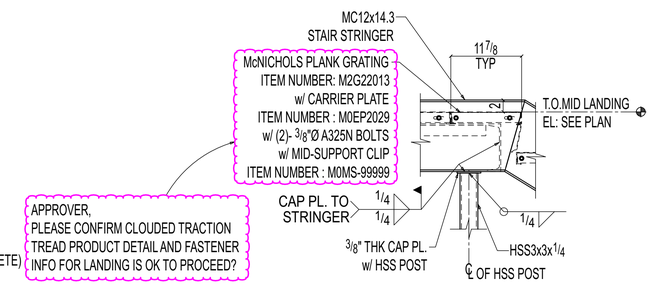

5 SE706 DETAIL

OTHERS NOT SHOWN FOR CLARITY

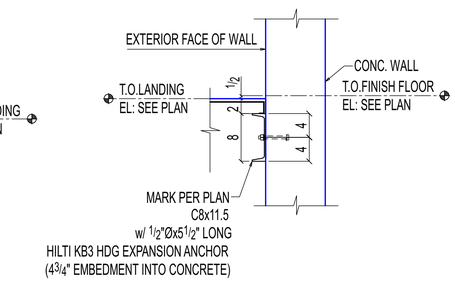

6 SE706 SECTION

OTHERS NOT SHOWN FOR CLARITY

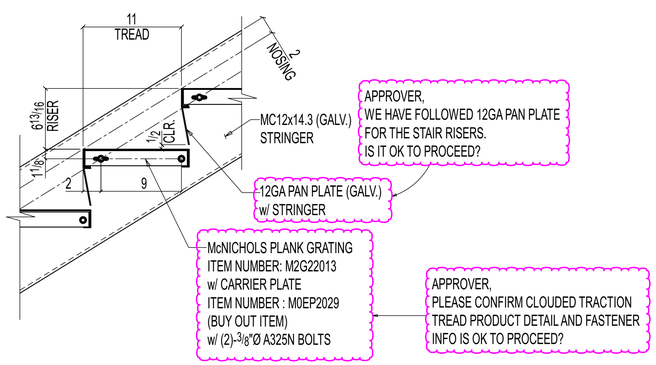

TYPICAL STRINGER & TREAD DETAIL

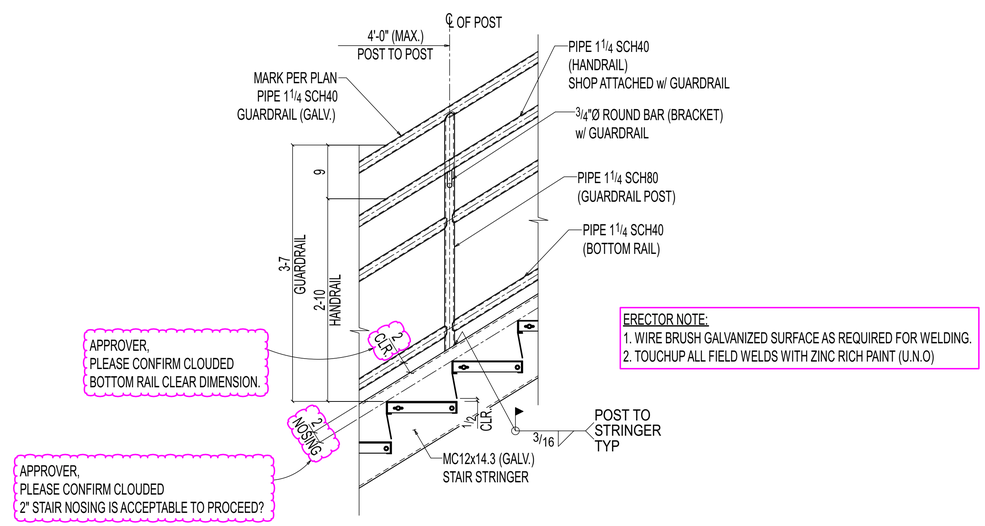

ERECTOR NOTE:
1. WIRE BRUSH GALVANIZED SURFACE AS REQUIRED FOR WELDING.
2. TOUCHUP ALL FIELD WELDS WITH ZINC RICH PAINT (U.N.O)

TYPICAL GUARDRAIL DETAIL

(REF: 8/A380)

REVISIONS

REV#	DWN BY	DESCRIPTION	DATE
A	SRP	ISSUED FOR APPROVAL	Jun 16 2025

THE INFORMATION NOTED HEREON THIS DRAWING IS THE PROPERTY OF STEEL FAB ENTERPRISES, INC. AND SHALL NOTED BE USED WITHOUT WRITTEN CONSENT.

STEEL FAB
ENTERPRISES, LLC
AISC CERTIFIED FABRICATOR AND ERECTOR
MISCELLANEOUS METALS FABRICATOR AND ERECTORS
623 BAUMGARDNER ROAD, LANCASTER, PA 17603
TEL. (717)464-0330 FAX (717)464-9464
WWW.STEELFABENTERPRISES.COM

PROJECT OWNER : CK CAPITAL, LLC

PROJECT DESCRIPTION : CLEVELAND BROTHERS-MILESBURG

PROJECT ADDRESS : 4025N. EAGLE VALLEY ROAD, HOWARD, PA 16841

CONTRACTOR : KINSLEY CONSTRUCTION, INC.

DRAWN BY : BAS	DATE : 5-20-25	PROJ. NO. : 25012	REV # A
CHECKED BY : SRP	DATE : 5-20-25	DWG NO. : SE706	

DWG DESCRIPTION : SECTIONS