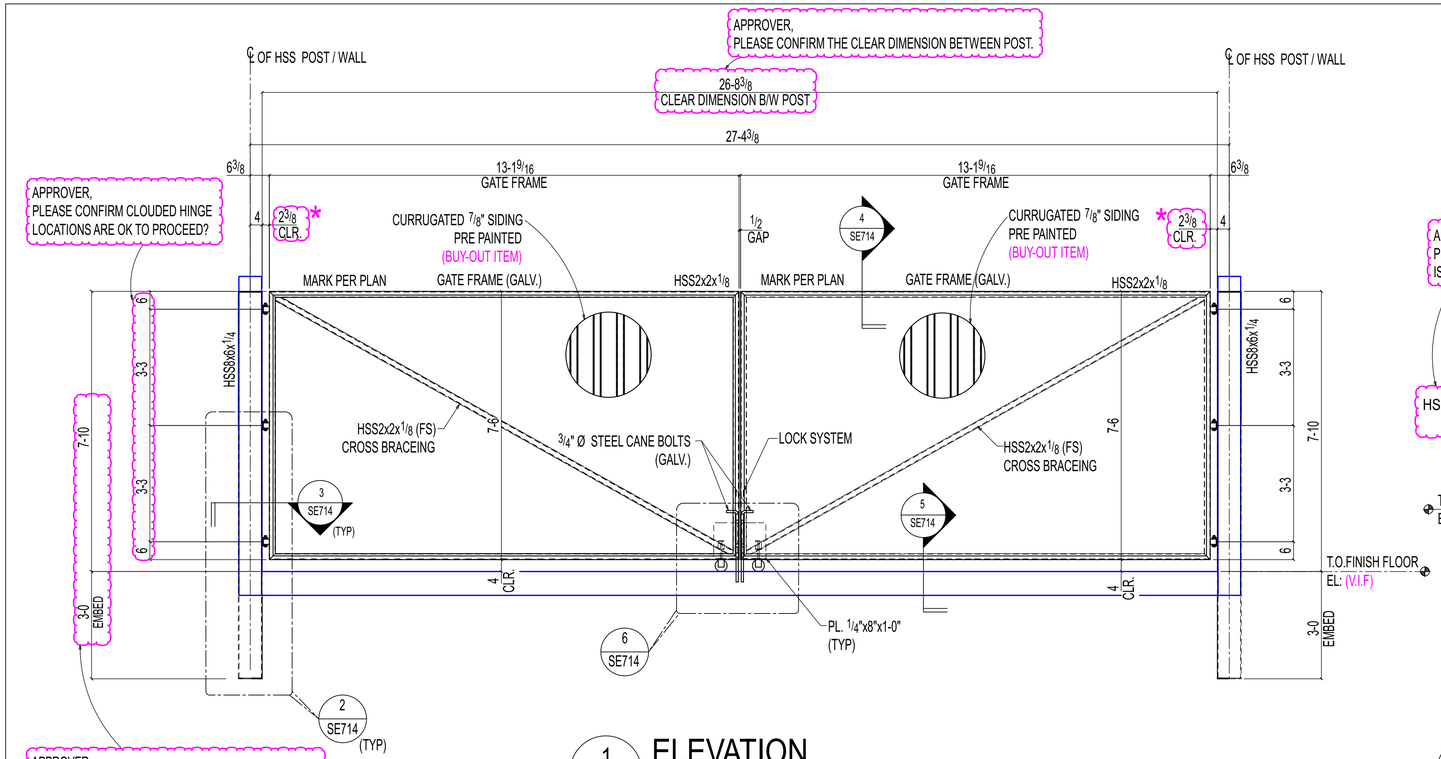

1 SE714 ELEVATION

(REF: 2/A182)

OTHERS NOT SHOWN FOR CLARITY

NOTE:
ALL GATE STEELS AND COLUMNS ARE GALVANIZED AND PAINTED (MT1).

* -APPROVER,
PLEASE CONFIRM CLOUDED POST TO GATE FRAME
CLEAR DIMENSION IS OK TO PROCEED?

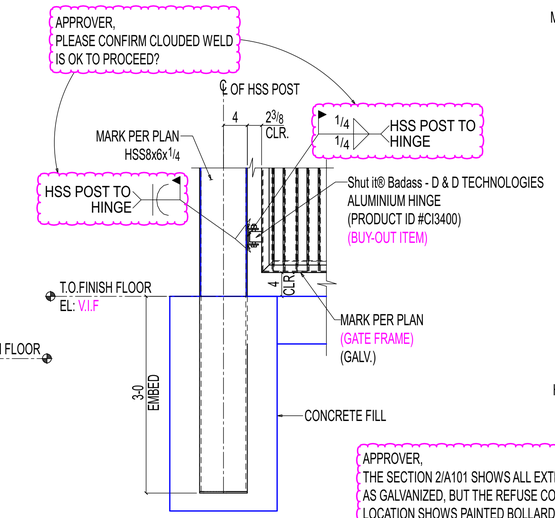

2 SE714 DETAIL

OTHERS NOT SHOWN FOR CLARITY

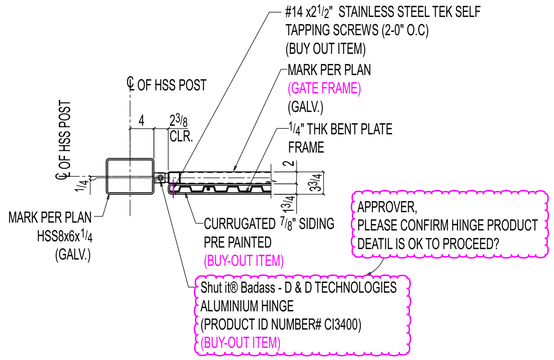

3 SE714 SECTION

OTHERS NOT SHOWN FOR CLARITY

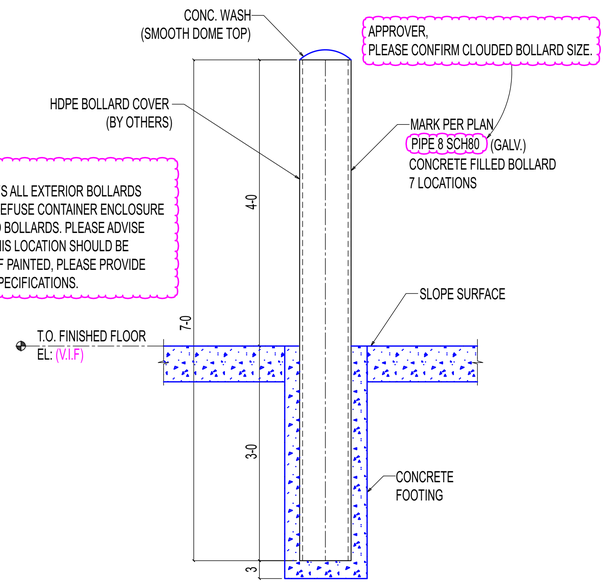

APPROVER,
THE SECTION 2/A101 SHOWS ALL EXTERIOR BOLLARDS
AS GALVANIZED, BUT THE REFUSE CONTAINER ENCLOSURE
LOCATION SHOWS PAINTED BOLLARDS. PLEASE ADVISE
WHETHER BOLLARDS AT THIS LOCATION SHOULD BE
GALVANIZED OR PAINTED. IF PAINTED, PLEASE PROVIDE
CLEANING AND PAINTING SPECIFICATIONS.

TYPICAL PIPE BOLLARD DETAIL

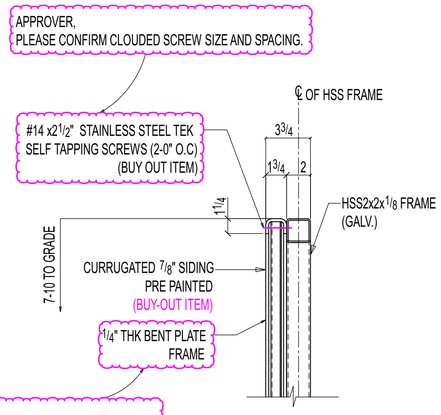

4 SE714 SECTION

OTHERS NOT SHOWN FOR CLARITY

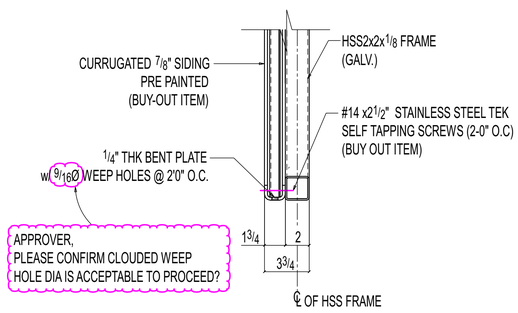

5 SE714 SECTION

OTHERS NOT SHOWN FOR CLARITY

ERECTOR NOTE:
1. WIRE BRUSH GALVANIZED SURFACE AS REQUIRED FOR WELDING.
2. TOUCHUP ALL FIELD WELDS WITH ZINC RICH PAINT (U.N.O)

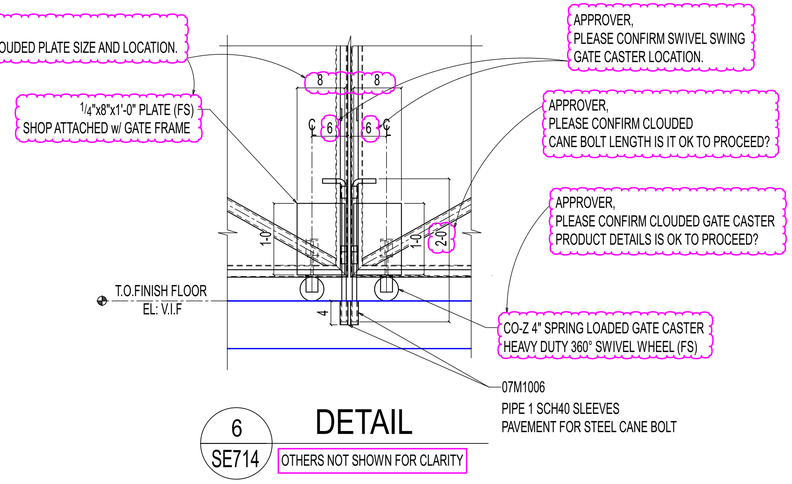

6 SE714 DETAIL

OTHERS NOT SHOWN FOR CLARITY

REVISIONS

REV#	DWN BY	DESCRIPTION	DATE
A	SRP	ISSUED FOR APPROVAL	Jun 16 2025

THE INFORMATION NOTED HEREON THIS DRAWING IS THE
PROPERTY OF STEEL FAB ENTERPRISES, INC. AND SHALL
NOTED BE USED WITHOUT WRITTEN CONSENT.

STEEL FAB
ENTERPRISES, LLC
MISCELLANEOUS METALS FABRICATOR AND ERECTORS
623 BAUMGARDNER ROAD, LANCASTER, PA 17603
TEL. (717)464-0330 FAX (717)464-9464
WWW.STEELFABENTERPRISES.COM

AISC CERTIFIED FABRICATOR AND ERECTOR

PROJECT OWNER : CK CAPITAL, LLC

PROJECT DESCRIPTION : CLEVELAND BROTHERS-MILESBURG

PROJECT ADDRESS : 4025N. EAGLE VALLEY ROAD, HOWARD, PA 16841

CONTRACTOR : KINSLEY CONSTRUCTION, INC.

DRAWN BY : BAS	DATE : 5-20-25	PROJ. NO. : 25012	REV # A
CHECKED BY : SRP	DATE : 5-20-25	DWG NO. : SE714	

DWG DESCRIPTION : ELEVATION VIEW & SECTION