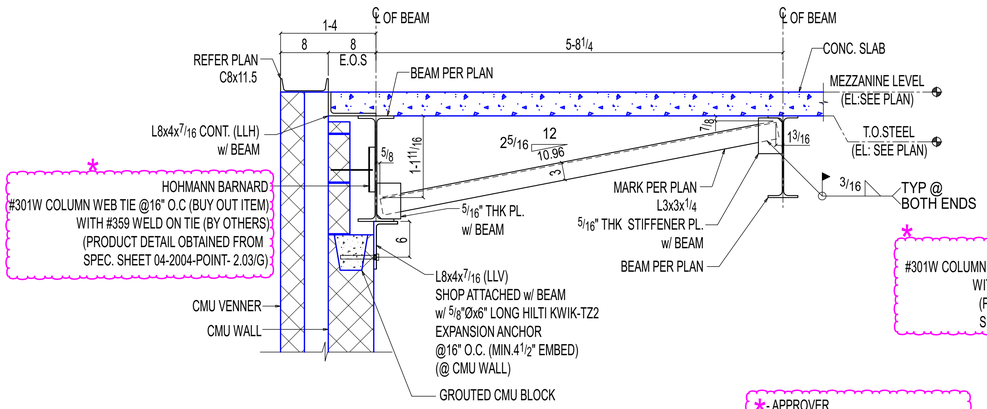

1 SE220 **SECTION**

(REF: 10/S500)

OTHERS NOT SHOWN FOR CLARITY

*- APPROVER,
PLEASE CONFIRM CLOUDED MASONARY
ANCHOR PRODUCT DETAIL AND SPACING
ARE OK TO PROCEED?

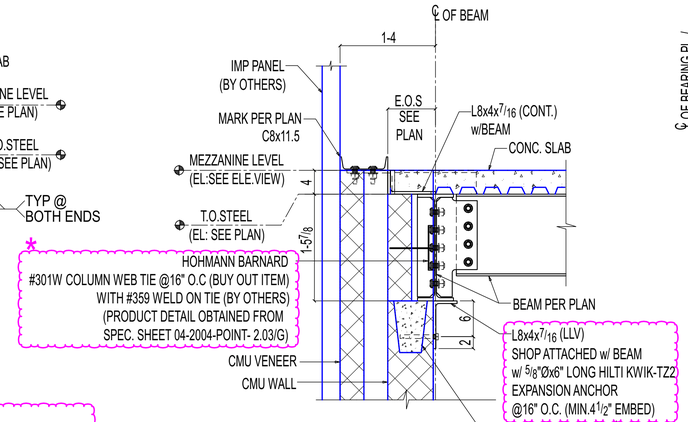

2 SE220 **SECTION**

(REF: 9/S500)

APPROVER
PLEASE ADVISE ON THE REQUIREMENT OF SLOT HOLES
FOR FIELD ADJUSTMENT ON THESE ANGLE SO THAT WE
CAN FIELD WELD IT TO BEAM AFTER ADJUSTMENT.
IF REQUIRED THE PLEASE PROVIDE SLOT LENGTH.

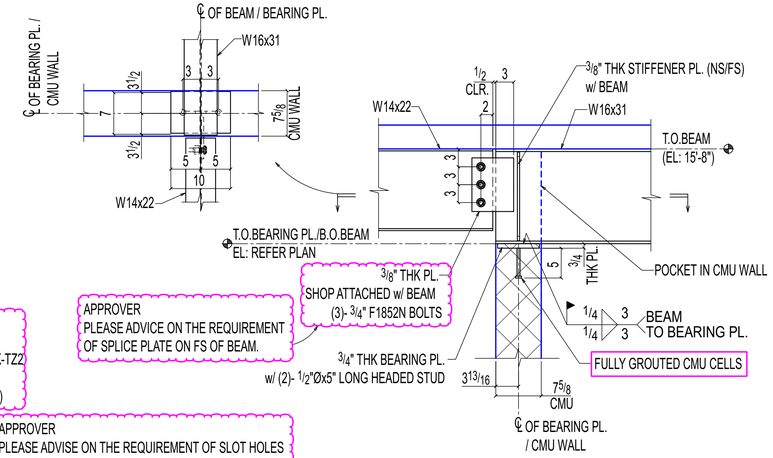

APPROVER
PLEASE ADVICE ON THE REQUIREMENT
OF SPLICE PLATE ON FS OF BEAM.

3 SE220 **SECTION**

(REF: 1/S303,3/S501)

OTHERS NOT SHOWN FOR CLARITY

APPROVER
WE HAVE LOCATED THE HOLE ON THE GAGE LINE
OF THE ANGLE AT 2 1/2" AS SHOWN, INSTEAD OF 2"
AS INDICATED ON THE STRUCTURAL DRAWING.
PLEASE CONFIRM IF THIS IS ACCEPTABLE.

APPROVER
WE HAVR PROVIDED 1" SHORT SLOT
HOLE FOR FIELD ADJUSTMENT.
PLEASE CONFIRM IF IT IS ACCEPTABLE.

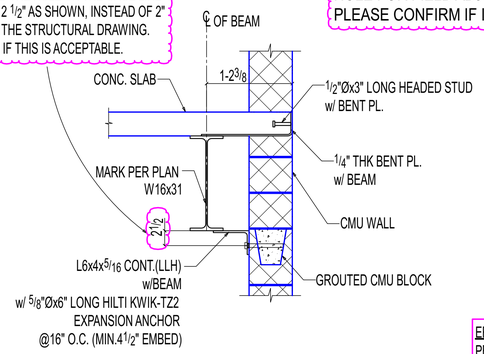

4 SE220 **SECTION**

(OTHERS NOT SHOWN FOR CLARITY)

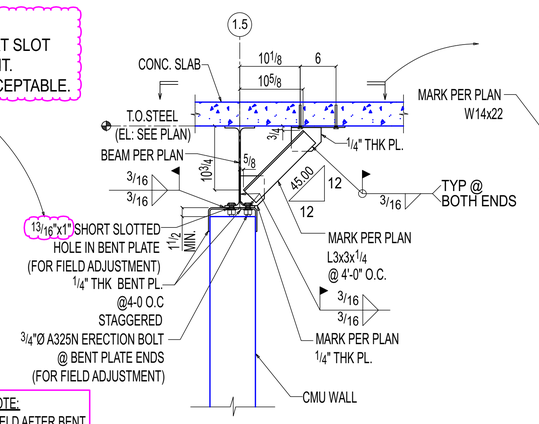

ERECTOR NOTE:
PERFORM WELD AFTER BENT
PLATE FIELD ADJUSTED.

5 SE220 **SECTION**

(REF: 1/S302)

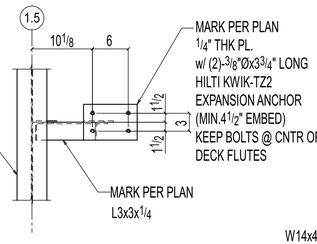

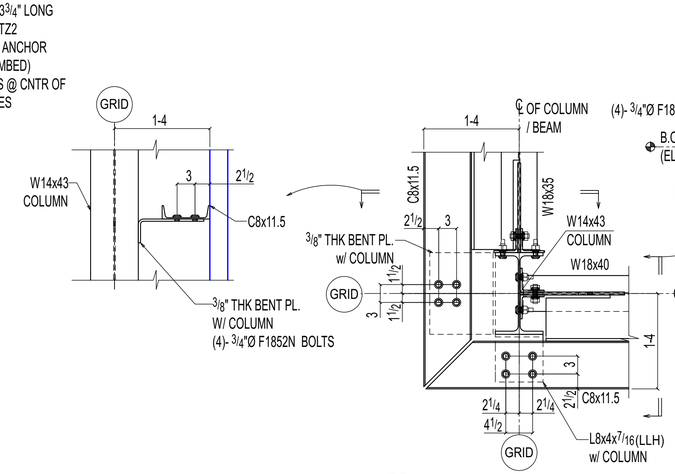

6 SE220 **SECTION**

(REF: 1/S304)

OTHERS NOT SHOWN FOR CLARITY

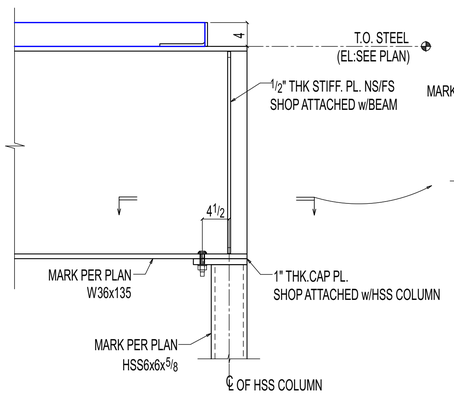

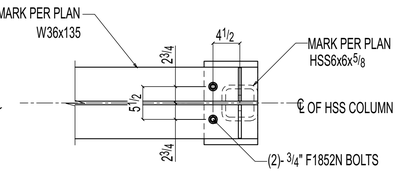

7 SE220 **SECTION**

(REF: 7/S303)

OTHERS NOT SHOWN FOR CLARITY

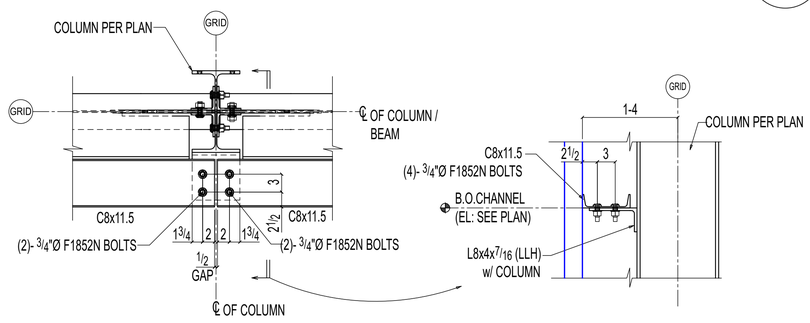

8 SE220 **SECTION**

(REF: 3/S304)

OTHERS NOT SHOWN FOR CLARITY

REVISIONS

REV#	DWN BY	DESCRIPTION	DATE
A	SRP	ISSUED FOR APPROVAL	Jun 11 2025

THE INFORMATION NOTED HEREON THIS DRAWING IS THE
PROPERTY OF STEEL FAB ENTERPRISES, INC. AND SHALL
NOTED BE USED WITHOUT WRITTEN CONSENT.

STEEL FAB
ENTERPRISES, LLC
MISCELLANEOUS METALS FABRICATOR AND ERECTORS
623 BAUMGARDNER ROAD, LANCASTER, PA 17603
TEL. (717)464-0330 FAX (717)464-9464
WWW.STEELFABENTERPRISES.COM

AISC CERTIFIED FABRICATOR AND ERECTOR

PROJECT OWNER : CK CAPITAL, LLC

PROJECT DESCRIPTION : CLEVELAND BROTHERS-MILESBURG

PROJECT ADDRESS : 1025N. EAGLE VALLEY ROAD, HOWARD, PA 16841

CONTRACTOR : KINSLEY CONSTRUCTION, INC.

DRAWN BY : BAS	DATE : 05-20-25	PROJ. NO. : 25012	REV # A
CHECKED BY : SRP	DATE : 05-20-25	DWG NO. : SE220	

DWG DESCRIPTION : SECTIONS