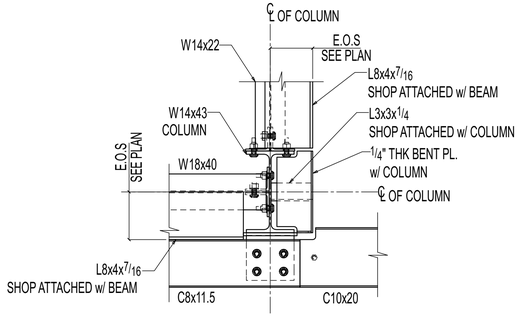

1 SE221 **DETAIL**

(OTHERS NOT SHOWN FOR CLARITY)

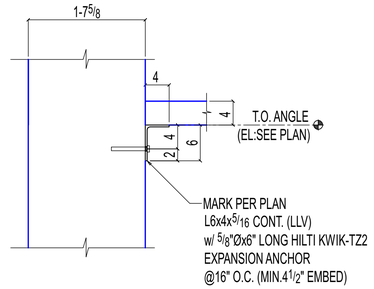

2 SE221 **SECTION**

(REF: 6/S500)

OTHERS NOT SHOWN FOR CLARITY

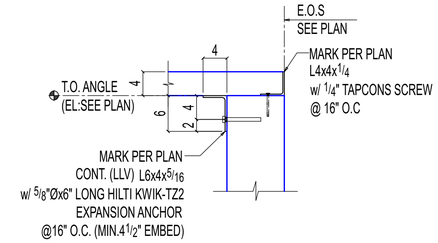

3 SE221 **SECTION**

(REF: 5/S501)

OTHERS NOT SHOWN FOR CLARITY

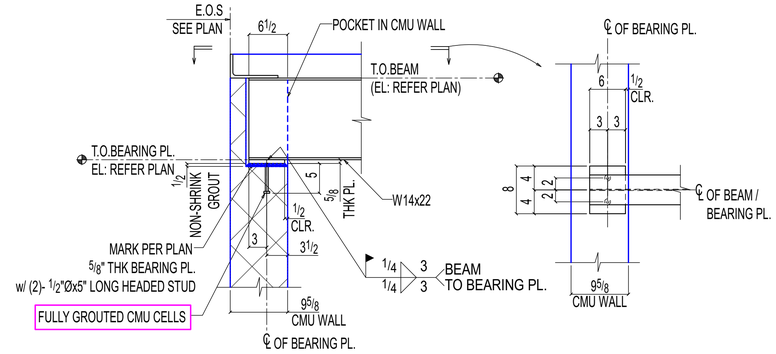

4 SE221 **SECTION**

(REF: 1/S303)

OTHERS NOT SHOWN FOR CLARITY

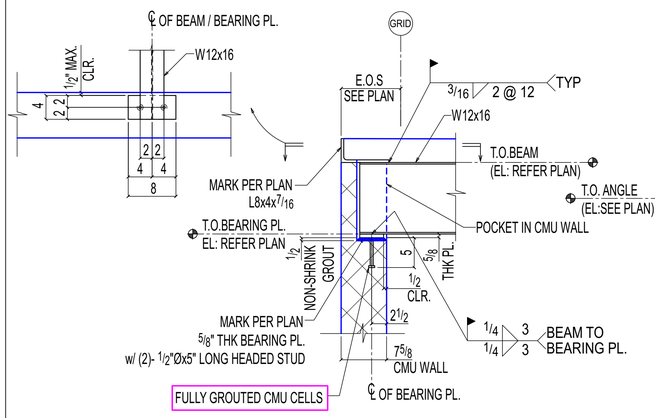

5 SE221 **SECTION**

(REF: 1/S303)

OTHERS NOT SHOWN FOR CLARITY

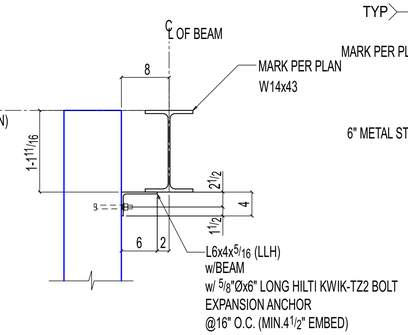

6 SE221 **SECTION**

(REF: 1/S501)

OTHERS NOT SHOWN FOR CLARITY

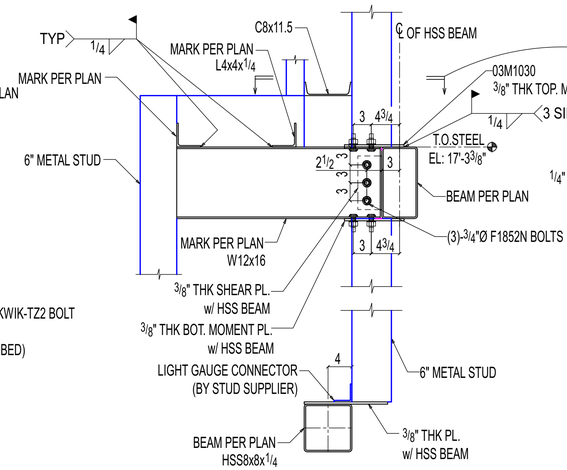

7 SE221 **SECTION**

(REF: 13/S500)

OTHERS NOT SHOWN FOR CLARITY

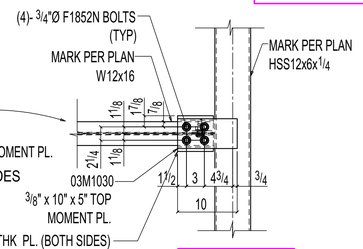

OTHERS NOT SHOWN FOR CLARITY

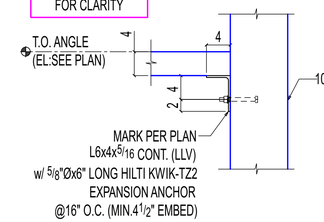

8 SE221 **SECTION**

(REF: 1/S501)

OTHERS NOT SHOWN FOR CLARITY

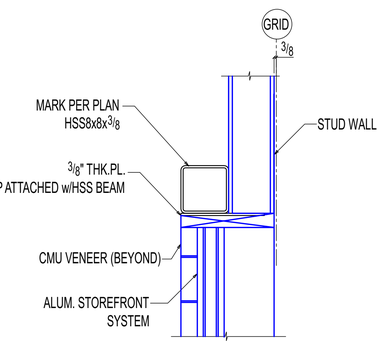

9 SE221 **SECTION**

(REF: 3/A421)

OTHERS NOT SHOWN FOR CLARITY

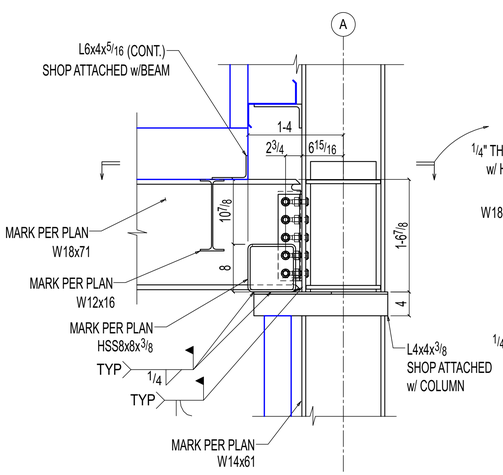

10 SE221 **SECTION**

(REF: 1/S500)

OTHERS NOT SHOWN FOR CLARITY

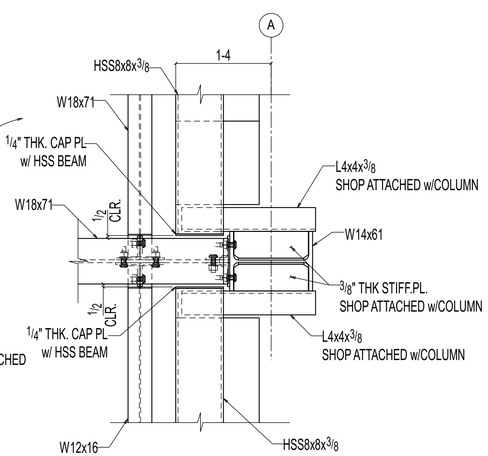

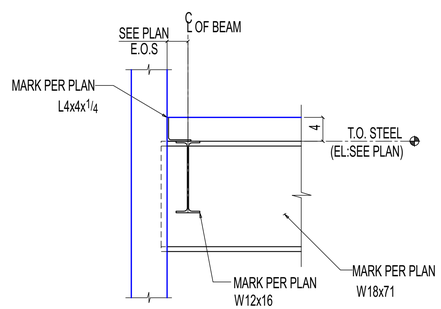

11 SE221 **SECTION**

OTHERS NOT SHOWN FOR CLARITY

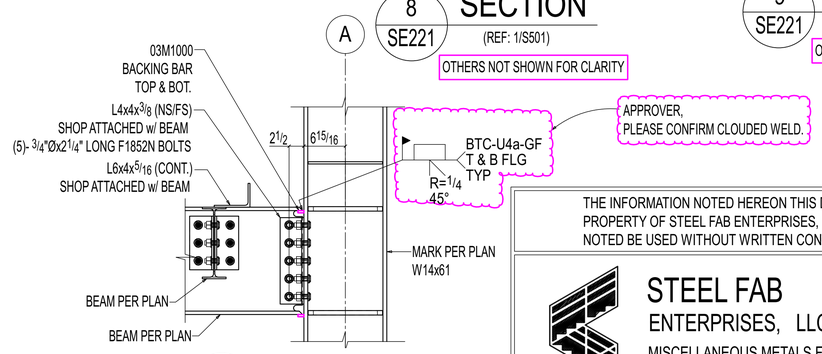

12 SE221 **SECTION**

(REF: 1/S500)

OTHERS NOT SHOWN FOR CLARITY

REVISIONS

REV#	DWN BY	DESCRIPTION	DATE
A	SRP	ISSUED FOR APPROVAL	Jun 11 2025

THE INFORMATION NOTED HEREON THIS DRAWING IS THE PROPERTY OF STEEL FAB ENTERPRISES, INC. AND SHALL NOT BE USED WITHOUT WRITTEN CONSENT.

STEEL FAB
ENTERPRISES, LLC
MISCELLANEOUS METALS FABRICATOR AND ERECTORS
623 BAUMGARDNER ROAD, LANCASTER, PA 17603
TEL. (717)464-0330 FAX (717)464-9464
WWW.STEELFABENTERPRISES.COM

AISC CERTIFIED FABRICATOR AND ERECTOR

PROJECT OWNER : CK CAPITAL, LLC

PROJECT DESCRIPTION : CLEVELAND BROTHERS-MILESBURG

PROJECT ADDRESS : 1025N. EAGLE VALLEY ROAD, HOWARD, PA 16841

CONTRACTOR : KINSLEY CONSTRUCTION, INC.

DRAWN BY : BAS	DATE : 05-20-25	PROJ. NO. : 25012	REV # A
CHECKED BY : SRP	DATE : 05-20-25	DWG NO. : SE221	

DWG DESCRIPTION : SECTION & DETAILS