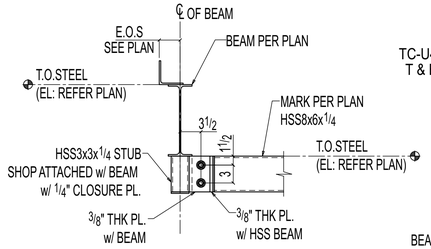

1 SECTION
SE222 (REF: 1/A410)

OTHERS NOT SHOWN FOR CLARITY

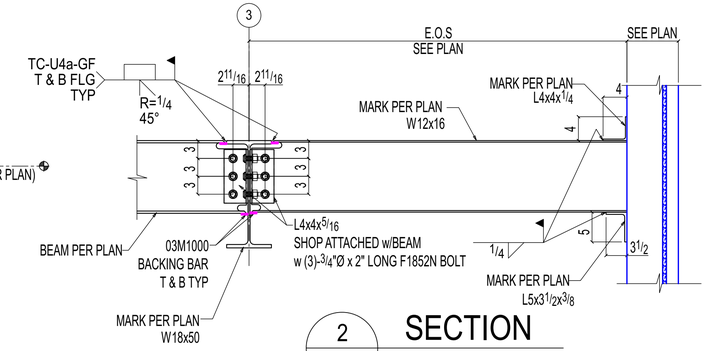

2 SECTION
SE222 (REF: 17/S500)

OTHERS NOT SHOWN FOR CLARITY

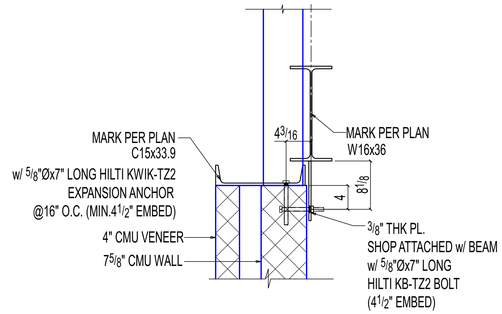

3 SECTION
SE222 (REF: 5/S500)

OTHERS NOT SHOWN FOR CLARITY

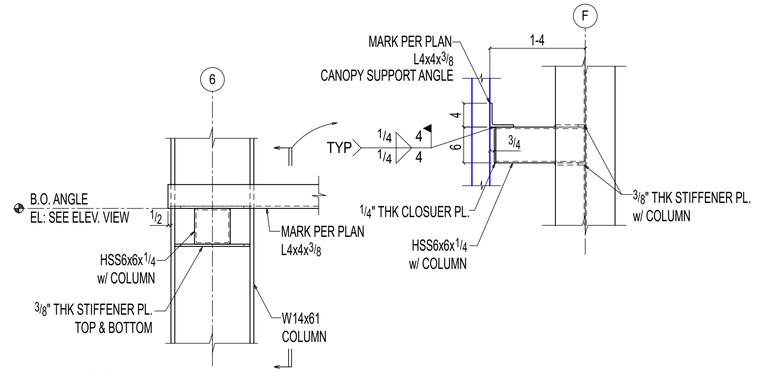

4 DETAIL
SE222 (REF: 19/S501)

OTHERS NOT SHOWN FOR CLARITY

APPROVER,
PLEASE CONFIRM THE CLOUDED HSS POST BOTTOM CONNECTION.
WE HAVE PLACED BOTH BOLTS ON ONE SIDE, AS PLACING THEM
ON BOTH SIDES WOULD CAUSE THE BASE PLATE TO INTERFERE
WITH THE COLUMN. PLEASE CONFIRM IF THIS ARRANGEMENT IS ACCEPTABLE.

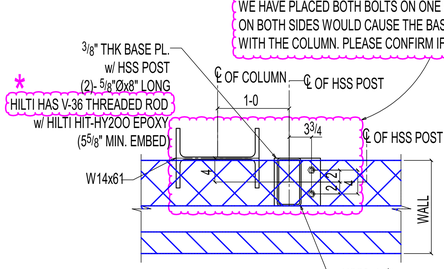

* - APPROVER,
PLEASE CONFIRM COLUDED
ANCHOR IS ACCEPTABLE.

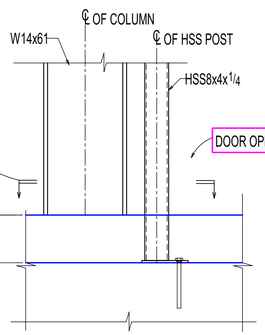

5 DETAIL
SE222 (REF: 10/S304)

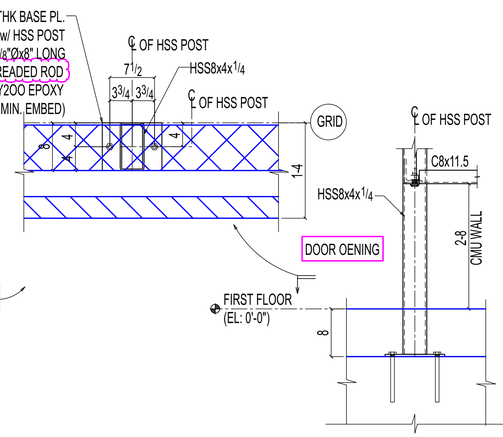

6 DETAIL
SE222 (REF: 10/S304)

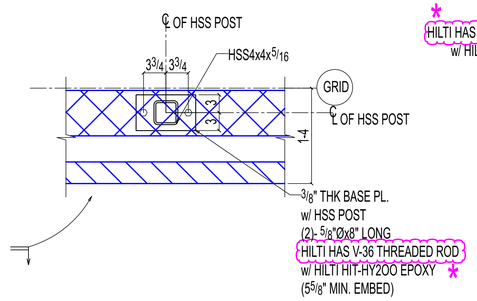

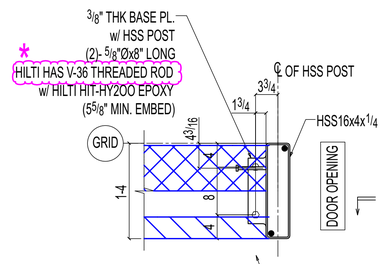

APPROVER,
PLEASE CONFIRM CLOUDED STUD LOCATION.

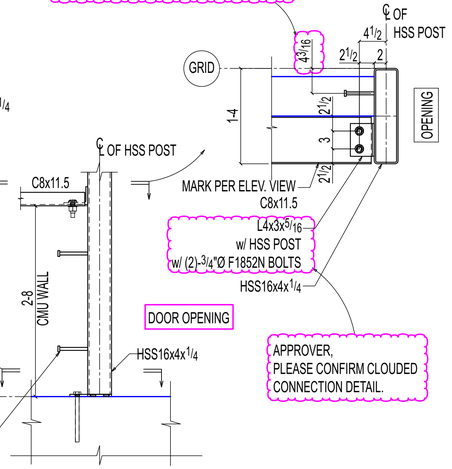

APPROVER,
PLEASE CONFIRM CLOUDED
CONNECTION DETAIL.

APPROVER
STRUCTURAL DRAWING SHOWS HEADED STUD AT
COLUMN FACE FOR CONNECTING INTO THE WALL BUT
ARCH DRAWING SHOWS GRIP STAY ANCHOR FOR THE SAME.
WE ARE PROCEEDING WITH HEADED STUD.
PLEASE CONFIRM.

7 DETAIL
SE222 (REF: 9/S304)

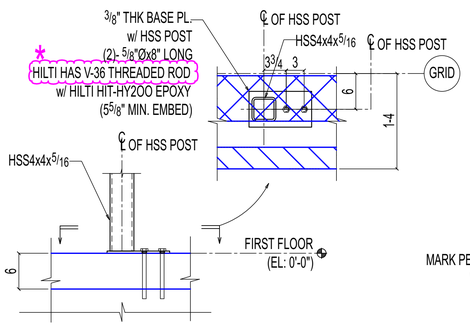

8 DETAIL
SE222 (REF: 9/S304 SIM)

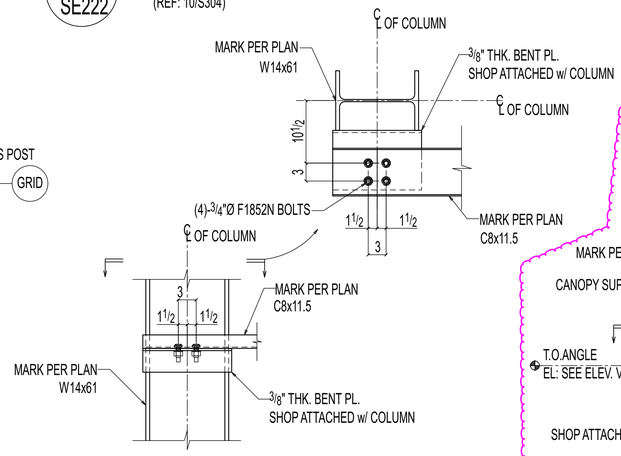

9 DETAIL
SE222 (REF: 1/S304)

OTHERS NOT SHOWN FOR CLARITY

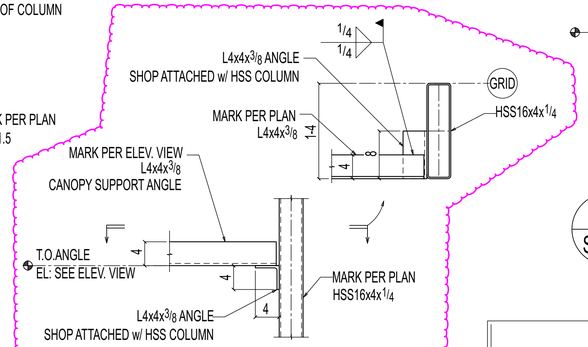

10 DETAIL
SE222 (REF: 19/S501) (SIM)

(OTHERS NOT SHOWN FOR CLARITY)

APPROVER,
PLEASE CONFIRM CLOUDED PRE
MANUFACTURED CANOPY SUPPORT
ANGLE CONNECTION AND WELD DETAIL.

APPROVER,
PLEASE CONFIRM COLUDED
ANCHOR LOCATION.

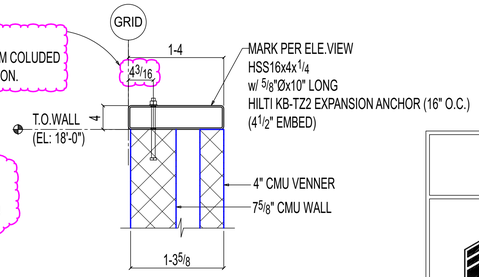

11 SECTION
SE222 (REF: 15/S500)

OTHERS NOT SHOWN FOR CLARITY

REVISIONS

REV#	DWN BY	DESCRIPTION	DATE
A	SRP	ISSUED FOR APPROVAL	Jun 11 2025

THE INFORMATION NOTED HEREON THIS DRAWING IS THE
PROPERTY OF STEEL FAB ENTERPRISES, INC. AND SHALL
NOTED BE USED WITHOUT WRITTEN CONSENT.

STEEL FAB
ENTERPRISES, LLC
MISCELLANEOUS METALS FABRICATOR AND ERECTORS
623 BAUMGARDNER ROAD, LANCASTER, PA 17603
TEL. (717)464-0330 FAX (717)464-9464
WWW.STEELFABENTERPRISES.COM

AISC CERTIFIED FABRICATOR AND ERECTOR

PROJECT OWNER : CK CAPITAL, LLC
PROJECT DESCRIPTION : CLEVELAND BROTHERS-MILESBURG
PROJECT ADDRESS : 1025N. EAGLE VALLEY ROAD, HOWARD, PA 16841
CONTRACTOR : KINSLEY CONSTRUCTION, INC.

DRAWN BY : BAS	DATE : 05-20-25	PROJ. NO. : 25012	REV # A
CHECKED BY : SRP	DATE : 05-20-25	DWG NO. : SE222	

DWG DESCRIPTION : SECTION & DETAILS