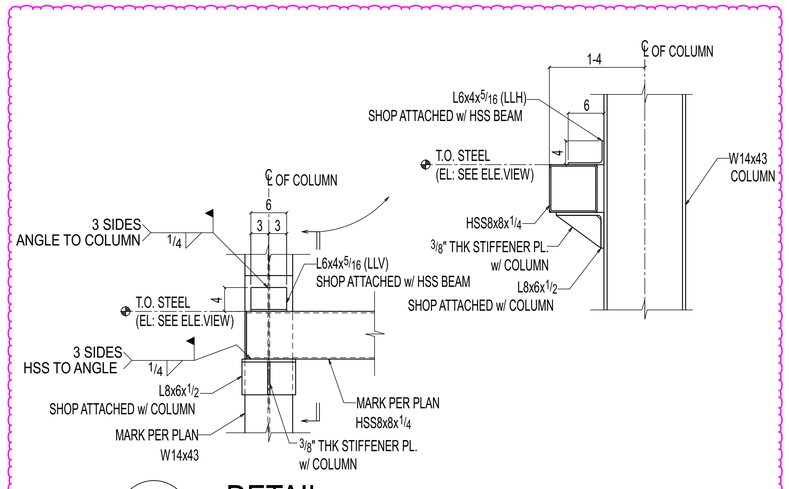

1 SE223 **DETAIL**

OTHERS NOT SHOWN FOR CLARITY

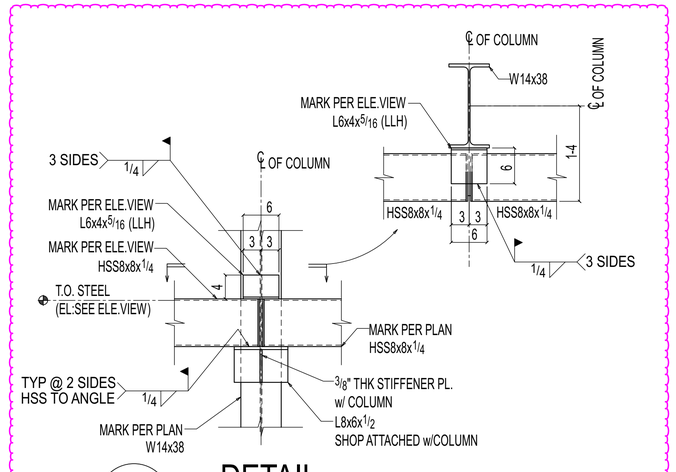

2 SE223 **DETAIL**

(OTHERS NOT SHOWN FOR CLARITY)

APPROVER
PLEASE CONFIRM CLOUDED HSS BEAM TO COLUMN CONNECTION DETAIL.

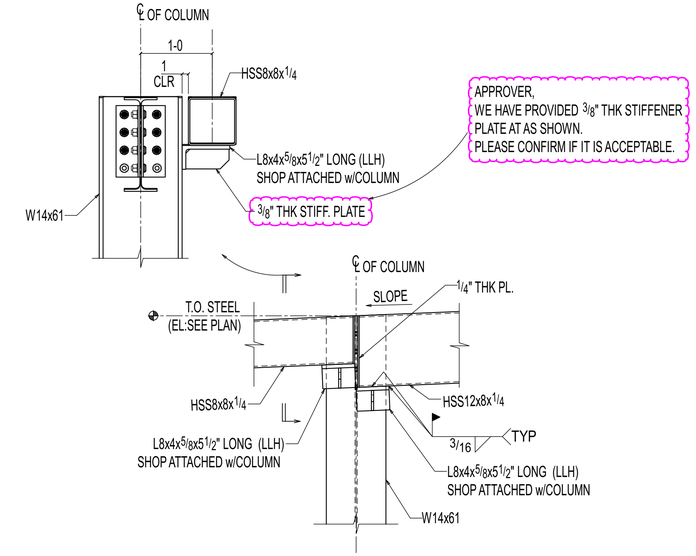

3 SE223 **DETAIL**

(OTHERS NOT SHOWN FOR CLARITY)

APPROVER,
PLEASE CONFIRM CLOUDED ANCHOR
DETAILS ARE OK TO PROCEED?.

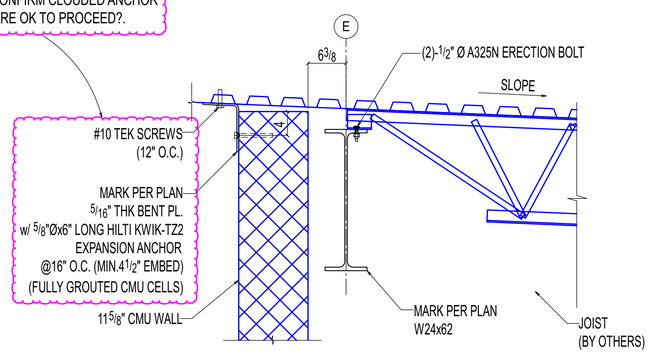

4 SE223 **SECTION**

(REF: 16/S501)

(OTHERS NOT SHOWN FOR CLARITY)

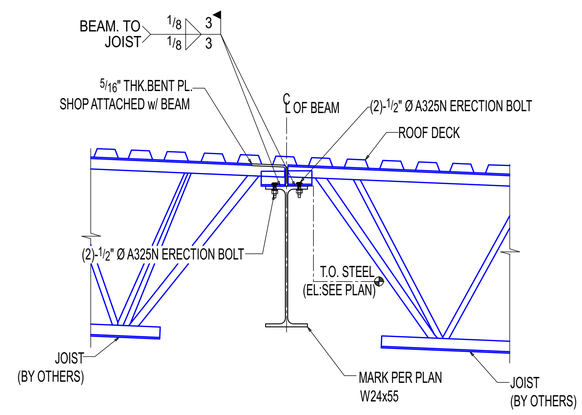

5 SE223 **SECTION**

(REF: 18/S501)

(OTHERS NOT SHOWN FOR CLARITY)

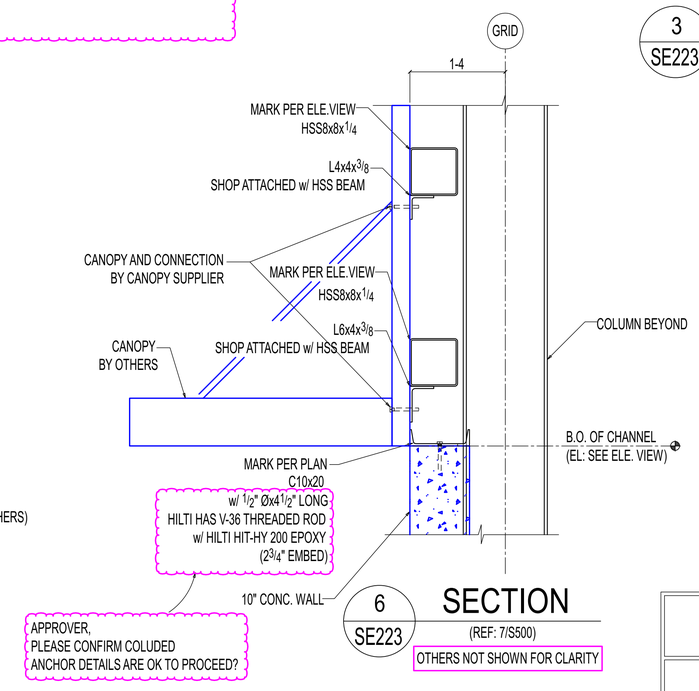

6 SE223 **SECTION**

(REF: 7/S500)

OTHERS NOT SHOWN FOR CLARITY

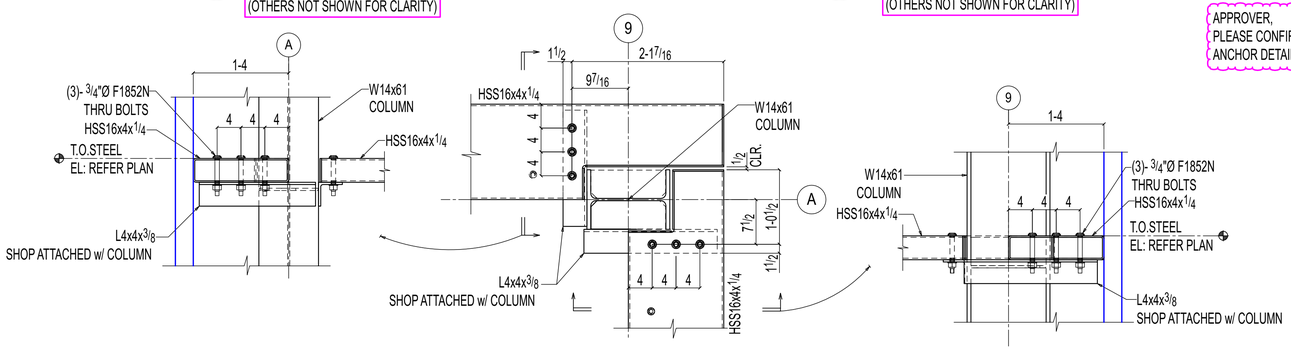

7 SE223 **DETAIL**

(REF: 1/S304)

OTHERS NOT SHOWN FOR CLARITY

REVISIONS

REV#	DWN BY	DESCRIPTION	DATE
A	SRP	ISSUED FOR APPROVAL	Jun 11 2025

THE INFORMATION NOTED HEREON THIS DRAWING IS THE PROPERTY OF STEEL FAB ENTERPRISES, INC. AND SHALL NOTED BE USED WITHOUT WRITTEN CONSENT.

STEEL FAB
ENTERPRISES, LLC
AISC CERTIFIED FABRICATOR AND ERECTOR
MISCELLANEOUS METALS FABRICATOR AND ERECTORS
623 BAUMGARDNER ROAD, LANCASTER, PA 17603
TEL. (717)464-0330 FAX (717)464-9464
WWW.STEELFABENTERPRISES.COM

PROJECT OWNER : CK CAPITAL, LLC

PROJECT DESCRIPTION : CLEVELAND BROTHERS-MILESBURG

PROJECT ADDRESS : 1025N. EAGLE VALLEY ROAD, HOWARD, PA 16841

CONTRACTOR : KINSLEY CONSTRUCTION, INC.

DRAWN BY : BAS	DATE : 05-20-25	PROJ. NO. : 25012	REV # A
CHECKED BY : SRP	DATE : 05-20-25	DWG NO. : SE223	

DWG DESCRIPTION : SECTIONS