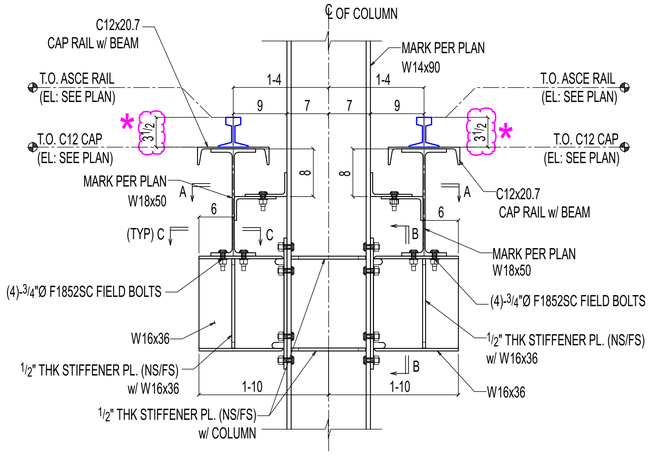

1 SE224 **SECTION**

REF: 4/S103 (SIM.)

OTHERS NOT SHOWN FOR CLARITY

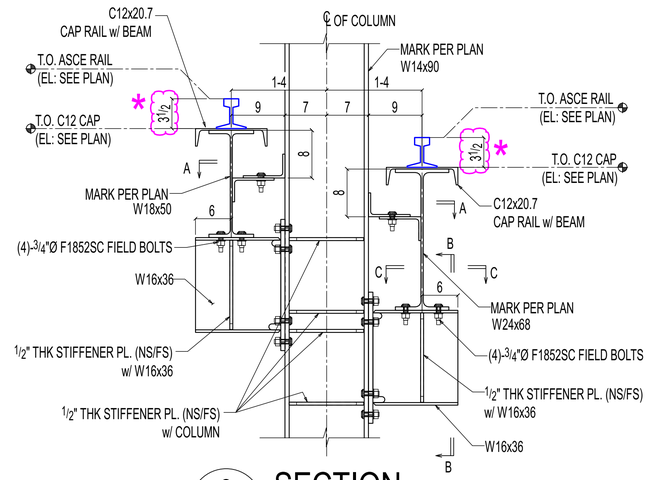

2 SE224 **SECTION**

(REF: 4/S103)

OTHERS NOT SHOWN FOR CLARITY

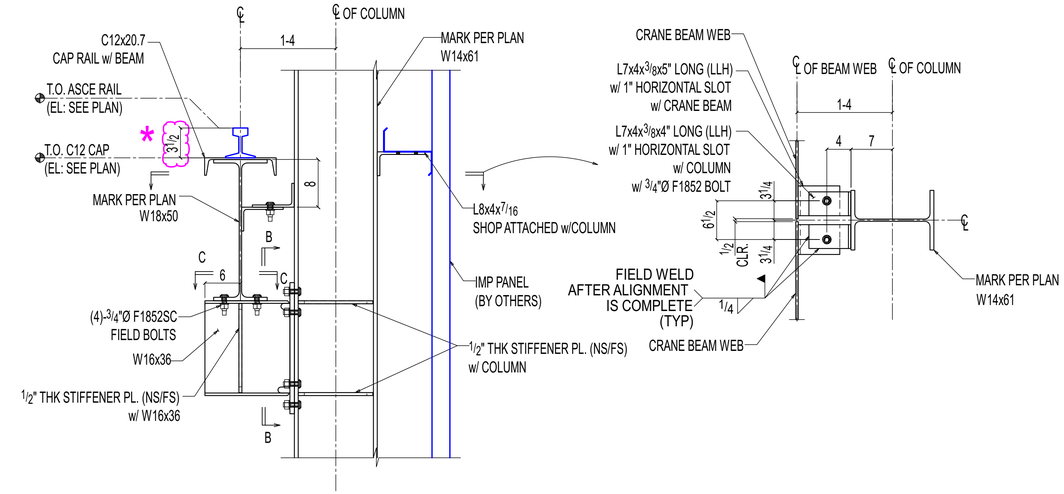

3 SE224 **SECTION**

(REF: 5/S103)

OTHERS NOT SHOWN FOR CLARITY

*-APPROVER,
PLEASE CONFIRM ALL CLOUDED ASCE CRANE RAIL DEPTH ARE OK TO PROCEED?

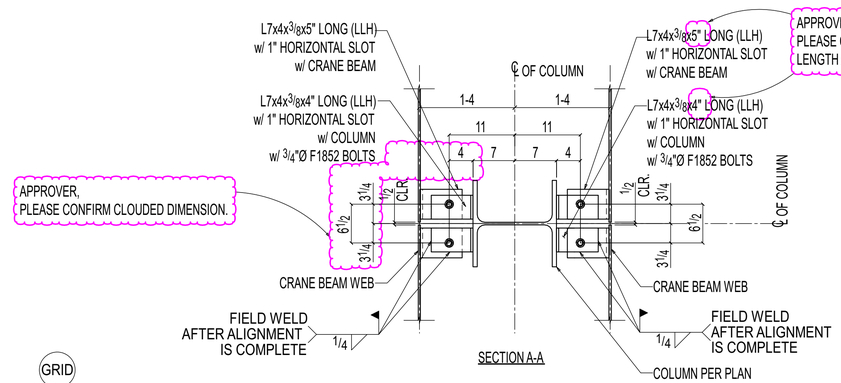

SECTION A-A

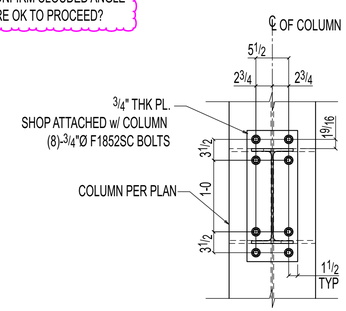

SECTION B-B

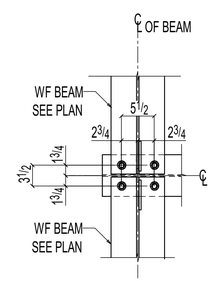

SECTION C-C

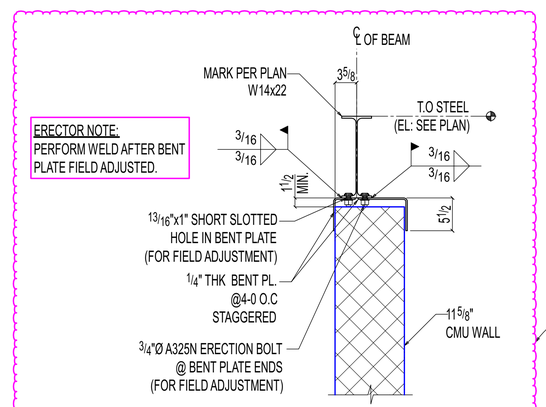

ERECTOR NOTE:
PERFORM WELD AFTER BENT PLATE FIELD ADJUSTED.

5 SE224 **SECTION**

(OTHERS NOT SHOWN FOR CLARITY)

APPROVER
PLEASE CONFIRM CLOUDED WALL BRACING DETAIL AT ROOF.
WE HAVE FOLLWED DETAILS SIMILAR TO 1/S302 WITHOUT KICKER.

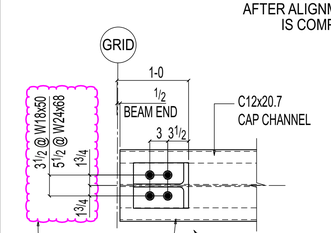

APPROVER,
PLEASE CONFIRM CLOUDED DIMENSION.

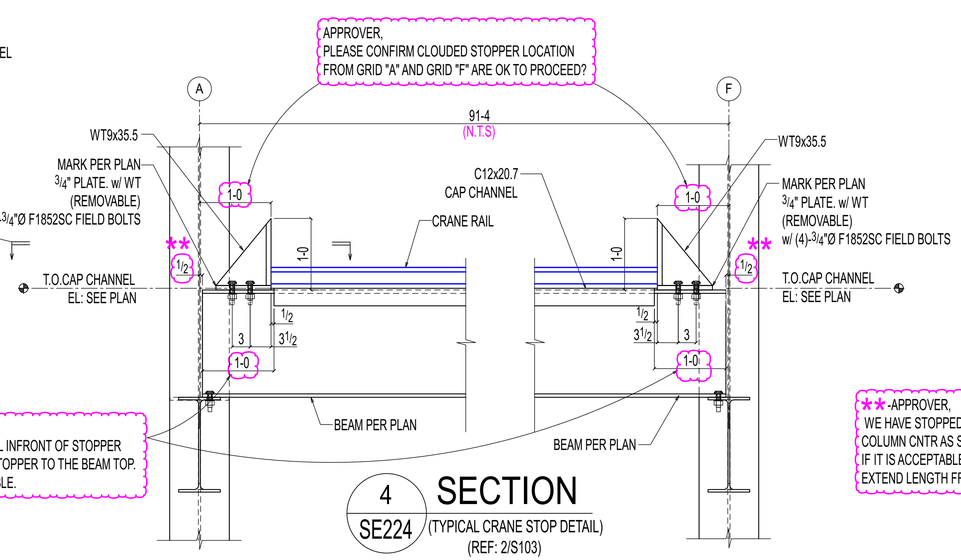

APPROVER,
WE HAVE STOPPED CAP CHANNEL INFRONT OF STOPPER
AS SHOWN AND CONNECT THE STOPPER TO THE BEAM TOP.
PLEASE CONFIRM IT IS ACCEPTABLE.

4 SE224 **SECTION**

(TYPICAL CRANE STOP DETAIL)

(REF: 2/S103)

OTHER NOT SHOWN FOR CLARITY

**-APPROVER,
WE HAVE STOPPED CRANE BEAM 1/2" FROM
COLUMN CNTR AS SHOWN. PLEASE CONFIRM
IF IT IS ACCEPTABLE OR ELSE PROVIDE BEAM
EXTEND LENGTH FROM COLUMN CNTR.

REVISIONS

REV#	DWN BY	DESCRIPTION	DATE
A	SRP	ISSUED FOR APPROVAL	Jun 11 2025

THE INFORMATION NOTED HEREON THIS DRAWING IS THE PROPERTY OF STEEL FAB ENTERPRISES, INC. AND SHALL NOTED BE USED WITHOUT WRITTEN CONSENT.

STEEL FAB
ENTERPRISES, LLC
MISCELLANEOUS METALS FABRICATOR AND ERECTORS
623 BAUMGARDNER ROAD, LANCASTER, PA 17603
TEL. (717)464-0330 FAX (717)464-9464
WWW.STEELFABENTERPRISES.COM

AISC CERTIFIED FABRICATOR AND ERECTOR

PROJECT OWNER : CK CAPITAL, LLC

PROJECT DESCRIPTION : CLEVELAND BROTHERS-MILESBURG

PROJECT ADDRESS : 1025N. EAGLE VALLEY ROAD, HOWARD, PA 16841

CONTRACTOR : KINSLEY CONSTRUCTION, INC.

DRAWN BY : BAS	DATE : 05-20-25	PROJ. NO. : 25012	REV # A
CHECKED BY : SRP	DATE : 05-20-25	DWG NO. : SE224	

DWG DESCRIPTION : SECTIONS