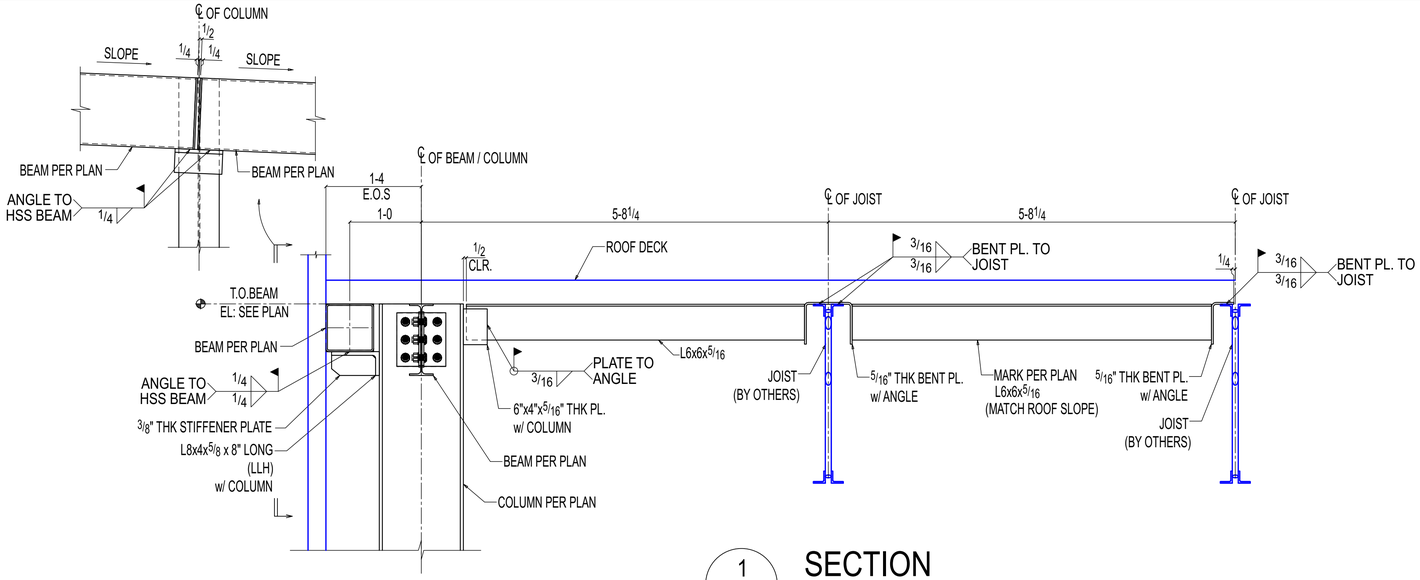

1 SE225 SECTION

(REF: 11/S501)

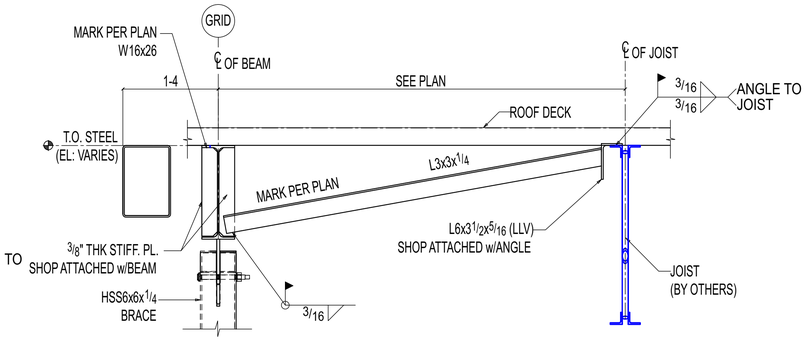

2 SE225 SECTION

(OTHERS NOT SHOWN FOR CLARITY)

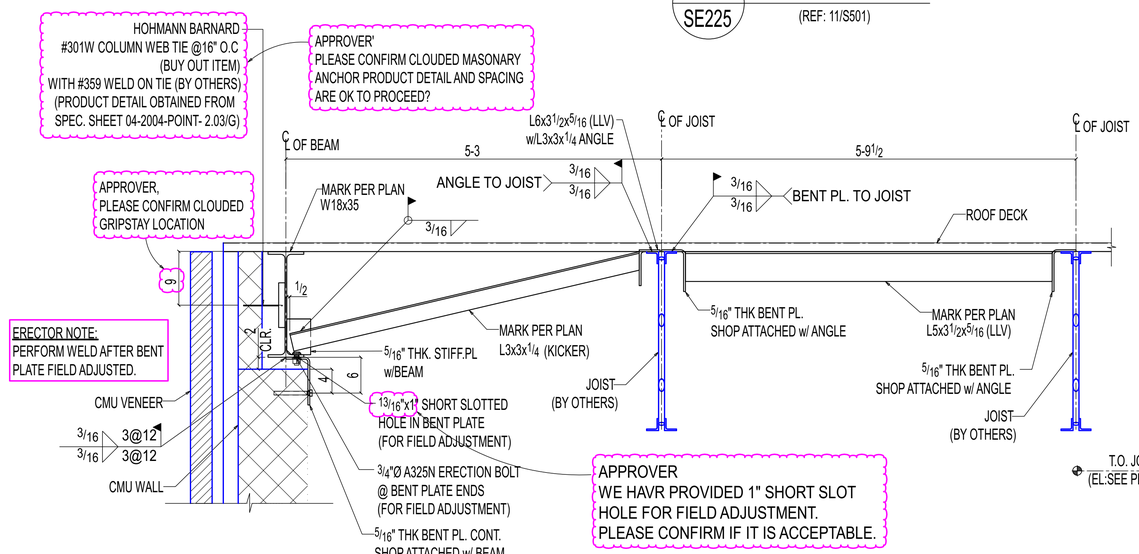

3 SE225 SECTION

(REF: 13/S501)

(OTHERS NOT SHOWN FOR CLARITY)

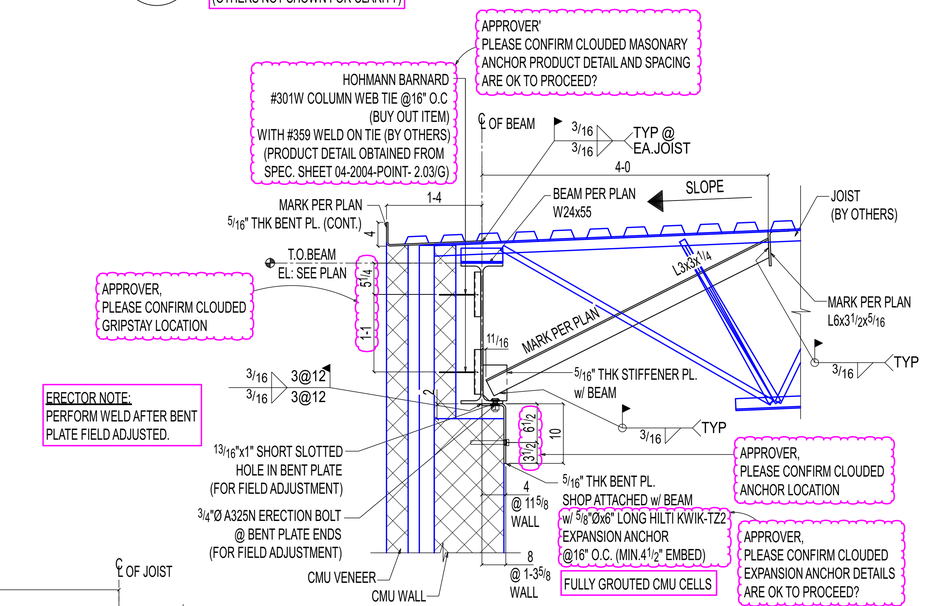

5 SE225 SECTION

(REF: 14/S501)

(OTHERS NOT SHOWN FOR CLARITY)

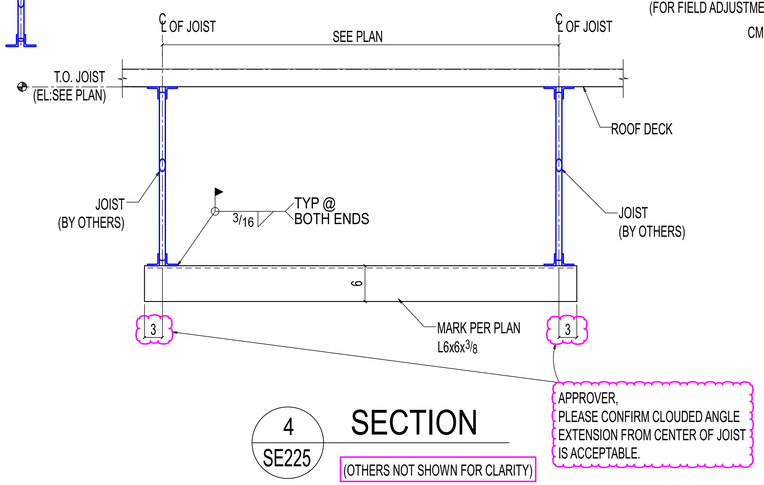

4 SE225 SECTION

(OTHERS NOT SHOWN FOR CLARITY)

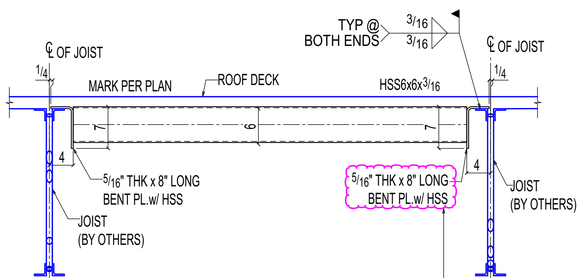

6 SE225 SECTION

REVISIONS

REV#	DWN BY	DESCRIPTION	DATE
A	SRP	ISSUED FOR APPROVAL	Jun 11 2025

THE INFORMATION NOTED HEREON THIS DRAWING IS THE PROPERTY OF STEEL FAB ENTERPRISES, INC. AND SHALL NOT BE USED WITHOUT WRITTEN CONSENT.

STEEL FAB ENTERPRISES, LLC
MISCELLANEOUS METALS FABRICATOR AND ERECTORS
623 BAUMGARDNER ROAD, LANCASTER, PA 17603
TEL. (717)464-0330 FAX (717)464-9464
WWW.STEELFABENTERPRISES.COM

AISC CERTIFIED FABRICATOR AND ERECTOR

PROJECT OWNER : CK CAPITAL, LLC

PROJECT DESCRIPTION : CLEVELAND BROTHERS-MILESBURG

PROJECT ADDRESS : 1025N. EAGLE VALLEY ROAD, HOWARD, PA 16841

CONTRACTOR : KINSLEY CONSTRUCTION, INC.

DRAWN BY : BAS	DATE : 05-20-25	PROJ. NO. : 25012	REV # A
CHECKED BY : SRP	DATE : 05-20-25	DWG NO. : SE225	

DWG DESCRIPTION : SECTIONS