APPROVER
WE ASSUMED THE BOTTOM OF THE REEL MOUNTING PLATE IS AT 8'-0" FROM FINISHED FLOOR, AS THE STRUCTURAL DRAWING SHOWS 8'-0" BUT DOES NOT SPECIFY THE REFERENCE POINT. PLEASE CONFIRM.

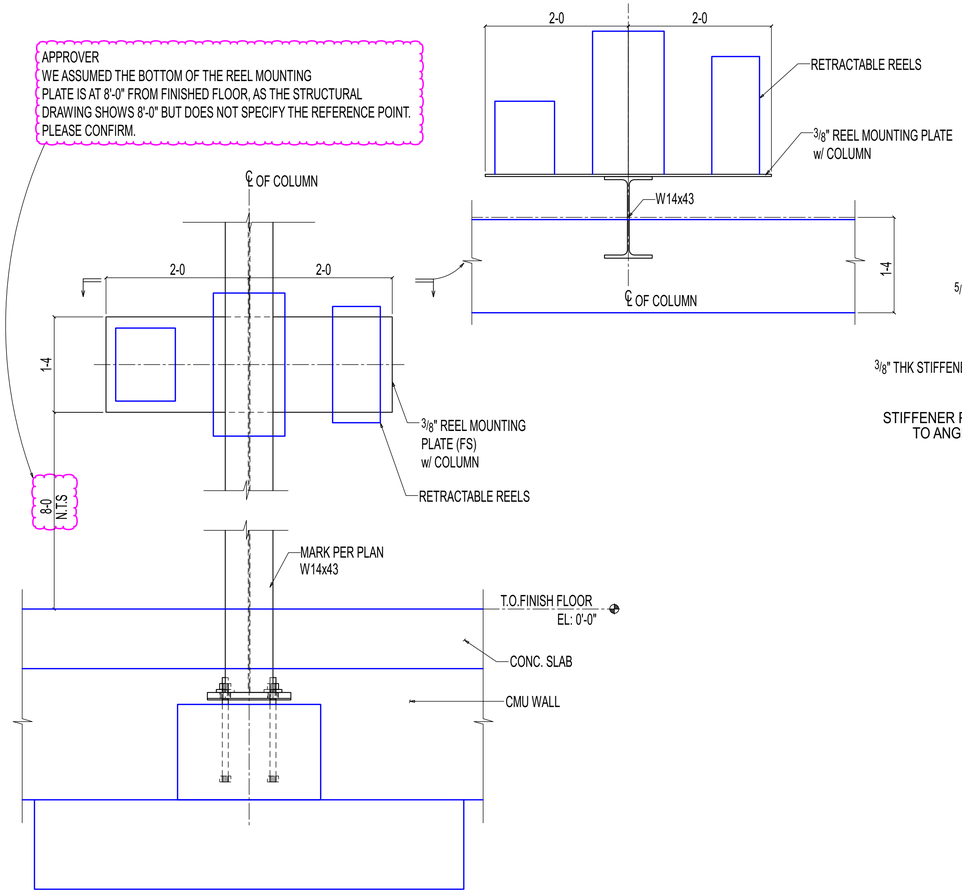

1 SE226 **DETAIL**
(REF: 16/S303)
OTHERS NOT SHOWN FOR CLARITY

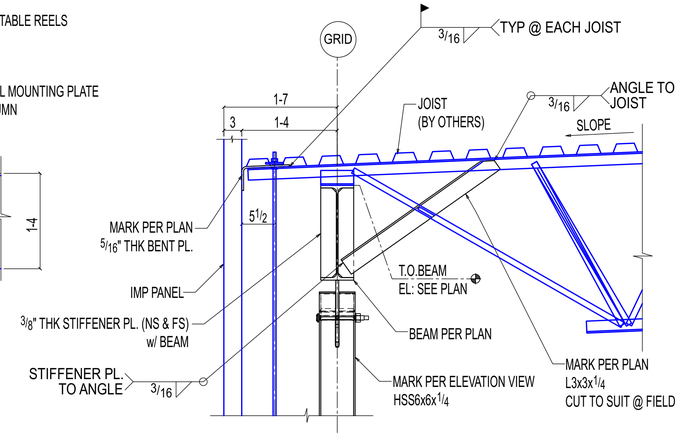

2 SE226 **SECTION**
REF: 14/S501 (SIM)
(OTHERS NOT SHOWN FOR CLARITY)

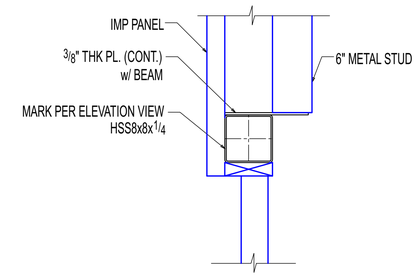

3 SE226 **SECTION**
(REF: 12/S500)
OTHERS NOT SHOWN FOR CLARITY

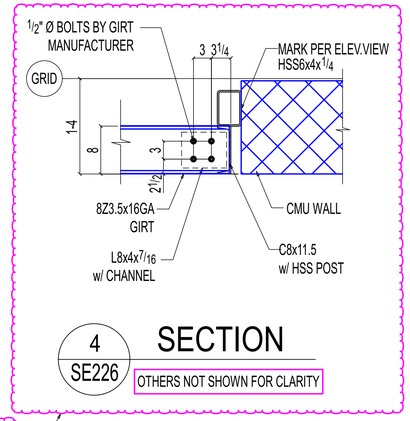

4 SE226 **SECTION**
OTHERS NOT SHOWN FOR CLARITY

APPROVER,
PLEASE CONFIRM CLOUDED CONNECTION DETAIL FOR VERTICAL CHANNEL TO GIRT IS OK TO PROCEED?

APPROVER,
PLEASE CONFIRM CLOUDE CHANNEL LOCATION IS OK TO PROCEED?

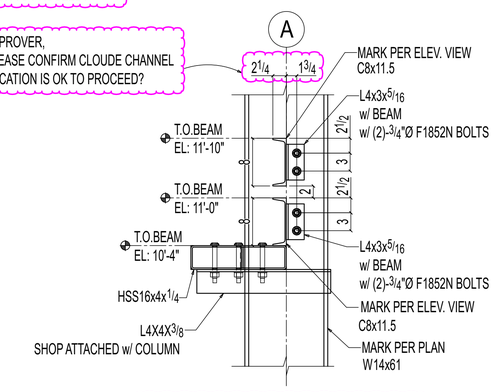

8 SE226 **SECTION**
OTHERS NOT SHOWN FOR CLARITY

APPROVER,
PLEASE CONFIRM CLOUDED CONNECTION DETAIL.

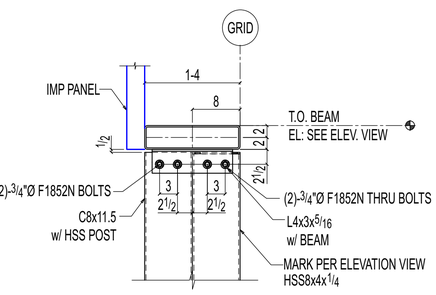

7 SE226 **SECTION**
(REF: 7/S304)
(OTHERS NOT SHOWN FOR CLARITY)

APPROVER
WE HAVE PROVIDED A L4x4 ANGLE AS SHOWN FOR BENT PLATE SUPPORT AT BENT PLATE ENDS WHERE WE DONT HAVE JOIST TO SUPPORT BENT PLATE PER SECTION 14/S501.
PLEASE CONFIRM IF IT IS ACCEPTABLE.

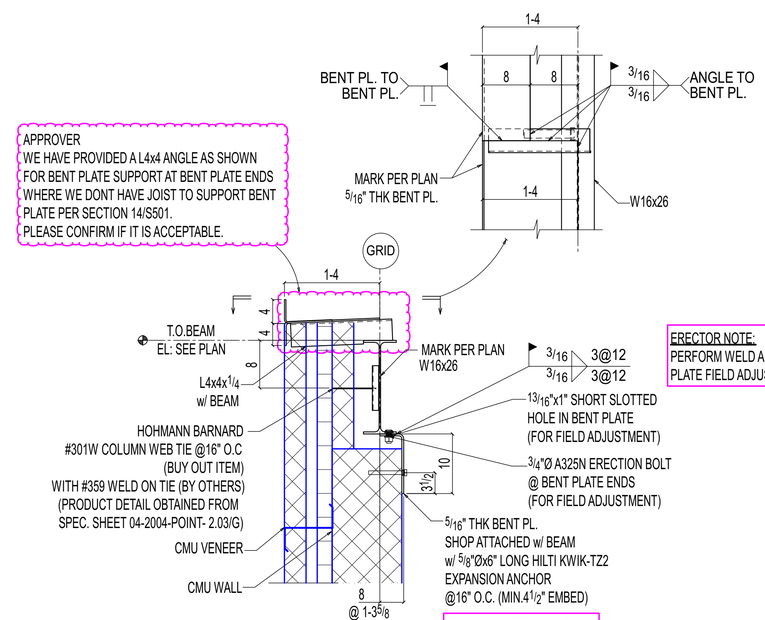

ERECTOR NOTE:
PERFORM WELD AFTER BENT PLATE FIELD ADJUSTED.

6 SE226 **SECTION**
(OTHERS NOT SHOWN FOR CLARITY)

APPROVER,
PLEASE CONFIRM CLOUDED ANGLE SECTION SIZE.

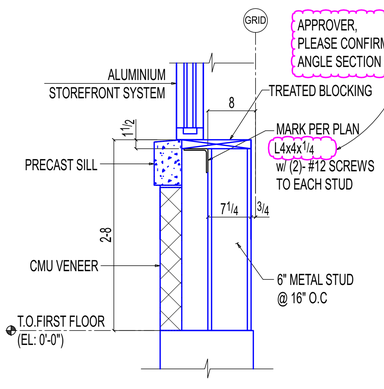

5 SE226 **SECTION**
(REF: 4/S400,3/A421)
(OTHERS NOT SHOWN FOR CLARITY)

REVISIONS

REV#	DWN BY	DESCRIPTION	DATE
A	SRP	ISSUED FOR APPROVAL	Jun 11 2025

THE INFORMATION NOTED HEREON THIS DRAWING IS THE PROPERTY OF STEEL FAB ENTERPRISES, INC. AND SHALL NOT BE USED WITHOUT WRITTEN CONSENT.

STEEL FAB ENTERPRISES, LLC
MISCELLANEOUS METALS FABRICATOR AND ERECTORS
623 BAUMGARDNER ROAD, LANCASTER, PA 17603
TEL. (717)464-0330 FAX (717)464-9464
WWW.STEELFABENTERPRISES.COM

AISC CERTIFIED FABRICATOR AND ERECTOR

PROJECT OWNER : CK CAPITAL, LLC			
PROJECT DESCRIPTION : CLEVELAND BROTHERS-MILESBURG			
PROJECT ADDRESS : 1025N. EAGLE VALLEY ROAD, HOWARD, PA 16841			
CONTRACTOR : KINSLEY CONSTRUCTION, INC.			
DRAWN BY : BAS	DATE : 05-20-25	PROJ. NO. : 25012	REV # A
CHECKED BY : SRP	DATE : 05-20-25	DWG NO. : SE226	
DWG DESCRIPTION : SECTIONS			