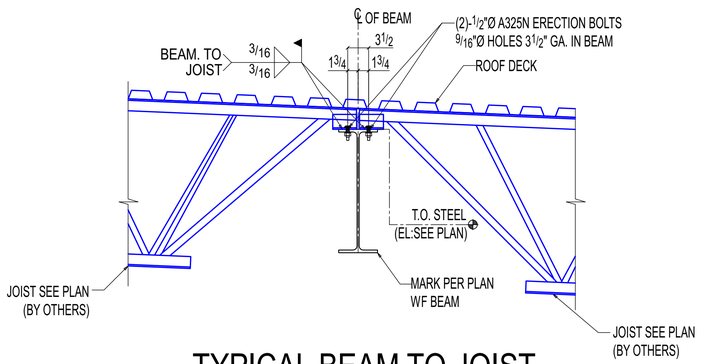

TYPICAL BEAM TO JOIST WELD DETAIL

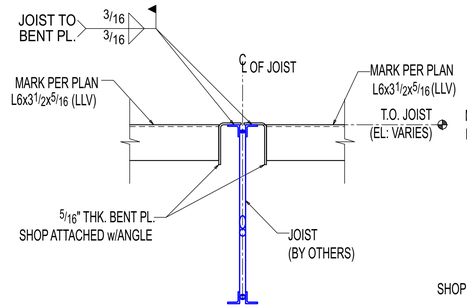

BEARING AT JOIST

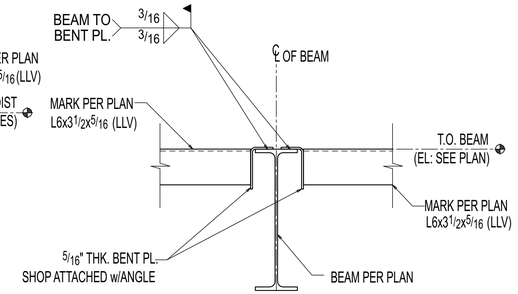

BEARING AT BEAM

TYPICAL WELD DETAIL FOR JOIST TO ANGLE & BEAM TO ANGLE

APPROVER,
WE HAVE ASSUMED ALL DOWNSPOUT PIPES ARE 6"Ø
AND PROVIDED GUARD FOR THE SAME.
PLEASE CONFIRM.

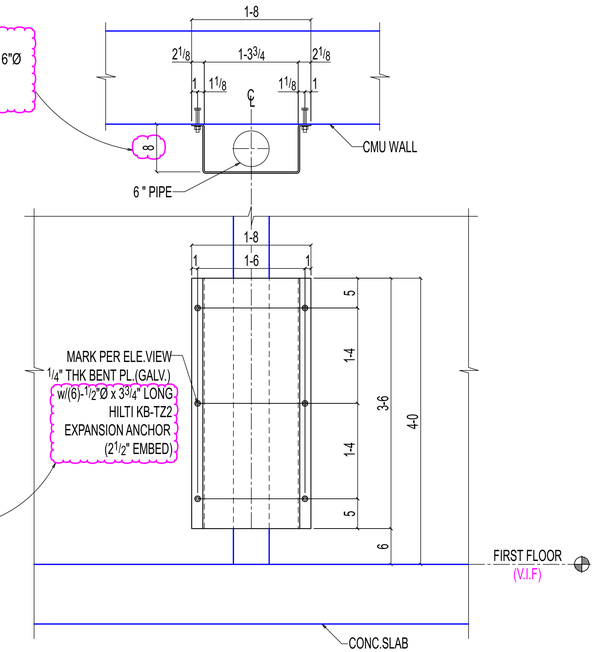

APPROVER,
PLEASE CONFIRM CLOUDED ANCHOR
DETAILS FOR DOWNSPOUT GUARD
CONNECTION.

TYPICAL DOWNSPOUT GUARD DETAIL

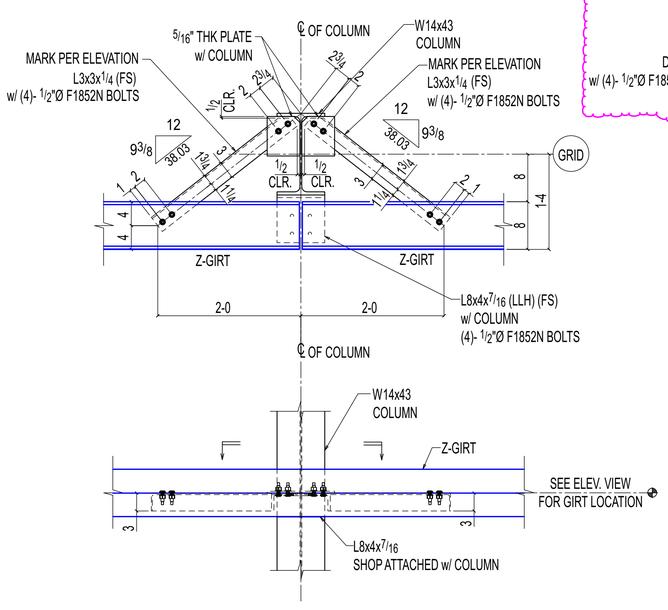

CONDITION FOR F.B.

TYPICAL COLUMN FLANGE BRACE CONNECTION DETAIL

(REF: 5/S304)

OTHERS NOT SHOWN FOR CLARITY

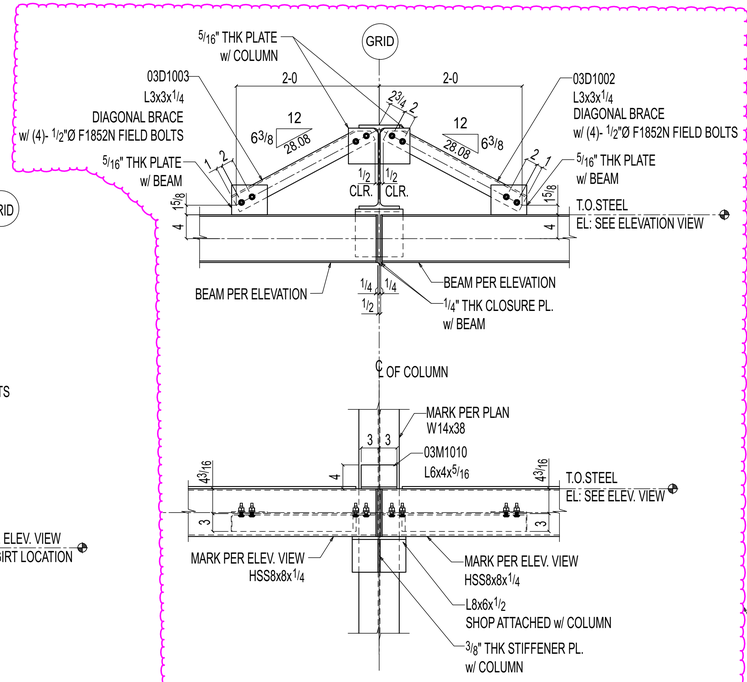

CONDITION FOR F.B.

TYPICAL COLUMN FLANGE BRACE TO HSS BEAM

REF: 5/S304 (SIM)

OTHERS NOT SHOWN FOR CLARITY

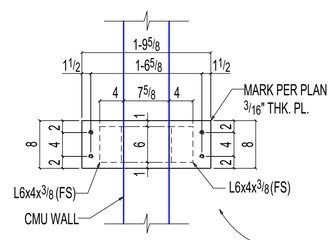

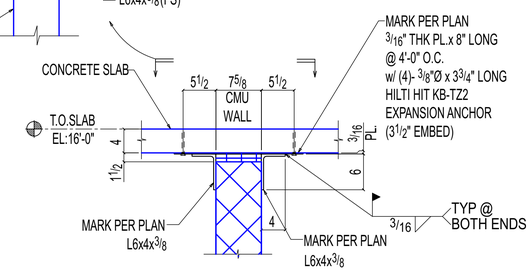

TYPICAL CMU WALL BRACING DETAIL

(REF:2/S302)

(OTHERS NOT SHOWN FOR CLARITY)

APPROVER,
PLEASE CONFIRM THE CLOUDED FLANGE BRACE ARRANGEMENT FOR
HSS BEAM TO COLUMN.STRUCTURAL DRAWING 5/S304 SHOWS THE DETAIL FOR
GIRT-TO-COLUMN CONNECTION,BUT THERE IS NO SECTION DETAIL PROVIDED FOR
HSS BEAM TO COLUMN FLANGE BRACE

REVISIONS

REV#	DWN BY	DESCRIPTION	DATE
A	SRP	ISSUED FOR APPROVAL	Jun 11 2025

THE INFORMATION NOTED HEREON THIS DRAWING IS THE
PROPERTY OF STEEL FAB ENTERPRISES, INC. AND SHALL
NOTED BE USED WITHOUT WRITTEN CONSENT.

STEEL FAB
ENTERPRISES, LLC
MISCELLANEOUS METALS FABRICATOR AND ERECTORS
623 BAUMGARDNER ROAD, LANCASTER, PA 17603
TEL. (717)464-0330 FAX (717)464-9464
WWW.STEELFABENTERPRISES.COM

AISC CERTIFIED FABRICATOR AND ERECTOR

PROJECT OWNER : CK CAPITAL, LLC

PROJECT DESCRIPTION : CLEVELAND BROTHERS-MILESBURG

PROJECT ADDRESS : 1025N. EAGLE VALLEY ROAD, HOWARD, PA 16841

CONTRACTOR : KINSLEY CONSTRUCTION, INC.

DRAWN BY : BAS	DATE : 05-20-25	PROJ. NO. : 25012	REV # A
CHECKED BY : SRP	DATE : 05-20-25	DWG NO. : SE228	

DWG DESCRIPTION : TYPICAL SECTIONS