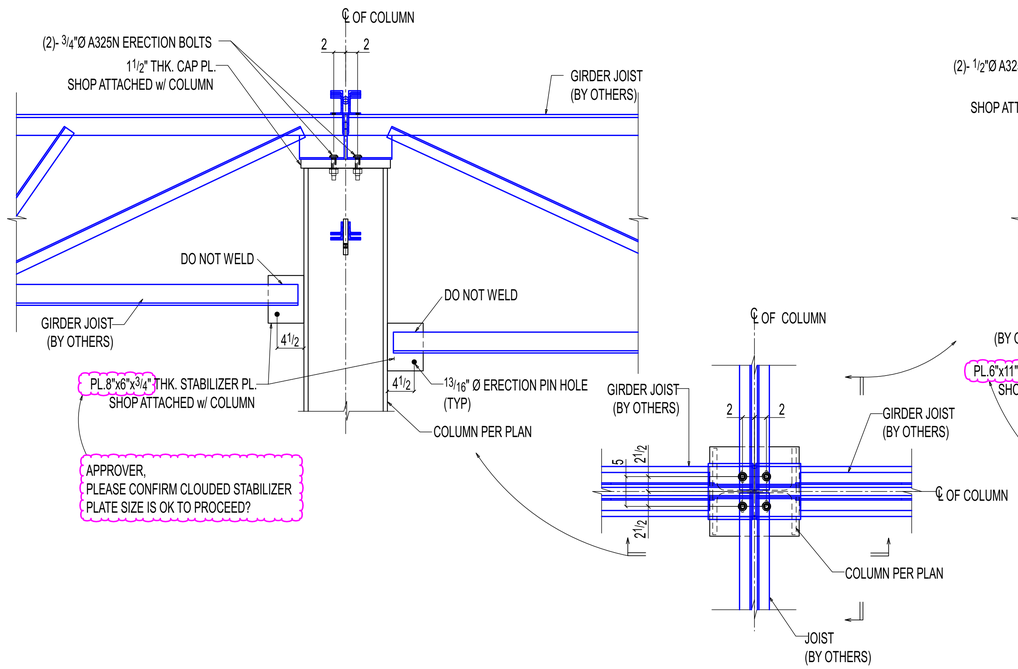

TYPICAL DETAIL FOR WF COLUMN TO JOIST CONNECTION

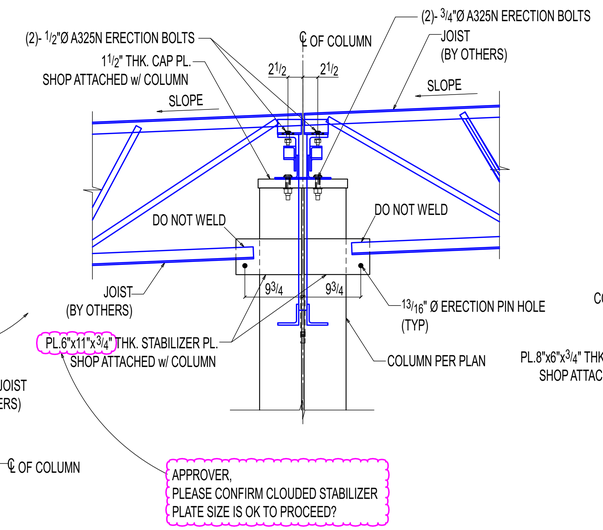

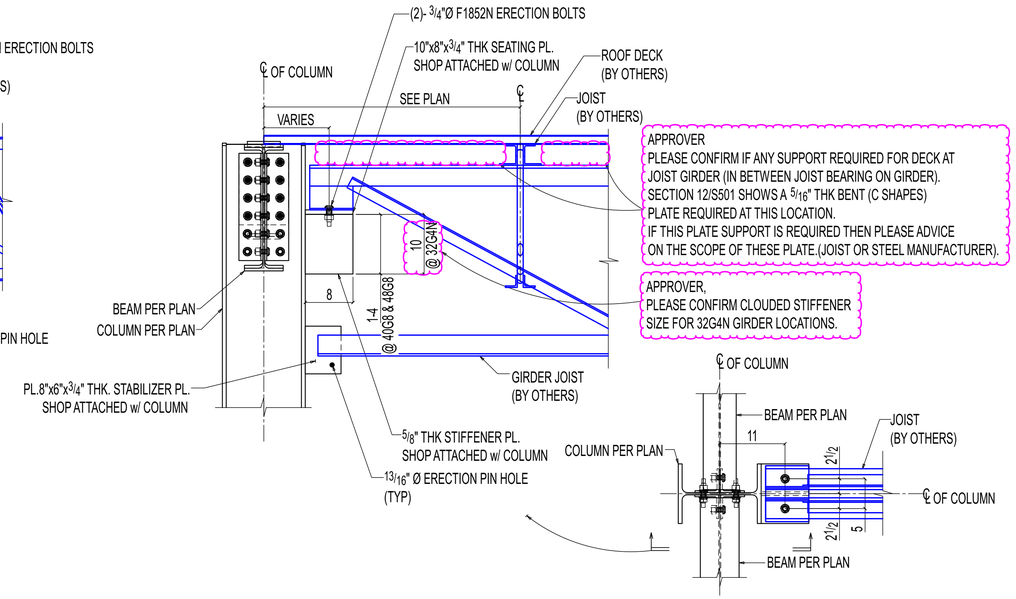

TYPICAL DETAIL FOR WF COLUMN TO JOIST CONNECTION

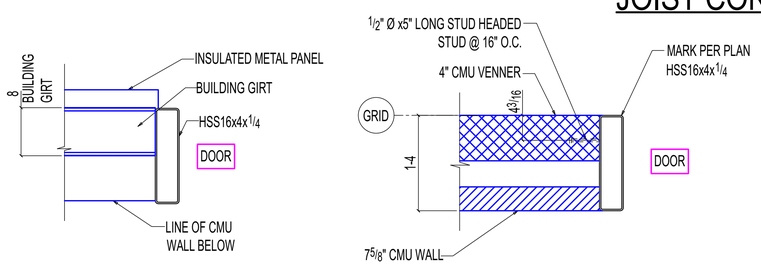

ABOVE BELOW

TYPICAL OVERHEAD GARAGE DOOR @ EXTERIOR MASONRY LOW / METAL PANEL HIGH

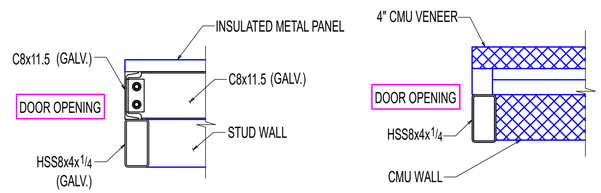

ABOVE BELOW

TYPICAL MAN DOOR @ LOW MASONRY & METAL SIDING

(REF: A515)

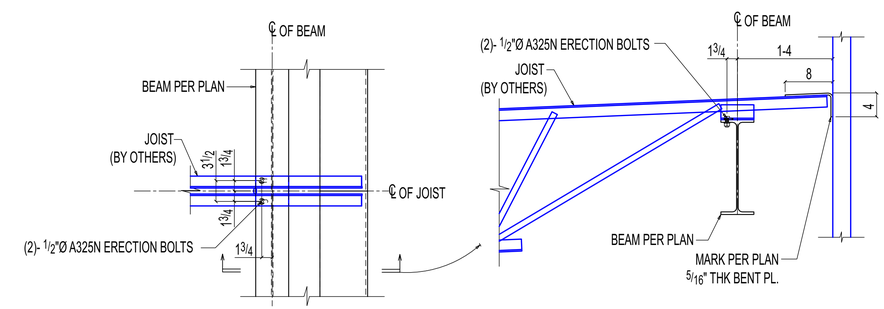

TYPICAL DETAIL FOR EDGE OF SLAB/ JOIST TO WF BEAM CONNECTION

THE INFORMATION NOTED HEREON THIS DRAWING IS THE PROPERTY OF STEEL FAB ENTERPRISES, INC. AND SHALL NOTED BE USED WITHOUT WRITTEN CONSENT.

STEEL FAB
ENTERPRISES, LLC
AISC CERTIFIED FABRICATOR AND ERECTOR
MISCELLANEOUS METALS FABRICATOR AND ERECTORS
623 BAUMGARDNER ROAD, LANCASTER, PA 17603
TEL. (717)464-0330 FAX (717)464-9464
WWW.STEELFABENTERPRISES.COM

PROJECT OWNER : CK CAPITAL, LLC

PROJECT DESCRIPTION : CLEVELAND BROTHERS-MILESBURG

PROJECT ADDRESS : 1025N. EAGLE VALLEY ROAD, HOWARD, PA 16841

CONTRACTOR : KINSLEY CONSTRUCTION, INC.

DRAWN BY : BAS	DATE : 05-20-25	PROJ. NO. : 25012	REV # A
CHECKED BY : SRP	DATE : 05-20-25	DWG NO. : SE230	

DWG DESCRIPTION : TYPICAL SECTIONS

REVISIONS

REV#	DWN BY	DESCRIPTION	DATE
A	SRP	ISSUED FOR APPROVAL	Jun 11 2025