Q1

GC-
Please confirm your preference per yellow clouded note.

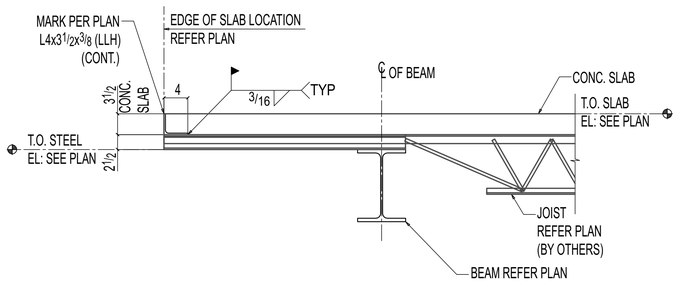

1 E4703 SECTION
(REF: 15/S306)
(OTHERS NOT SHOWN FOR CLARITY)

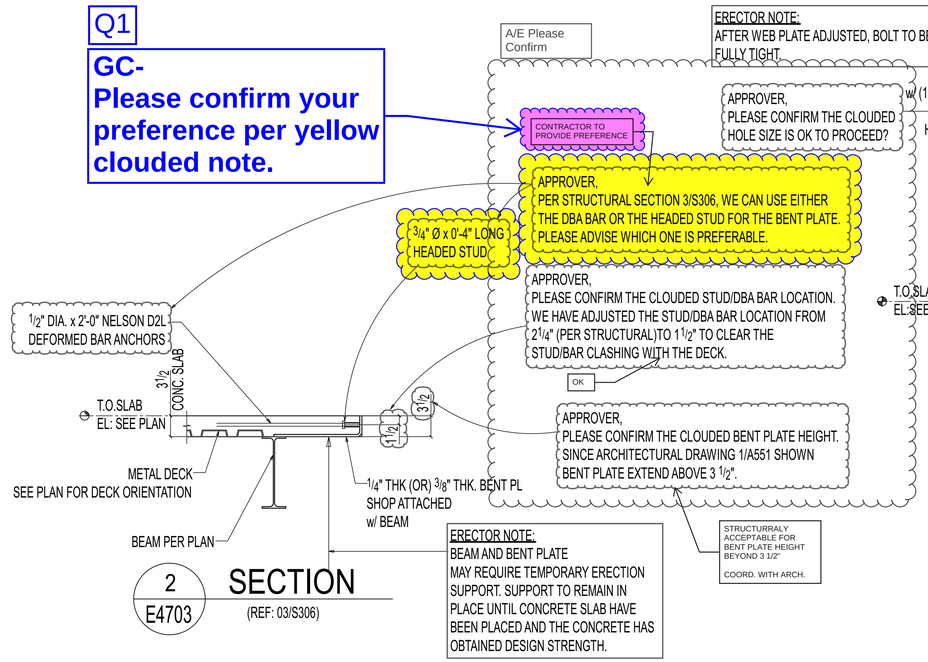

2 E4703 SECTION
(REF: 03/S306)

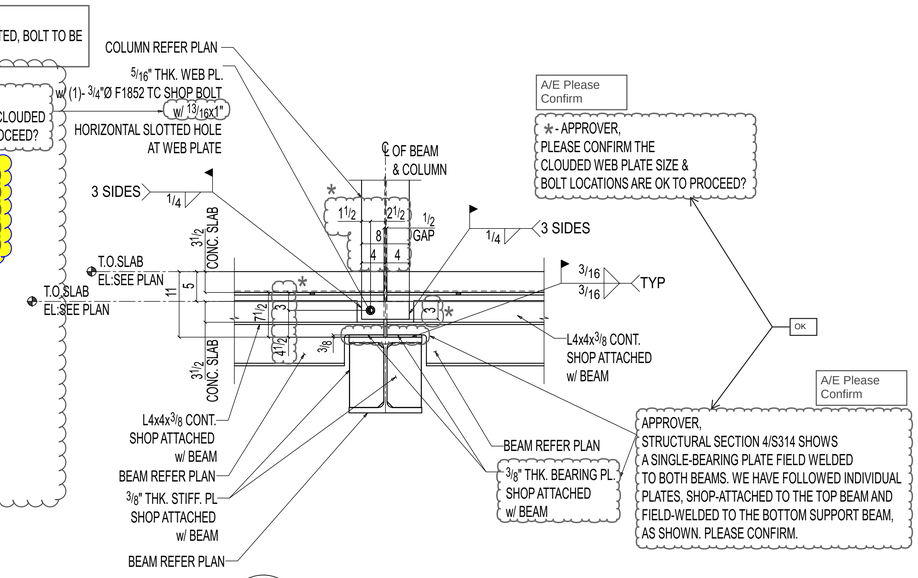

3 E4703 SECTION
(REF: 4/S314)

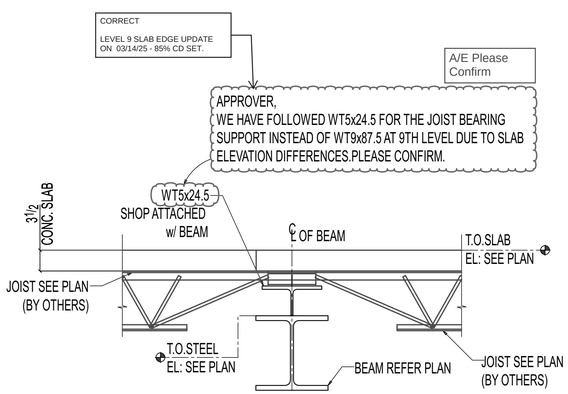

4 E4703 SECTION
(REF: 09/S307)

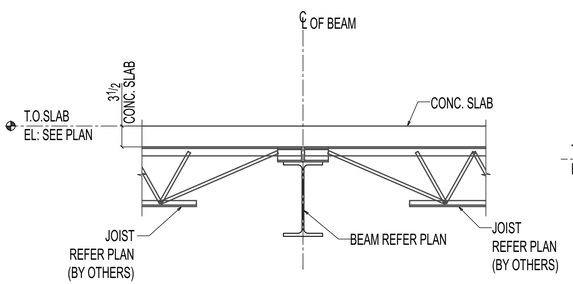

5 E4703 SECTION
(REF: 06/S306)

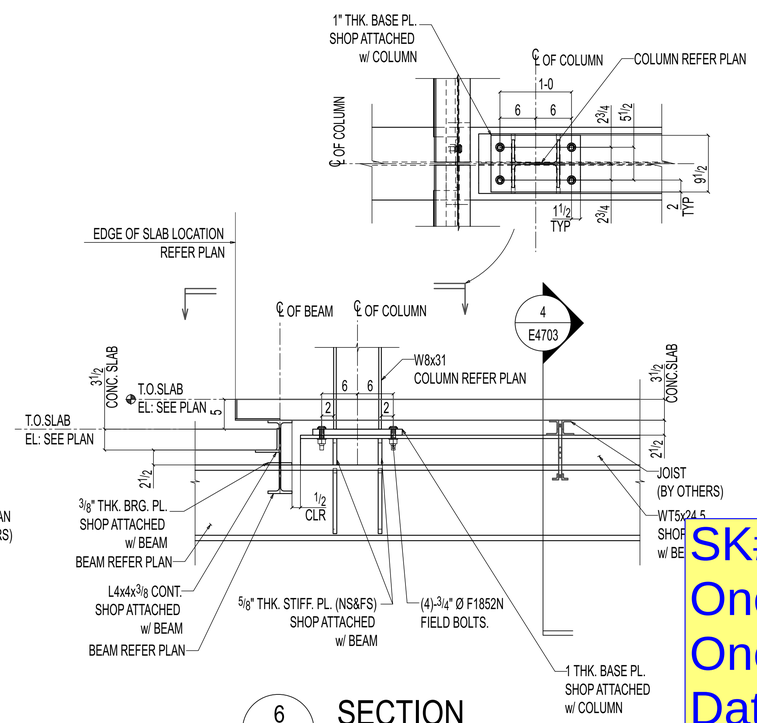

6 E4703 SECTION
(REF: 2/S314)

SK#26
One page
One **Queries**
Date: 07-14-2025

REVISIONS

REV#	DWN BY	DESCRIPTION	DATE
A	MNK	ISSUED FOR APPROVAL	Apr 22 2025

THE INFORMATION NOTED HEREON THIS DRAWING IS THE PROPERTY OF STEEL FAB ENTERPRISES, INC. AND SHALL NOTED BE USED WITHOUT WRITTEN CONSENT.

STEEL FAB
ENTERPRISES, LLC
MISCELLANEOUS METALS FABRICATOR AND ERECTORS
623 BAUMGARDNER ROAD, LANCASTER, PA 17603
FAX (717)464-9464
ERPRISES.COM

AISC CERTIFIED FABRICATOR AND ERECTOR

AND HOLDINGS 1 LP.
AVENUE
NUE, WASHINGTON, DC 20024
ES, INC.

7-2025	PROJ. NO. :	25001	REV # A
7-2025	DWG NO. :	E4703	

DWG DESCRIPTION : SECTIONS