Q1

For Corner Guards (SOW13), we are unable to find the exact locations in the architectural drawings. Please advise whether we should provide these items as Furnish Only. Also, please confirm the product details shown in Snap #01 as buy out item.

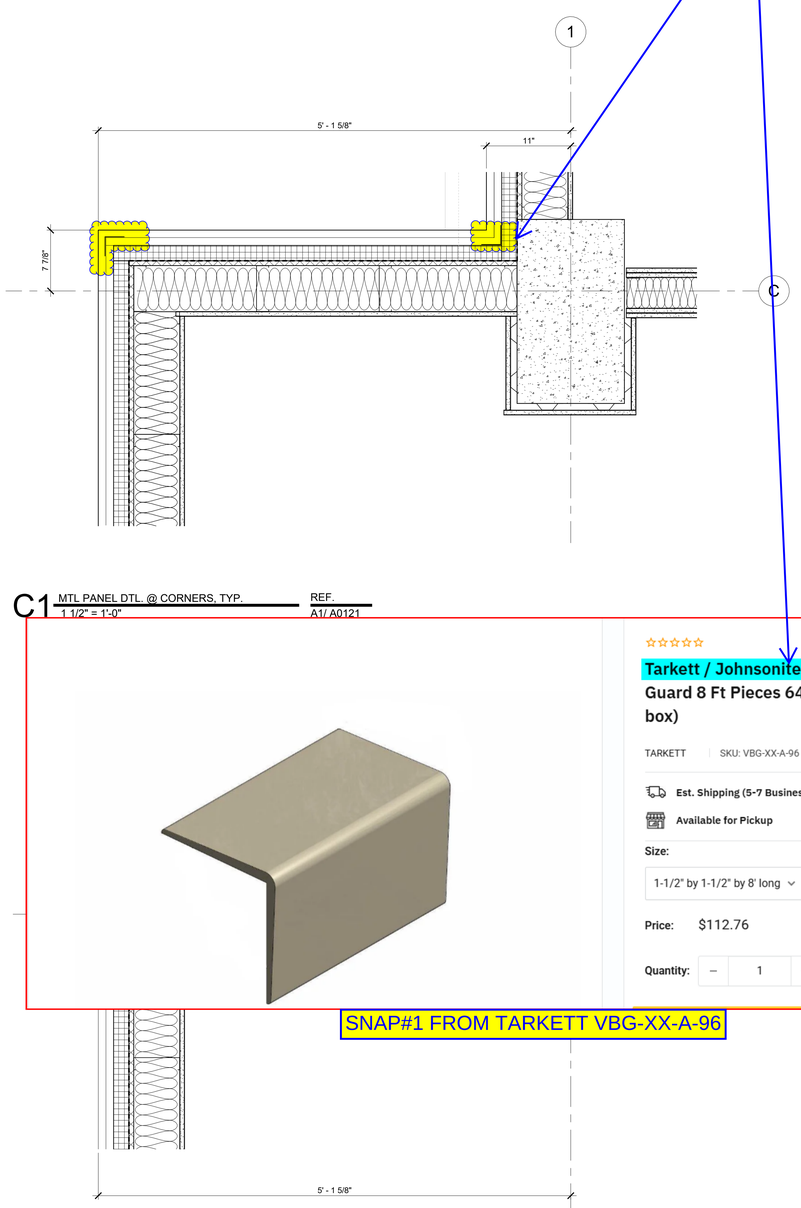

C1 MTL PANEL DTL. @ CORNERS, TYP.
1 1/2" = 1'-0"
REF. A1/ A0121

A1 MTL PANEL-MASONRY DTL. @ BAY WALL
1 1/2" = 1'-0"
REF. A1/ A0117

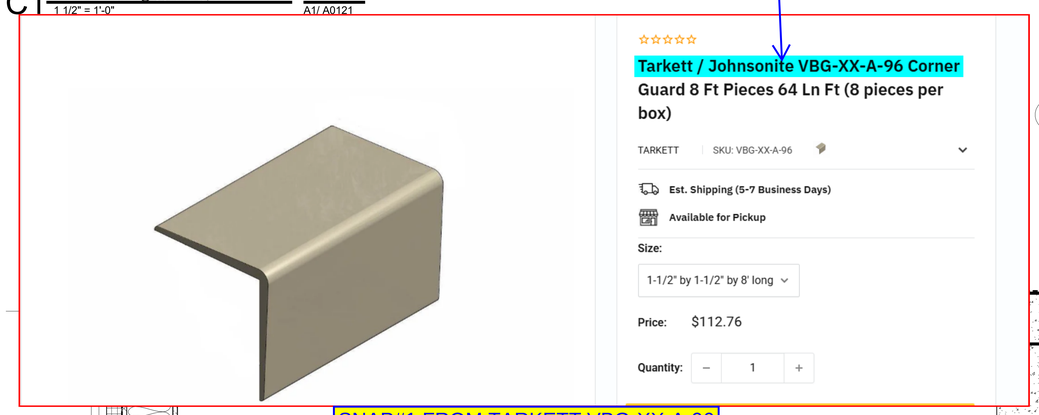

SNAP#1 FROM TARKETT VBG-XX-A-96

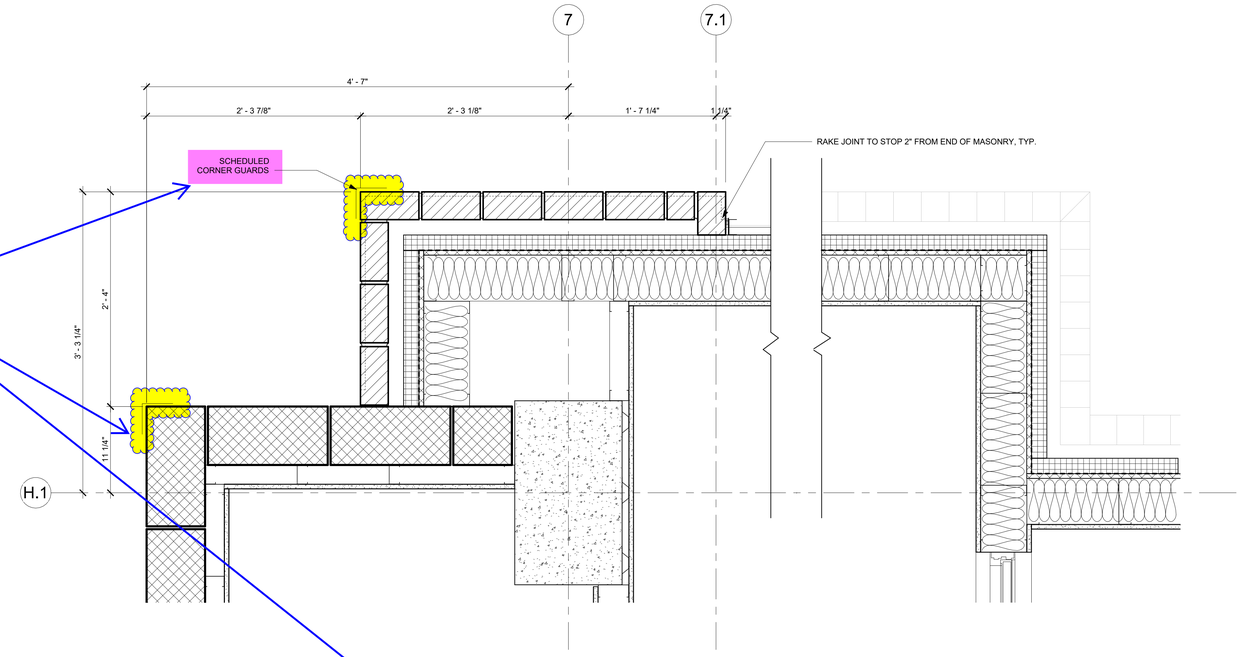

D5 VEHICULAR ENTRY/EXIT @ GARAGE LVL1
1 1/2" = 1'-0"
REF. A2/ A0112

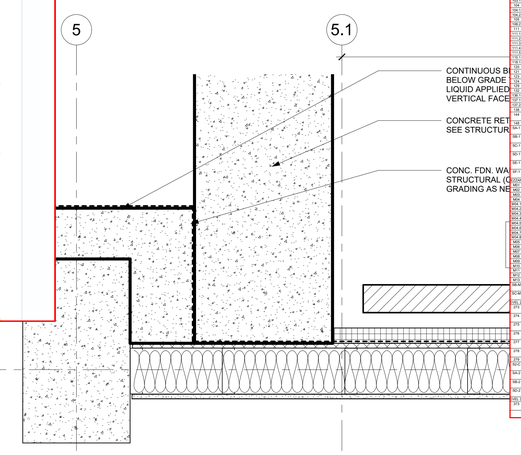

A5 SIDEWALK CONNECTION @ GARAGE LVL 1
1 1/2" = 1'-0"
REF. A2/ A0112

BOH ROOM FINISH SCHEDULE

NUMBER	NAME	FLOOR FINISH	WALL BASE	WALL FINISH	CEILING FINISH	FINISH COMMENTS
GARAGE LEVEL 1						
G101	ELEC. LOBBY	C-200HB	C-200HB	PT-200	ACT-200	
G202	ELEC.	PL-400	NO BASE - PAINTED CONC.	PT-408	EXPOSED SLAB	
G203	ELEC.	PL-400	NO BASE - PAINTED CONC.	PT-408	EXPOSED SLAB	
G204	ELEC.	PL-400	NO BASE - PAINTED CONC.	PT-408	EXPOSED SLAB	
G1-02	STAIR E	PAINTED LANDINGS & TREADS	NO BASE - PAINTED CONC.	PT-408	EXPOSED SLAB, PT-408	PAINTED RAILINGS, PIPE PROTECTOR, INTERIOR DOOR AND FRAME, CORNER GUARDS, INSTALL PHOTOLUMINESCENT TAPE AT DOOR OPENING
M-G2	STAIR E	PAINTED LANDINGS & TREADS	NO BASE - PAINTED CONC.	PT-408	EXPOSED SLAB, PT-408	PAINTED RAILINGS, PIPE PROTECTOR, INTERIOR DOOR AND FRAME, CORNER GUARDS, INSTALL PHOTOLUMINESCENT TAPE AT DOOR OPENING
GARAGE LEVEL 2						
G301	ELEC. LOBBY	C-200HB	C-200HB	PT-200	ACT-200	
G302	FIRE PUMP WATER ROOM	PL-400	NO BASE - PAINTED CONC.	PT-408	UNDERSLAB INSULATION	
G303	ELEC.	PL-400	NO BASE - PAINTED CONC.	PT-408	UNDERSLAB INSULATION	
G304	TT COMMS	PL-400	MB-400	PT-408	UNDERSLAB INSULATION	
G305	MAP	PL-400	NO BASE - PAINTED CONC.	PT-408	UNDERSLAB INSULATION	[redacted] LOW BUMPER ABOVE BASE, HIGH BUMPER (3FT) ABOVE FLOOR, MFG LAMINATE PLATE SHEET BETWEEN
G306	ELEC.	PL-400	NO BASE - PAINTED CONC.	PT-408	UNDERSLAB INSULATION	
G307	ELEC.	PL-400	NO BASE - PAINTED CONC.	PT-408	UNDERSLAB INSULATION	
G308	ELEC.	PL-400	NO BASE - PAINTED CONC.	PT-408	UNDERSLAB INSULATION	
G309	ELEC.	PL-400	NO BASE - PAINTED CONC.	PT-408	UNDERSLAB INSULATION	
G310	ELEC.	PL-400	NO BASE - PAINTED CONC.	PT-408	UNDERSLAB INSULATION	
G311	ELEC.	PL-400	NO BASE - PAINTED CONC.	PT-408	UNDERSLAB INSULATION	
G312	ELEC.	PL-400	NO BASE - PAINTED CONC.	PT-408	UNDERSLAB INSULATION	
G313	ELEC.	PL-400	NO BASE - PAINTED CONC.	PT-408	UNDERSLAB INSULATION	
G314	ELEC.	PL-400	NO BASE - PAINTED CONC.	PT-408	UNDERSLAB INSULATION	
G315	ELEC.	PL-400	NO BASE - PAINTED CONC.	PT-408	UNDERSLAB INSULATION	
G316	ELEC.	PL-400	NO BASE - PAINTED CONC.	PT-408	UNDERSLAB INSULATION	
G317	ELEC.	PL-400	NO BASE - PAINTED CONC.	PT-408	UNDERSLAB INSULATION	
G318	ELEC.	PL-400	NO BASE - PAINTED CONC.	PT-408	UNDERSLAB INSULATION	
G319	ELEC.	PL-400	NO BASE - PAINTED CONC.	PT-408	UNDERSLAB INSULATION	
G320	ELEC.	PL-400	NO BASE - PAINTED CONC.	PT-408	UNDERSLAB INSULATION	
G321	ELEC.	PL-400	NO BASE - PAINTED CONC.	PT-408	UNDERSLAB INSULATION	
G322	ELEC.	PL-400	NO BASE - PAINTED CONC.	PT-408	UNDERSLAB INSULATION	
G323	ELEC.	PL-400	NO BASE - PAINTED CONC.	PT-408	UNDERSLAB INSULATION	
G324	ELEC.	PL-400	NO BASE - PAINTED CONC.	PT-408	UNDERSLAB INSULATION	
G325	ELEC.	PL-400	NO BASE - PAINTED CONC.	PT-408	UNDERSLAB INSULATION	
G326	ELEC.	PL-400	NO BASE - PAINTED CONC.	PT-408	UNDERSLAB INSULATION	
G327	ELEC.	PL-400	NO BASE - PAINTED CONC.	PT-408	UNDERSLAB INSULATION	
G328	ELEC.	PL-400	NO BASE - PAINTED CONC.	PT-408	UNDERSLAB INSULATION	
G329	ELEC.	PL-400	NO BASE - PAINTED CONC.	PT-408	UNDERSLAB INSULATION	
G330	ELEC.	PL-400	NO BASE - PAINTED CONC.	PT-408	UNDERSLAB INSULATION	
G331	ELEC.	PL-400	NO BASE - PAINTED CONC.	PT-408	UNDERSLAB INSULATION	
G332	ELEC.	PL-400	NO BASE - PAINTED CONC.	PT-408	UNDERSLAB INSULATION	
G333	ELEC.	PL-400	NO BASE - PAINTED CONC.	PT-408	UNDERSLAB INSULATION	
G334	ELEC.	PL-400	NO BASE - PAINTED CONC.	PT-408	UNDERSLAB INSULATION	
G335	ELEC.	PL-400	NO BASE - PAINTED CONC.	PT-408	UNDERSLAB INSULATION	
G336	ELEC.	PL-400	NO BASE - PAINTED CONC.	PT-408	UNDERSLAB INSULATION	
G337	ELEC.	PL-400	NO BASE - PAINTED CONC.	PT-408	UNDERSLAB INSULATION	
G338	ELEC.	PL-400	NO BASE - PAINTED CONC.	PT-408	UNDERSLAB INSULATION	
G339	ELEC.	PL-400	NO BASE - PAINTED CONC.	PT-408	UNDERSLAB INSULATION	
G340	ELEC.	PL-400	NO BASE - PAINTED CONC.	PT-408	UNDERSLAB INSULATION	
G341	ELEC.	PL-400	NO BASE - PAINTED CONC.	PT-408	UNDERSLAB INSULATION	
G342	ELEC.	PL-400	NO BASE - PAINTED CONC.	PT-408	UNDERSLAB INSULATION	
G343	ELEC.	PL-400	NO BASE - PAINTED CONC.	PT-408	UNDERSLAB INSULATION	
G344	ELEC.	PL-400	NO BASE - PAINTED CONC.	PT-408	UNDERSLAB INSULATION	
G345	ELEC.	PL-400	NO BASE - PAINTED CONC.	PT-408	UNDERSLAB INSULATION	
G346	ELEC.	PL-400	NO BASE - PAINTED CONC.	PT-408	UNDERSLAB INSULATION	
G347	ELEC.	PL-400	NO BASE - PAINTED CONC.	PT-408	UNDERSLAB INSULATION	
G348	ELEC.	PL-400	NO BASE - PAINTED CONC.	PT-408	UNDERSLAB INSULATION	
G349	ELEC.	PL-400	NO BASE - PAINTED CONC.	PT-408	UNDERSLAB INSULATION	
G350	ELEC.	PL-400	NO BASE - PAINTED CONC.	PT-408	UNDERSLAB INSULATION	
G351	ELEC.	PL-400	NO BASE - PAINTED CONC.	PT-408	UNDERSLAB INSULATION	
G352	ELEC.	PL-400	NO BASE - PAINTED CONC.	PT-408	UNDERSLAB INSULATION	
G353	ELEC.	PL-400	NO BASE - PAINTED CONC.	PT-408	UNDERSLAB INSULATION	
G354	ELEC.	PL-400	NO BASE - PAINTED CONC.	PT-408	UNDERSLAB INSULATION	
G355	ELEC.	PL-400	NO BASE - PAINTED CONC.	PT-408	UNDERSLAB INSULATION	
G356	TT COMMS	PL-400	MB-400	PT-408	UNDERSLAB INSULATION	
G357	MAP	PL-400	NO BASE - PAINTED CONC.	PT-408	UNDERSLAB INSULATION	[redacted] LOW BUMPER ABOVE BASE, HIGH BUMPER (3FT) ABOVE FLOOR, MFG LAMINATE PLATE SHEET BETWEEN
G358	ELEC.	PL-400	NO BASE - PAINTED CONC.	PT-408	UNDERSLAB INSULATION	
G359	ELEC.	PL-400	NO BASE - PAINTED CONC.	PT-408	UNDERSLAB INSULATION	
G360	ELEC.	PL-400	NO BASE - PAINTED CONC.	PT-408	UNDERSLAB INSULATION	
G361	ELEC.	PL-400	NO BASE - PAINTED CONC.	PT-408	UNDERSLAB INSULATION	
G362	ELEC.	PL-400	NO BASE - PAINTED CONC.	PT-408	UNDERSLAB INSULATION	
G363	ELEC.	PL-400	NO BASE - PAINTED CONC.	PT-408	UNDERSLAB INSULATION	
G364	ELEC.	PL-400	NO BASE - PAINTED CONC.	PT-408	UNDERSLAB INSULATION	
G365	ELEC.	PL-400	NO BASE - PAINTED CONC.	PT-408	UNDERSLAB INSULATION	
G366	ELEC.	PL-400	NO BASE - PAINTED CONC.	PT-408	UNDERSLAB INSULATION	
G367	ELEC.	PL-400	NO BASE - PAINTED CONC.	PT-408	UNDERSLAB INSULATION	
G368	ELEC.	PL-400	NO BASE - PAINTED CONC.	PT-408	UNDERSLAB INSULATION	
G369	ELEC.	PL-400	NO BASE - PAINTED CONC.	PT-408	UNDERSLAB INSULATION	
G370	ELEC.	PL-400	NO BASE - PAINTED CONC.	PT-408	UNDERSLAB INSULATION	
G371	ELEC.	PL-400	NO BASE - PAINTED CONC.	PT-408	UNDERSLAB INSULATION	
G372	ELEVATOR VESTIBULE	PL-400	MB-400	PT-408	UNDERSLAB INSULATION	
G373	ELEC. STAIRS	CP-401	MB-401	PT-408	ACT-401	
G374	ELEC.	CP-401	MB-401	PT-408	ACT-401	
G375	ELEC.	CP-401	MB-401	PT-408	ACT-401	
G376	ELEC.	CP-401	MB-401	PT-408	ACT-401	
G377	ELEC.	CP-401	MB-401	PT-408	ACT-401	
G378	ELEC.	CP-401	MB-401	PT-408	ACT-401	
G379	ELEC.	CP-401	MB-401	PT-408	ACT-401	
G380	ELEC.	CP-401	MB-401	PT-408	ACT-401	
G381	ELEC.	CP-401	MB-401	PT-408	ACT-401	
G382	ELEC.	CP-401	MB-401	PT-408	ACT-401	
G383	ELEC.	CP-401	MB-401	PT-408	ACT-401	
G384	ELEC.	CP-401	MB-401	PT-408	ACT-401	
G385	ELEC.	CP-401	MB-401	PT-408	ACT-401	
G386	ELEC.	CP-401	MB-401	PT-408	ACT-401	
G387	ELEC.	CP-401	MB-401	PT-408	ACT-401	
G388	ELEC.	CP-401	MB-401	PT-408	ACT-401	
G389	ELEC.	CP-401	MB-401	PT-408	ACT-401	
G390	ELEC.	CP-401	MB-401	PT-408	ACT-401	
G391	ELEC.	CP-401	MB-401	PT-408	ACT-401	
G392	ELEC.	CP-401	MB-401	PT-408	ACT-401	
G393	ELEC.	CP-401	MB-401	PT-408	ACT-401	
G394	ELEC.	CP-401	MB-401	PT-408	ACT-401	
G395	ELEC.	CP-401	MB-401	PT-408	ACT-401	
G396	ELEC.	CP-401	MB-401	PT-408	ACT-401	
G397	ELEC.	CP-401	MB-401	PT-408	ACT-401	
G398	ELEC.	CP-401	MB-401	PT-408	ACT-401	
G399	ELEC.	CP-401	MB-401	PT-408	ACT-401	
G400	ELEC.	CP-401	MB-401	PT-408	ACT-401	
G401	ELEC.	CP-401	MB-401	PT-408	ACT-401	
G402	ELEC.	CP-401	MB-401	PT-408	ACT-401	
G403	ELEC.	CP-401	MB-401	PT-408	ACT-401	
G404	ELEC.	CP-401	MB-401	PT-408	ACT-401	
G405	ELEC.	CP-401	MB-401	PT-408	ACT-401	
G406	ELEC.	CP-401	MB-401	PT-408	ACT-401	
G407	ELEC.	CP-401	MB-401	PT-408	ACT-401	
G408	ELEC.	CP-401	MB-401	PT-408	ACT-401	
G409	ENGINEERING AND BUILDING MAINTENANCE	PL-400	MB-400	PT-408	UNDERSLAB INSULATION	
G410	ELEC.	PL-400	MB-400	PT-408	UNDERSLAB INSULATION	
G411	ELEC.	PL-400	NO BASE - PAINTED CONC.	PT-408	UNDERSLAB INSULATION	
G412	STORAGE	PL-400	MB-400	PT-408	ACT-401	
G413	STORAGE	PL-400	MB-400	PT-408	ACT-401	
G414	WAITING ROOM	PL-400	MB-400	PT-408	ACT-401	
G415	ELEC.	PL-400	MB-400	PT-408	UNDERSLAB INSULATION	
G1-01	STAIR E	PAINTED LANDINGS & TREADS	MB-400	PT-408	EXPOSED SLAB, PT-408	PAINTED RAILINGS, PIPE PROTECTOR, INTERIOR DOOR AND FRAME, CORNER GUARDS, INSTALL PHOTOLUMINESCENT TAPE AT DOOR OPENING
M-G1	STAIR E	PAINTED LANDINGS & TREADS	MB-400	PT-408	EXPOSED SLAB, PT-408	PAINTED RAILINGS, PIPE PROTECTOR, INTERIOR DOOR AND FRAME, CORNER GUARDS, INSTALL PHOTOLUMINESCENT TAPE AT DOOR OPENING
M-G1-T	STAIR T	PAINTED LANDINGS & TREADS	MB-400	PT-408	EXPOSED SLAB, PT-408	PAINTED RAILINGS, PIPE PROTECTOR, INTERIOR DOOR AND FRAME, CORNER GUARDS, INSTALL PHOTOLUMINESCENT TAPE AT DOOR OPENING
G01						
G02	VESTIBULE	C-200HB	MD-200	PT-200	PT-200	
G03	LUGGAGE	CP-401	MB-400	PT-408	PT-200	
G03.1	LUGGAGE CARTS	C-200HB	MD-200	MD-200	PT-200	
G04	ELEC. STAIRS	CP-401	MB-401	PT-408	ACT-401	
G05	ELEC.	CP-401	MB-401	PT-408	ACT-401	
G06.01	(1)	CP-401	MB-401	PT-408	ACT-401	
G06.02	(1)	CP-401	MB-401	PT-408	ACT-401	
G06.03	CLOSET	CP-401	MB-401	PT-408	ACT-401	
G11	KITCHEN	PL-400	MB-400	PMP-401	ACT-401	
G11.1	KITCHEN VESTIBULE	C-200HB	MD-200	MD-200	PT-200	
G11.2	KITCHEN VESTIBULE	CP-200	MD-200	MD-200	PT-200	
G11.3	KITCHEN VESTIBULE	CP-200	MD-200	MD-211	PT-200	
G11.4	KITCHEN VESTIBULE	CP-200	MD-200	MD-200	PT-200	
G12	ELEC.	PL-400	MB-400	PT-408	ACT-401	
G12.1	PANTRY	PL-400	MB-400	PMP-401	ACT-401	
G13	PANTRY	PL-400	MB-400	PMP-401	ACT-401	
G14	ELEC.	PL-400	MB-400	PT-408	EXPOSED SLAB, PT-408	
G15	UPS	PL-400	MB-400	PT-408	EXPOSED SLAB, PT-408	
G16	FUNCTION STORAGE	PL-400	MB-400	PT-408	EXPOSED SLAB, PT-408	
G17	FUNCTION	PL-400	MB-400	PT-408	EXPOSED SLAB, PT-408	
G18	PANTRY	PL-400	MB-400	PMP-401	ACT-401	
G19	LOUNGE	PL-400	MB-400	PT-408	EXPOSED SLAB, PT-408	
G20	STAGEHAND	CP-200	MB-400	PT-408	PT-200	
G21.1	STAGEHAND	CP-200	MB-400	PT-408	PT-200	
G21.2	ELEC.	CP-200	MB-400	PT-408	PT-200	
G22	BOH CORRIDOR	C-200	MB-400	PT-408	EXPOSED SLAB, PT-408	CORNER GUARDS (AN INCH (1.5") FTI HIGH, LOW BUMPER ABOVE BASE, HIGH BUMPER (3FT) ABOVE FLOOR, MFG LAMINATE PLATE SHEET BETWEEN
G23	STORAGE	C-200HB	MB-400	PT-408	EXPOSED SLAB, PT-408	PAINT EXPOSED SLAB, DUCT & PIPES
M-G1	STAIR A	PAINTED LANDINGS & TREADS	MB-400	PT-408	EXPOSED SLAB, PT-408	PAINTED RAILINGS, PIPE PROTECTOR, INTERIOR DOOR AND FRAME, CORNER GUARDS, INSTALL PHOTOLUMINESCENT TAPE AT DOOR OPENING
M-1	STAIR A	PAINTED LANDINGS & TREADS	MB-400	PT-408	EXPOSED SLAB, PT-408	PAINTED RAILINGS, PIPE PROTECTOR, INTERIOR DOOR AND FRAME, CORNER GUARDS, INSTALL PHOTOLUMINESCENT TAPE AT DOOR OPENING
M-1.1	STAIR C	PAINTED LANDINGS & TREADS	MB-400	PT-408	EXPOSED SLAB, PT-408	PAINTED RAILINGS, PIPE PROTECTOR, INTERIOR DOOR AND FRAME, CORNER GUARDS, INSTALL PHOTOLUMINESCENT TAPE AT DOOR OPENING
M-1.2	STAIR C	PAINTED LANDINGS & TREADS	MB-400	PT-408	EXPOSED SLAB, PT-408	PAINTED RAILINGS, PIPE PROTECTOR, INTERIOR DOOR AND FRAME, CORNER GUARDS, INSTALL PHOTOLUMINESCENT TAPE AT DOOR OPENING
M-1.3	STAIR E	PAINTED LANDINGS & TREADS	MB-400	PT-408	EXPOSED SLAB, PT-408	PAINTED RAILINGS, PIPE PROTECTOR, INTERIOR DOOR AND FRAME, CORNER GUARDS, INSTALL PHOTOLUMINESCENT TAPE AT DOOR OPENING
M-1.T	STAIR T	PAINTED LANDINGS & TREADS	MB-400	PT-408	EXPOSED SLAB, PT-408	PAINTED RAILINGS, PIPE PROTECTOR, INTERIOR DOOR AND FRAME, CORNER GUARDS, INSTALL PHOTOLUMINESCENT TAPE AT DOOR OPENING
LEVEL 2						
M-2	BOH CORRIDOR	C-200	MB-400	PT-408	EXPOSED SLAB, PT-408	PAINT EXPOSED SLAB, DUCT & PIPES
M2	JAN	PL-400	MB-400	PT-408	EXPOSED SLAB, PT-408	PAINT EXPOSED SLAB, DUCT & PIPES
M3	BOARD ROOM	CP-402	MB-400	PT-408	EXPOSED SLAB, PT-408	PAINT EXPOSED SLAB, DUCT & PIPES
M4.1	GENERAL MANAGER	CP-402	MB-400	PT-408	EXPOSED SLAB, PT-408	PAINT EXPOSED SLAB, DUCT & PIPES
M4.2	GENERAL MANAGER	CP-402	MB-400	PT-408	EXPOSED SLAB, PT-408	PAINT EXPOSED SLAB, DUCT & PIPES
M4.3	STORAGE	CP-402	MB-400	PT-408	EXPOSED SLAB, PT-408	PAINT EXPOSED SLAB, DUCT & PIPES
M5.1	SALES MANAGER	CP-402	MB-400	PT-408	EXPOSED SLAB, PT-408	PAINT EXPOSED SLAB, DUCT & PIPES
M5.2	SALES MANAGER	CP-402	MB-400	PT-408	EXPOSED SLAB, PT-408	PAINT EXPOSED SLAB, DUCT & PIPES
M5.3	SALES	CP-402	MB-400	PT-408	EXPOSED SLAB, PT-408	PAINT EXPOSED SLAB, DUCT & PIPES
M6.1	MARKETING	CP-402	MB-400	PT-408	EXPOSED SLAB, PT-408	PAINT EXPOSED SLAB, DUCT & PIPES
M6.2	HR	CP-402	MB-400	PT-408	EXPOSED SLAB, PT-408	PAINT EXPOSED SLAB, DUCT & PIPES
M6.3	F&B MANAGER	CP-402	MB-400	PT-408	EXPOSED SLAB, PT-408	PAINT EXPOSED SLAB, DUCT & PIPES
M7	STORAGE	PL-400	MB-400	PT-408	EXPOSED SLAB, PT-408	PAINT EXPOSED SLAB, DUCT & PIPES
M8	STORAGE	PL-400	MB-400	PT-408	EXPOSED SLAB, PT-408	PAINT EXPOSED SLAB, DUCT & PIPES
M9	STORAGE	PL-400	MB-400	PT-408	EXPOSED SLAB, PT-408	PAINT EXPOSED SLAB, DUCT & PIPES
M10	ELEC.	PL-400	MB-400	PT-408	EXPOSED SLAB, PT-408	PAINT EXPOSED SLAB, DUCT & PIPES
M11	HR	PL-400	MB-400	PT-408	EXPOSED SLAB, PT-408	PAINT EXPOSED SLAB, DUCT & PIPES
M12	HR	PL-400	MB-400	LL-401	CPT, PT-408	
M13	HR	PL-400	MB-400	LL-401	CPT, PT-408	
M14	STORAGE	PL-400	MB-400	PT-408	EXPOSED SLAB, PT-408	PAINT EXPOSED SLAB, DUCT & PIPES
M15	IT COMMS	PL-400	MB-400	PT-408	EXPOSED SLAB, PT-408	PAINT EXPOSED SLAB, DUCT & PIPES
M16	STAIR B	PAINTED LANDINGS & TREADS	MB-400	PT-408	EXPOSED SLAB, PT-408	PAINTED RAILINGS, PIPE PROTECTOR, INTERIOR DOOR AND FRAME, CORNER GUARDS, INSTALL PHOTOLUMINESCENT TAPE AT DOOR OPENING
M-M	STAIR C	PAINTED LANDINGS & TREADS	MB-400	PT-408	EXPOSED SLAB, PT-408	PAINTED RAILINGS, PIPE PROTECTOR, INTERIOR DOOR AND FRAME, CORNER GUARDS, INSTALL PHOTOLUMINESCENT TAPE AT DOOR OPENING
LEVEL 3						
273	ELEC.	CP-100	MB-400	PT-408	EXPOSED PAINTED CONCRETE	
274	ELEC.	CP-100	MB-400	PT-408	EXPOSED PAINTED CONCRETE	
275	TT COMMS	PL-400	MB-400	PT-408	EXPOSED PAINTED CONCRETE	
276	HOUSEKEEPING	PL-400	MB-400	PT-408	EXPOSED PAINTED CONCRETE	
277	ELEC ROOM	PL-400	MB-400	PT-408	EXPOSED PAINTED CONCRETE	
278	ELEC.	CP-100	MB-400	PT-408	EXPOSED PAINTED CONCRETE	
279	ORL	CP-100	MB-400	PT-408	PAINT TBD	
M-C	STAIR C	PAINTED LANDINGS & TREADS	MB-400	PT-408	EXPOSED SLAB, PT-408	PAINTED RAILINGS, PIPE PROTECTOR, INTERIOR DOOR AND FRAME, CORNER GUARDS, INSTALL PHOTOLUMINESCENT TAPE AT DOOR OPENING
M-4	STAIR A	PAINTED LANDINGS & TREADS	MB-400	PT-408	EXPOSED SLAB, PT-408	PAINTED RAILINGS, PIPE PROTECTOR, INTERIOR DOOR AND FRAME, CORNER GUARDS, INSTALL PHOTOLUMINESCENT TAPE AT DOOR OPENING
M-2	STAIR B	PAINTED LANDINGS & TREADS	MB-400	PT-408	EXPOSED SLAB, PT-408	PAINTED RAILINGS, PIPE PROTECTOR, INTERIOR DOOR AND FRAME, CORNER GUARDS, INSTALL PHOTOLUMINESCENT TAPE AT DOOR OPENING
M-2	STAIR D	PAINTED LANDINGS & TREADS	MB-400	PT-408	EXPOSED SLAB, PT-408	PAINTED RAILINGS, PIPE PROTECTOR, INTERIOR DOOR AND FRAME, CORNER GUARDS, INSTALL PHOTOLUMINESCENT TAPE AT DOOR OPENING
LEVEL 4						
371	ELEC.	CP-100	MB-400	PT-408	EXPOSED PAINTED CONCRETE	

NUMBER	NAME	FLOOR FINISH	WALL BSD
374	ELEC.	CP-100	MB-400
375	TT COMMS	PL-400	MB-400
376	HOUSEKEEPING	PL-400	MB-400
377	ELEC ROOM	PL-400	MB-400
378	ELEC.	CP-100	MB-400
379	ORL	CP-100	MB-400
M-4	STAIR A	PAINTED LANDINGS & TREADS	MB-400
M-2	STAIR B	PAINTED LANDINGS & TREADS	MB-400
M-C	STAIR C	PAINTED LANDINGS & TREADS	MB-400
LEVEL 4			
473	ELEC.	CP-100	MB-400
474	ELEC.	CP-100	MB-400
475	COMMR	PL-400	MB-400
476	HOUSEKEEPING	PL-400	MB-400
477	ELEC ROOM	PL-400	MB-400
478	ELEC.	CP-100	MB-400
479	ORL	CP-100	MB-400
M-4	STAIR A	PAINTED LANDINGS & TREADS	MB-400
M-2	STAIR B	PAINTED LANDINGS & TREADS	MB-400
M-C	STAIR C	PAINTED LANDINGS & TREADS	MB-400
LEVEL 5 PENTHOUSE			
508	MECH	SP-200	MB-400
509	MECH / ELEC	PL-400	MB-400
510	STORAGE	PL-400	MB-400
511	STORAGE	PL-400	MB-400
512	STORAGE	PL-400	MB-400
513	ELEC.	PL-400	MB-400
M-4	STAIR A	PAINTED LANDINGS & TREADS	MB-400
M-2	STAIR B	PAINTED LANDINGS & TREADS	MB-400
M-C	STAIR C	PAINTED LANDINGS & TREADS	MB-400
M-D	STAIR D	PAINTED LANDINGS & TREADS	MB-400

KEYNOTE	NOTE	MANUFACTURER
ACT		
ACT-401	(ACT @ KITCHEN, LAUNDRY)	ARMSTRONG CEILINGS
ACT-402	(LAY-IN CEILING - BOH)	ARMSTRONG CEILINGS
CARPET		
CP-401	(ADMIN CARPET TILE	SHAW CONTRACT
CP-402	(ARTICLE CARPET TILE	SHAW CONTRACT
DRAPERY		
DR-401	(ROLLER SHADE @ BREAK ROOM	MECHOSHADE
FLOORING		
FL-400	(BREAK ROOM FLOOR TILE	DALTILE
FL-401	(BOH RESTROOM FLOOR TILE	DALTILE
FL-403	(KITCHEN QUARRY TILE	DALTILE
FL-404	(BOH RESTROOM WALL TILE RESTROOM	DALTILE
FL-405	(SHOULD CONVER TO @ BOH	TILEBE
FRP		
FRP-401	(FRP - WHITE	CRANE COMPOSITES
FRP-402	(FRP - BLACK	CRANE COMPOSITES
PAINT		
PT-401	PAINT @ BOH RESTROOM WALLS	SHERWIN WILLIAMS
PT-402	PAINT @ HOTEL ADMIN	SHERWIN WILLIAMS
PT-403	PAINT @ BREAKROOM	SHERWIN WILLIAMS
PT-404	ACCENT PAINT @ BREAKROOM	SHERWIN WILLIAMS
PT-405	DOOR & FRM PAINT @ BREAKROOM	SHERWIN WILLIAMS
PT-406	PAINT @ BOH RESTROOMS	SHERWIN WILLIAMS
PT-407	PAINT @ BOH CORRIDOR	SHERWIN WILLIAMS
PT-408	PENCIL WALL & COLUMN PAINT @ BOH	SHERWIN WILLIAMS
PT-409	PAINT @ STAIR RAILING, GARAGE LEVEL AND STAIR	SHERWIN WILLIAMS
SIGNAGE		
SG-400	[redacted]	[redacted]
SG-401	[redacted]	[redacted]
SP-400	PHOTOLUMINESCENT ANGIAL TAPE	TARKETT SAFETYFIRST
SP-401	PHOTOLUMINESCENT TREADS	TARKETT SAFETYFIRST
SP-402	PHOTOLUMINESCENT CORNER GUARD	TARKETT SAFETYFIRST
SP-403	PHOTOLUMINESCENT WALL BAND	TARKETT SAFETYFIRST
VERIFY TO ENGINEERING		
SE-400	(WASHER @ HOUSEKEEPING	JENNAIR
SE-401	(DRYER @ HOUSEKEEPING	JENNAIR
SE-402	(BREAK ROOM - DISHWASHER	GE
SE-403	(BREAK ROOM - SINK	ELKAY
SE-404	(BREAK ROOM - FAUCET	ELKAY
SE-405	(BREAK ROOM - MICROWAVE	GE
SE-406	(BREAK ROOM - REFRIGERATOR	GE
SE-408	(BREAK ROOM - DISPOSAL	BADGER
STONE		
ST-401	(SOLID SURFACE @ BREAK ROOM WILLISCRN	CORIAN
TILE		
TL-401	(WALL TILE @ BOH RESTROOMS	DALTILE
WALLBASE		
WB-401	(BATCHORD FL-401 FLOOR TILE	DALTILE
WB-402	(BATCHORD FL-402 FLOOR TILE	DALTILE
WB-403	RUBBER BASE FOR CP-401	TARKETT JOHNSONITE
WB-404	RUBBER BASE FOR CP-402	TARKETT JOHNSONITE
WB-405	RUBBER WALL BASE @ BOH MEP, STORAGE, BIKE	TARKETT JOHNSONITE
WB-406	(BATCHORD FL-403 FLOOR TILE	TBD

SNAP#2 FROM A0918

1' - 10 1/8"

ALIGN EXTERIOR FACE W/ ADJ. STONE PIER

5/8" GWB W/ TRIM & FINISHES PER SCHEDULE

SK#02
ONE page
ONE-Query
Date: 01-09-2026

FILLAT+ ARCHITECTURE
400 E. PRATT | SUITE 502 | BALTIMORE MD | 21202
Ph: 410.576.9310 | PFARC.COM

STRUCTURAL ENGINEER
TADJER-COHEN-EDELSON ASSOCIATES ,INC.
1109 SILVER SPRING ST., SUITE 510
SILVER SPRING, MD 20910
(301) 587-1820

MEP ENGINEER
ALLEN & SHARIFF ENGINEERING, LLC
7061 DEEPAGE DRIVE
COLUMBIA, MD 21045
(443) 545-7100

CIVIL ENGINEER
BOHLER
901 DULANEY VALLEY ROAD, SUITE 801
TOWSON, MD 21204
(410) 821-7900

INTERIOR DESIGNER
LOONEY & ASSOCIATES
20 N WACKER DR. SUITE 2010
CHICAGO, ILLINOIS 60606
(312) 329-0464

LANDSCAPE
EDSA
400 E. PRATT STREET, SUITE 502
BALTIMORE, MARYLAND 21202
(443)539-3350

TECHNOLOGY
MICHAEL RAISER