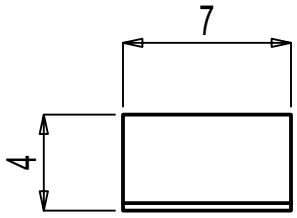

8 L4x4x5/16x0-7 a738

GRADE: A36

General Notes

*Structural steel shall conform to ASTM-A992.
*Structural SQR/RND.tubing conform to ASTM A500 Grade C
*Pipe shall conform to ASTM A53, Grade B.
*Channels, Angles and plates shall conform to A36.
*All bolts shall be 3/4" High strength in accordance with ASTM A325 (UNO)
*Welding Electrodes for Carbon steel :E70xx
*Structural members are to be shop primer (U.N.O).
*Surface Preparation-SSPC-SP3 UNO.
*If welds exposed to view, should be ground smooth.

# of Copies	Revision/ Issue	Destination	Date
1	0	FOR FABRICATION	09-22-2025

IRON FABRICATION SERVICES, LLC.

3029 M. Street, NW, Suite 202
Washington, DC 20007
Tel: 202-800-5599
Fax: 202-478-0303

Project Name and Address
MARYLAND AVENUE

Location: **1250 MARYLAND AVENUE SW WASHINGTON, DC 20024**

Contractor:
BALFOUR BEATTY

Approved for Fabrication by:	Signature

Contract # **224009** Drawing # **a738**

Contract Item: **ANGLE**

Ref: **SOW - 03: F-03.02, F-03.03, F-03.04, F-03.05**

Date **01/ 23/ 2025**

Scale VARIES

Drawing Title: **ANGLE**

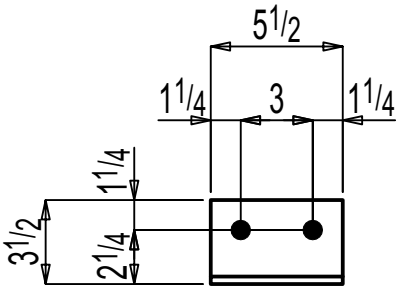

12 L3 1/2x3x5/16x0-5 1/2 a1095

GRADE: A36

HOLE:13/16 Ø (U.N.O)

General Notes

*Structural steel shall conform to ASTM-A992.
*Structural SQR/RND.tubing conform to ASTM A500 Grade C
*Pipe shall conform to ASTM A53, Grade B.
*Channels, Angles and plates shall conform to A36.
*All bolts shall be 3/4" High strength in accordance with ASTM A325 (UNO)
*Welding Electrodes for Carbon steel :E70xx
*Structural members are to be shop primer (U.N.O).
*Surface Preparation-SSPC-SP3 UNO.
*If welds exposed to view, should be ground smooth.

# of Copies	Revision/ Issue	Destination	Date
1	0	FOR FABRICATION	09-22-2025

IRON FABRICATION SERVICES, LLC.

3029 M. Street, NW, Suite 202
Washington, DC 20007
Tel: 202-800-5599
Fax: 202-478-0303

Project Name and Address
MARYLAND AVENUE

Location: **1250 MARYLAND AVENUE SW WASHINGTON, DC 20024**

Contractor:
BALFOUR BEATTY

Approved for Fabrication by:	Signature

Contract # **224009** Drawing # **a1095**

Contract Item: **ANGLE**

Ref: **SOW - 03: F-03.06, F-03.07, F-03.08**

Date **01/ 23/ 2025**

Scale VARIES

Drawing Title: **ANGLE**

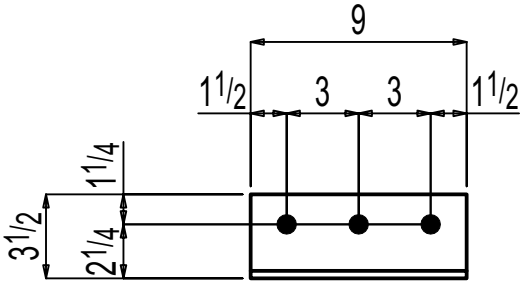

4 L3 1/2x3x5/16x0-9 a1136

GRADE: A36

HOLE:13/16 Ø (U.N.O)

General Notes

*Structural steel shall conform to ASTM-A992.
*Structural SQR/RND.tubing conform to ASTM A500 Grade C
*Pipe shall conform to ASTM A53, Grade B.
*Channels, Angles and plates shall conform to A36.
*All bolts shall be 3/4" High strength in accordance with ASTM A325 (UNO)
*Welding Electrodes for Carbon steel :E70xx
*Structural members are to be shop primer (U.N.O).
*Surface Preparation-SSPC-SP3 UNO.
*If welds exposed to view, should be ground smooth.

# of Copies	Revision/ Issue	Destination	Date
1	0	FOR FABRICATION	09-22-2025

IRON FABRICATION SERVICES, LLC.

3029 M. Street, NW, Suite 202
Washington, DC 20007
Tel: 202-800-5599
Fax: 202-478-0303

Project Name and Address
MARYLAND AVENUE

Location: **1250 MARYLAND AVENUE SW WASHINGTON, DC 20024**

Contractor:
BALFOUR BEATTY

Approved for Fabrication by:	Signature

Contract # **224009** Drawing # **a1136**

Contract Item: **ANGLE**

Ref:
SOW - 03: F-03.09

Date **01/ 23/ 2025**

Scale VARIES

Drawing Title:
ANGLE

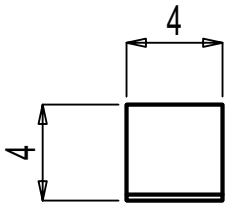

7 L4x4x1/4x0-4 a2573

GRADE: A36

General Notes

*Structural steel shall conform to ASTM-A992.
*Structural SQR/RND.tubing conform to ASTM A500 Grade C
*Pipe shall conform to ASTM A53, Grade B.
*Channels, Angles and plates shall conform to A36.
*All bolts shall be 3/4" High strength in accordance with ASTM A325 (UNO)
*Welding Electrodes for Carbon steel :E70xx
*Structural members are to be shop primer (U.N.O).
*Surface Preparation-SSPC-SP3 UNO.
*If welds exposed to view, should be ground smooth.

# of Copies	Revision/ Issue	Destination	Date
1	0	FOR FABRICATION	09-22-2025

IRON FABRICATION SERVICES, LLC.

3029 M. Street, NW, Suite 202
Washington, DC 20007
Tel: 202-800-5599
Fax: 202-478-0303

Project Name and Address
MARYLAND AVENUE

Location: **1250 MARYLAND AVENUE SW WASHINGTON, DC 20024**

Contractor:
BALFOUR BEATTY

Approved for Fabrication by:	Signature

Contract # **224009** Drawing # **a2573**

Contract Item: **ANGLE**

Ref:
SOW - 03: F-03.05, F-03.07, F-03.08,

Date **01/ 23/ 2025**

Scale VARIES

Drawing Title:
ANGLE

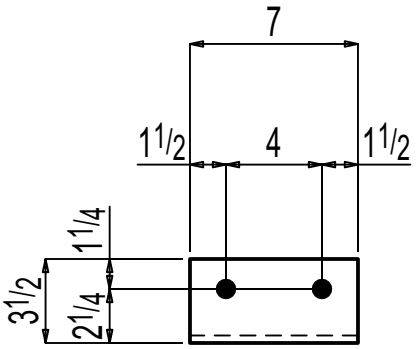

2 L3 1/2x3x5/16x0-7 a3514

GRADE: A36

HOLE:13/16 Ø (U.N.O)

General Notes

*Structural steel shall conform to ASTM-A992.
*Structural SQR/RND.tubing conform to ASTM A500 Grade C
*Pipe shall conform to ASTM A53, Grade B.
*Channels, Angles and plates shall conform to A36.
*All bolts shall be 3/4" High strength in accordance with ASTM A325 (UNO)
*Welding Electrodes for Carbon steel :E70xx
*Structural members are to be shop primer (U.N.O).
*Surface Preparation-SSPC-SP3 UNO.
*If welds exposed to view, should be ground smooth.

# of Copies	Revision/ Issue	Destination	Date
1	0	FOR FABRICATION	09-22-2025

IRON FABRICATION SERVICES, LLC.

3029 M. Street, NW, Suite 202
Washington, DC 20007
Tel: 202-800-5599
Fax: 202-478-0303

Project Name and Address
MARYLAND AVENUE

Location: **1250 MARYLAND AVENUE SW WASHINGTON, DC 20024**

Contractor:
BALFOUR BEATTY

Approved for Fabrication by:	Signature

Contract # **224009** Drawing # **a3514**

Contract Item: **ANGLE**

Ref:
SOW - 03: F-03.05

Date **01/ 23/ 2025**

Scale VARIES

Drawing Title:
ANGLE

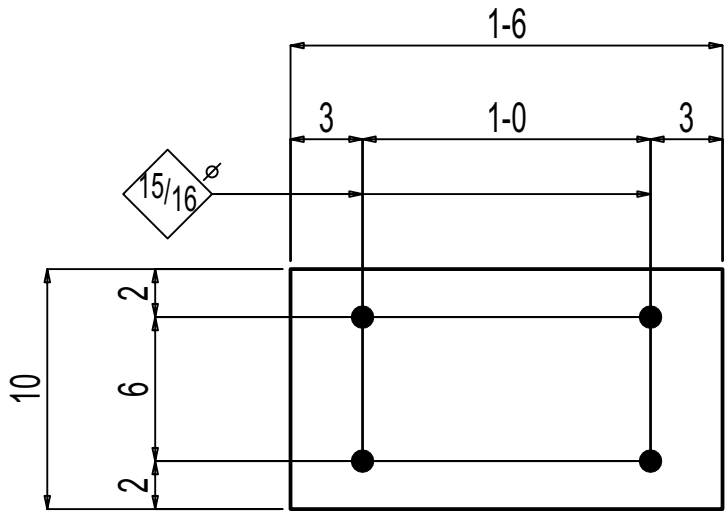

15 PL1 1/4x10x1-6 bp1000

GRADE: A36

HOLE: 13/16 Ø (U.N.O)

General Notes

*Structural steel shall conform to ASTM-A992.
*Structural SQR/RND.tubing conform to ASTM A500 Grade C
*Pipe shall conform to ASTM A53, Grade B.
*Channels, Angles and plates shall conform to A36.
*All bolts shall be 3/4" High strength in accordance with ASTM A325 (UNO)
*Welding Electrodes for Carbon steel :E70xx
*Structural members are to be shop primer (U.N.O).
*Surface Preparation-SSPC-SP3 UNO.
*If welds exposed to view, should be ground smooth.

# of Copies	Revision/ Issue	Destination	Date
1	0	FOR FABRICATION	09-22-2025

IRON FABRICATION SERVICES, LLC.

3029 M. Street, NW, Suite 202
Washington, DC 20007
Tel: 202-800-5599
Fax: 202-478-0303

Project Name and Address
MARYLAND AVENUE

Location: **1250 MARYLAND AVENUE SW WASHINGTON, DC 20024**

Contractor:
BALFOUR BEATTY

Approved for Fabrication by:	Signature

Contract # **224009** Drawing # **bp1000**

Contract Item: **BASE PLATE**

Ref: **SOW - 03: F-03.02, F-03.03, F-03.0**

Date **01/ 23/ 2025**

Scale VARIES

Drawing Title: **BASE PLATE**

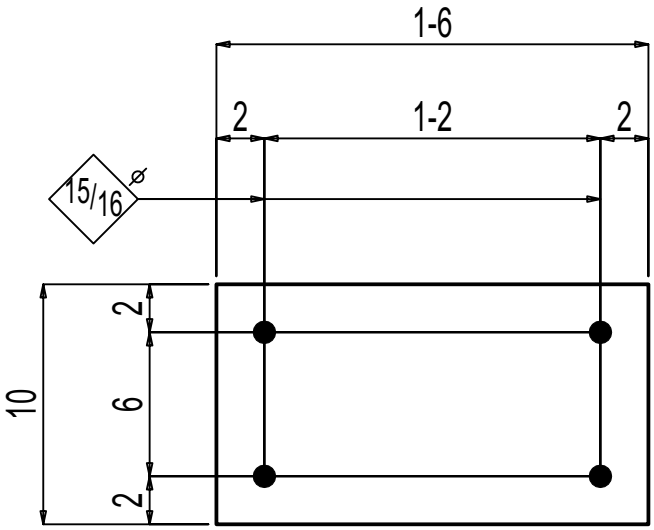

7 PL1 1/4x10x1-6 bp1001

GRADE: A36

HOLE: 13/16 Ø (U.N.O)

General Notes

*Structural steel shall conform to ASTM-A992.
*Structural SQR/RND.tubing conform to ASTM A500 Grade C
*Pipe shall conform to ASTM A53, Grade B.
*Channels, Angles and plates shall conform to A36.
*All bolts shall be 3/4" High strength in accordance with ASTM A325 (UNO)
*Welding Electrodes for Carbon steel :E70xx
*Structural members are to be shop primer (U.N.O).
*Surface Preparation-SSPC-SP3 UNO.
*If welds exposed to view, should be ground smooth.

# of Copies	Revision/ Issue	Destination	Date
1	0	FOR FABRICATION	09-22-2025

IRON FABRICATION SERVICES, LLC.

3029 M. Street, NW, Suite 202
Washington, DC 20007
Tel: 202-800-5599
Fax: 202-478-0303

Project Name and Address
MARYLAND AVENUE

Location: **1250 MARYLAND AVENUE SW WASHINGTON, DC 20024**

Contractor:
BALFOUR BEATTY

Approved for Fabrication by:	Signature

Contract # **224009** Drawing # **bp1001**

Contract Item: **BASE PLATE**

Ref: **SOW - 03: F-03.02, F-03.03, F-03.04, F-03.05**

Date **01/ 23/ 2025**

Drawing Title: **BASE PLATE**

Scale VARIES

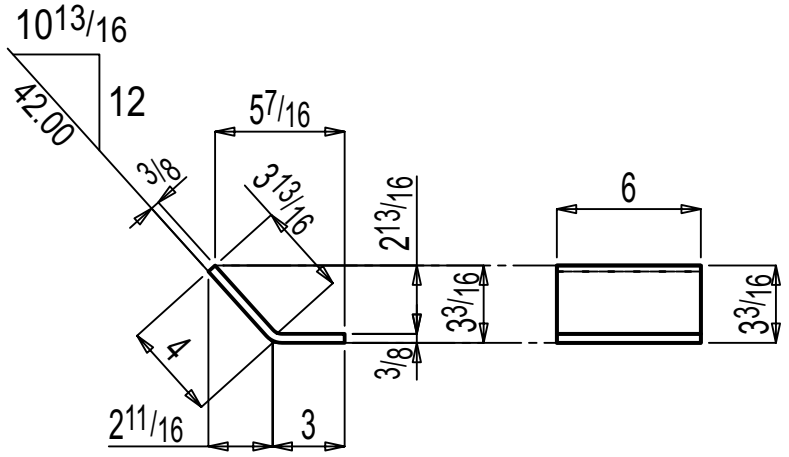

7 PL 3/8x6 13/16x0-6 bpl1994

GRADE: A36

General Notes

*Structural steel shall conform to ASTM-A992.
*Structural SQR/RND.tubing conform to ASTM A500 Grade C
*Pipe shall conform to ASTM A53, Grade B.
*Channels, Angles and plates shall conform to A36.
*All bolts shall be 3/4" High strength in accordance with ASTM A325 (UNO)
*Welding Electrodes for Carbon steel :E70xx
*Structural members are to be shop primer (U.N.O).
*Surface Preparation-SSPC-SP3 UNO.
*If welds exposed to view, should be ground smooth.

# of Copies	Revision/ Issue	Destination	Date
1	0	FOR FABRICATION	09-22-2025

IRON FABRICATION SERVICES, LLC.

3029 M. Street, NW, Suite 202
Washington, DC 20007
Tel: 202-800-5599
Fax: 202-478-0303

Project Name and Address
MARYLAND AVENUE

Location: **1250 MARYLAND AVENUE SW WASHINGTON, DC 20024**

Contractor:
BALFOUR BEATTY

Approved for Fabrication by:	Signature

Contract # **224009** Drawing # **bpl1994**

Contract Item: **BENT PLATE**

Ref: **SOW - 03: F-03.05, F-03.06, F-03.07, F-03.08,**

Date **01/ 23/ 2025**

Scale VARIES

Drawing Title: **BENT PLATE**

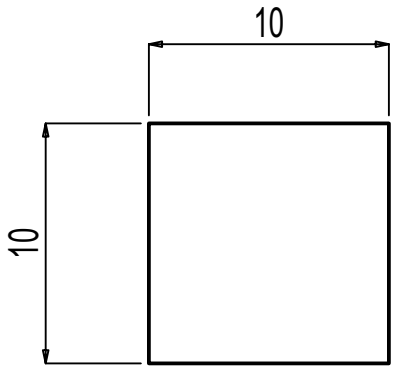

8 PL 5/8x10x0-10 cp1000

GRADE: A36

General Notes

*Structural steel shall conform to ASTM-A992.
*Structural SQR/RND.tubing conform to ASTM A500 Grade C
*Pipe shall conform to ASTM A53, Grade B.
*Channels, Angles and plates shall conform to A36.
*All bolts shall be 3/4" High strength in accordance with ASTM A325 (UNO)
*Welding Electrodes for Carbon steel :E70xx
*Structural members are to be shop primer (U.N.O).
*Surface Preparation-SSPC-SP3 UNO.
*If welds exposed to view, should be ground smooth.

# of Copies	Revision/ Issue	Destination	Date
1	0	FOR FABRICATION	09-22-2025

IRON FABRICATION SERVICES, LLC.

3029 M. Street, NW, Suite 202
Washington, DC 20007
Tel: 202-800-5599
Fax: 202-478-0303

Project Name and Address
MARYLAND AVENUE

Location: **1250 MARYLAND AVENUE SW WASHINGTON, DC 20024**

Contractor:
BALFOUR BEATTY

Approved for Fabrication by:	Signature

Contract # **224009** Drawing # **cp1000**

Contract Item: **CAP PLATE**

Ref: **SOW - 03: F-03.02, F-03.03, F-03.04**

Date **01/ 23/ 2025**

Scale VARIES

Drawing Title: **CAP PLATE**

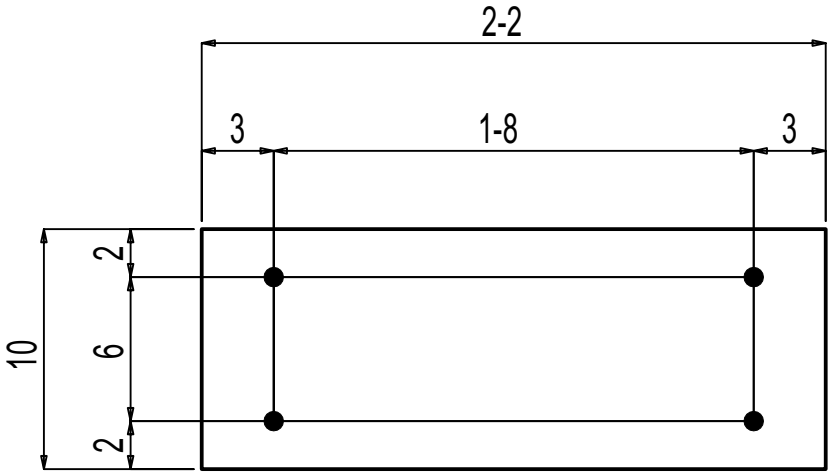

2

8 PL1 1/4x10x2-2 cp1001

GRADE: A36

HOLE: 13/16 Ø (U.N.O)

General Notes

*Structural steel shall conform to ASTM-A992.
*Structural SQR/RND.tubing conform to ASTM A500 Grade C
*Pipe shall conform to ASTM A53, Grade B.
*Channels, Angles and plates shall conform to A36.
*All bolts shall be 3/4" High strength in accordance with ASTM A325 (UNO)
*Welding Electrodes for Carbon steel :E70xx
*Structural members are to be shop primer (U.N.O).
*Surface Preparation-SSPC-SP3 UNO.
*If welds exposed to view, should be ground smooth.

# of Copies	Revision/ Issue	Destination	Date
3	2	REVISED AS NOTED	09-25-2025
2	1	REVISED AS NOTED	09-23-2025
1	0	FOR FABRICATION	09-22-2025

IRON FABRICATION SERVICES, LLC.

3029 M. Street, NW, Suite 202
Washington, DC 20007
Tel: 202-800-5599
Fax: 202-478-0303

Project Name and Address
MARYLAND AVENUE

Location: **1250 MARYLAND AVENUE SW WASHINGTON, DC 20024**

Contractor:
BALFOUR BEATTY

Approved for Fabrication by:	Signature

Contract # **224009** Drawing # **cp1001**

Contract Item: **CAP PLATE**

Ref:
SOW - 03: F-03.01

Date **01/ 23/ 2025**

Scale VARIES

Drawing Title: **CAP PLATE**

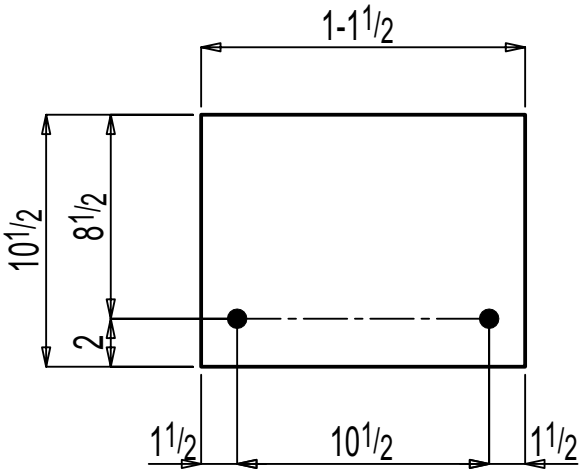

8 PL 3/8x10 1/2x1-1 1/2 pl462

GRADE: A36

HOLE: 13/16 Ø (U.N.O)

General Notes

*Structural steel shall conform to ASTM-A992.
*Structural SQR/RND.tubing conform to ASTM A500 Grade C
*Pipe shall conform to ASTM A53, Grade B.
*Channels, Angles and plates shall conform to A36.
*All bolts shall be 3/4" High strength in accordance with ASTM A325 (UNO)
*Welding Electrodes for Carbon steel :E70xx
*Structural members are to be shop primer (U.N.O).
*Surface Preparation-SSPC-SP3 UNO.
*If welds exposed to view, should be ground smooth.

# of Copies	Revision/ Issue	Destination	Date
1	0	FOR FABRICATION	09-22-2025

IRON FABRICATION SERVICES, LLC.

3029 M. Street, NW, Suite 202
Washington, DC 20007
Tel: 202-800-5599
Fax: 202-478-0303

Project Name and Address
MARYLAND AVENUE

Location: **1250 MARYLAND AVENUE SW WASHINGTON, DC 20024**

Contractor:
BALFOUR BEATTY

Approved for Fabrication by:	Signature

Contract # **224009** Drawing # **pl462**

Contract Item: **PLATE**

Ref:
SOW - 03: F-03.06, F-03.07, F-03.08,

Date **01/ 23/ 2025**

Scale VARIES

Drawing Title: **PLATE**

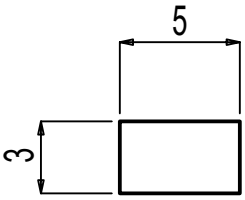

1

13 PL 1/4x3x0-5 pl470

GRADE: A36

General Notes

*Structural steel shall conform to ASTM-A992.
*Structural SQR/RND.tubing conform to ASTM A500 Grade C
*Pipe shall conform to ASTM A53, Grade B.
*Channels, Angles and plates shall conform to A36.
*All bolts shall be 3/4" High strength in accordance with ASTM A325 (UNO)
*Welding Electrodes for Carbon steel :E70xx
*Structural members are to be shop primer (U.N.O).
*Surface Preparation-SSPC-SP3 UNO.
*If welds exposed to view, should be ground smooth.

# of Copies	Revision/ Issue	Destination	Date
2	1	REVISED AS NOTED	09-25-2025
1	0	FOR FABRICATION	09-22-2025

IRON FABRICATION SERVICES, LLC.

3029 M. Street, NW, Suite 202
Washington, DC 20007
Tel: 202-800-5599
Fax: 202-478-0303

Project Name and Address
MARYLAND AVENUE

Location: **1250 MARYLAND AVENUE SW WASHINGTON, DC 20024**

Contractor:
BALFOUR BEATTY

Approved for Fabrication by:	Signature

Contract # **224009** Drawing # **pl470**

Contract Item: **PLATE**

Ref:
SOW - 03: F-03.11

Date **01/ 23/ 2025**

Scale VARIES

Drawing Title:
PLATE

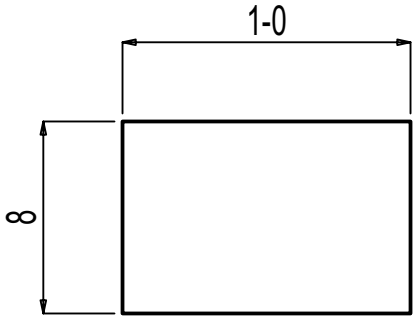

16 PL 1/4x8x1-0 pl472

GRADE: A36

General Notes

*Structural steel shall conform to ASTM-A992.
*Structural SQR/RND.tubing conform to ASTM A500 Grade C
*Pipe shall conform to ASTM A53, Grade B.
*Channels, Angles and plates shall conform to A36.
*All bolts shall be 3/4" High strength in accordance with ASTM A325 (UNO)
*Welding Electrodes for Carbon steel :E70xx
*Structural members are to be shop primer (U.N.O).
*Surface Preparation-SSPC-SP3 UNO.
*If welds exposed to view, should be ground smooth.

# of Copies	Revision/ Issue	Destination	Date
1	0	FOR FABRICATION	09-22-2025

IRON FABRICATION SERVICES, LLC.

3029 M. Street, NW, Suite 202
Washington, DC 20007
Tel: 202-800-5599
Fax: 202-478-0303

Project Name and Address
MARYLAND AVENUE

Location: **1250 MARYLAND AVENUE SW WASHINGTON, DC 20024**

Contractor:
BALFOUR BEATTY

Approved for Fabrication by:	Signature

Contract # **224009** Drawing # **pl472**

Contract Item: **PLATE**

Ref: **SOW - 03: F-03.05, F-03.06, F-03.07, F-03.08, F-03.09**

Date **01/ 23/ 2025**

Scale VARIES

Drawing Title: **PLATE**

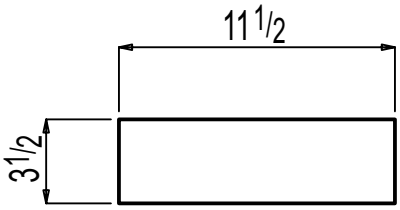

18 PL 1/4x3 1/2x0-11 1/2 pl473

GRADE: A36

General Notes

*Structural steel shall conform to ASTM-A992.
*Structural SQR/RND.tubing conform to ASTM A500 Grade C
*Pipe shall conform to ASTM A53, Grade B.
*Channels, Angles and plates shall conform to A36.
*All bolts shall be 3/4" High strength in accordance with ASTM A325 (UNO)
*Welding Electrodes for Carbon steel :E70xx
*Structural members are to be shop primer (U.N.O).
*Surface Preparation-SSPC-SP3 UNO.
*If welds exposed to view, should be ground smooth.

# of Copies	Revision/ Issue	Destination	Date
1	0	FOR FABRICATION	09-22-2025

IRON FABRICATION SERVICES, LLC.

3029 M. Street, NW, Suite 202
Washington, DC 20007
Tel: 202-800-5599
Fax: 202-478-0303

Project Name and Address
MARYLAND AVENUE

Location: **1250 MARYLAND AVENUE SW WASHINGTON, DC 20024**

Contractor:
BALFOUR BEATTY

Approved for Fabrication by:	Signature

Contract # **224009** Drawing # **pl473**

Contract Item: **PLATE**

Ref: **SOW - 03: F-03.05, F-03.06, F-03.07, F-03.08, F-03.09**

Date **01/ 23/ 2025**

Scale VARIES

Drawing Title: **PLATE**

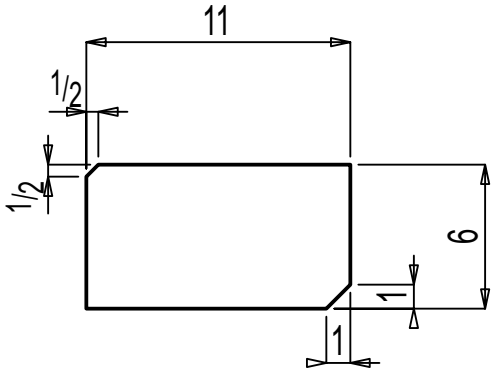

14 PL 1/2x6x0-11 pl658

GRADE: A36

General Notes

*Structural steel shall conform to ASTM-A992.
*Structural SQR/RND.tubing conform to ASTM A500 Grade C
*Pipe shall conform to ASTM A53, Grade B.
*Channels, Angles and plates shall conform to A36.
*All bolts shall be 3/4" High strength in accordance with ASTM A325 (UNO)
*Welding Electrodes for Carbon steel :E70xx
*Structural members are to be shop primer (U.N.O).
*Surface Preparation-SSPC-SP3 UNO.
*If welds exposed to view, should be ground smooth.

# of Copies	Revision/ Issue	Destination	Date
1	0	FOR FABRICATION	09-22-2025

IRON FABRICATION SERVICES, LLC.

3029 M. Street, NW, Suite 202
Washington, DC 20007
Tel: 202-800-5599
Fax: 202-478-0303

Project Name and Address
MARYLAND AVENUE

Location: **1250 MARYLAND AVENUE SW WASHINGTON, DC 20024**

Contractor:
BALFOUR BEATTY

Approved for Fabrication by:	Signature

Contract # **224009** Drawing # **pl658**

Contract Item: **PLATE**

Ref:
SOW - 03: F-03.11, F-03.12

Date **01/ 23/ 2025**

Scale VARIES

Drawing Title: **PLATE**

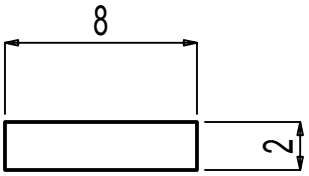

8 PL 1/4x2x0-8 pl665

GRADE: A36

General Notes

*Structural steel shall conform to ASTM-A992.
*Structural SQR/RND.tubing conform to ASTM A500 Grade C
*Pipe shall conform to ASTM A53, Grade B.
*Channels, Angles and plates shall conform to A36.
*All bolts shall be 3/4" High strength in accordance with ASTM A325 (UNO)
*Welding Electrodes for Carbon steel :E70xx
*Structural members are to be shop primer (U.N.O).
*Surface Preparation-SSPC-SP3 UNO.
*If welds exposed to view, should be ground smooth.

# of Copies	Revision/ Issue	Destination	Date
1	0	FOR FABRICATION	09-22-2025

IRON FABRICATION SERVICES, LLC.

3029 M. Street, NW, Suite 202
Washington, DC 20007
Tel: 202-800-5599
Fax: 202-478-0303

Project Name and Address
MARYLAND AVENUE

Location: **1250 MARYLAND AVENUE SW WASHINGTON, DC 20024**

Contractor:
BALFOUR BEATTY

Approved for Fabrication by:	Signature

Contract # **224009** Drawing # **pl665**

Contract Item: **PLATE**

Ref: **SOW - 03: F-03.05, F-03.07, F-03.08, F-03.09**

Date **01/ 23/ 2025**

Scale VARIES

Drawing Title: **PLATE**

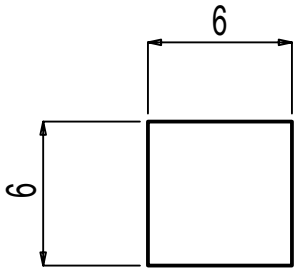

ONE PL 1/4x6x0-6 pl680

GRADE: A36

General Notes

*Structural steel shall conform to ASTM-A992.
*Structural SQR/RND.tubing conform to ASTM A500 Grade C
*Pipe shall conform to ASTM A53, Grade B.
*Channels, Angles and plates shall conform to A36.
*All bolts shall be 3/4" High strength in accordance with ASTM A325 (UNO)
*Welding Electrodes for Carbon steel :E70xx
*Structural members are to be shop primer (U.N.O).
*Surface Preparation-SSPC-SP3 UNO.
*If welds exposed to view, should be ground smooth.

# of Copies	Revision/ Issue	Destination	Date
1	0	FOR FABRICATION	09-22-2025

IRON FABRICATION SERVICES, LLC.

3029 M. Street, NW, Suite 202
Washington, DC 20007
Tel: 202-800-5599
Fax: 202-478-0303

Project Name and Address
MARYLAND AVENUE

Location: **1250 MARYLAND AVENUE SW WASHINGTON, DC 20024**

Contractor:
BALFOUR BEATTY

Approved for Fabrication by:	Signature

Contract # **224009** Drawing # **pl680**

Contract Item: **PLATE**

Ref:
SOW - 03: F-03.09

Date **01/ 23/ 2025**

Scale VARIES

Drawing Title: **PLATE**

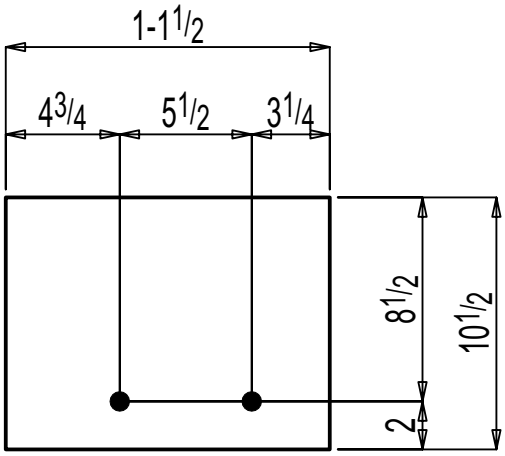

ONE PL 3/8x10 1/2x1-1 1/2 pl1517

GRADE: A36

HOLE: 13/16 Ø (U.N.O)

General Notes

*Structural steel shall conform to ASTM-A992.
*Structural SQR/RND.tubing conform to ASTM A500 Grade C
*Pipe shall conform to ASTM A53, Grade B.
*Channels, Angles and plates shall conform to A36.
*All bolts shall be 3/4" High strength in accordance with ASTM A325 (UNO)
*Welding Electrodes for Carbon steel :E70xx
*Structural members are to be shop primer (U.N.O).
*Surface Preparation-SSPC-SP3 UNO.
*If welds exposed to view, should be ground smooth.

# of Copies	Revision/ Issue	Destination	Date
1	0	FOR FABRICATION	09-22-2025

IRON FABRICATION SERVICES, LLC.

3029 M. Street, NW, Suite 202
Washington, DC 20007
Tel: 202-800-5599
Fax: 202-478-0303

Project Name and Address
MARYLAND AVENUE

Location: **1250 MARYLAND AVENUE SW WASHINGTON, DC 20024**

Contractor:
BALFOUR BEATTY

Approved for Fabrication by:	Signature

Contract # **224009** Drawing # **pl1517**

Contract Item: **PLATE**

Ref:
SOW - 03: F-03.05

Date **01/ 23/ 2025**

Scale VARIES

Drawing Title: **PLATE**

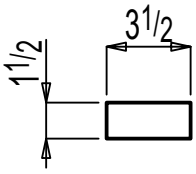

2 PL 1/4x1 1/2x0-3 1/2 pl1550

GRADE: A36

General Notes

*Structural steel shall conform to ASTM-A992.
*Structural SQR/RND.tubing conform to ASTM A500 Grade C
*Pipe shall conform to ASTM A53, Grade B.
*Channels, Angles and plates shall conform to A36.
*All bolts shall be 3/4" High strength in accordance with ASTM A325 (UNO)
*Welding Electrodes for Carbon steel :E70xx
*Structural members are to be shop primer (U.N.O).
*Surface Preparation-SSPC-SP3 UNO.
*If welds exposed to view, should be ground smooth.

# of Copies	Revision/ Issue	Destination	Date
1	0	FOR FABRICATION	09-22-2025

IRON FABRICATION SERVICES, LLC.

3029 M. Street, NW, Suite 202
Washington, DC 20007
Tel: 202-800-5599
Fax: 202-478-0303

Project Name and Address
MARYLAND AVENUE

Location: **1250 MARYLAND AVENUE SW WASHINGTON, DC 20024**

Contractor:
BALFOUR BEATTY

Approved for Fabrication by:	Signature

Contract # **224009** Drawing # **pl1550**

Contract Item: **PLATE**

Ref:
SOW - 03: F-03.11

Date **01/ 23/ 2025**

Scale VARIES

Drawing Title:
PLATE

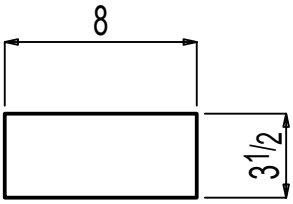

2 PL 1/4x3 1/2x0-8 pl1608

GRADE: A36

General Notes

*Structural steel shall conform to ASTM-A992.
*Structural SQR/RND.tubing conform to ASTM A500 Grade C
*Pipe shall conform to ASTM A53, Grade B.
*Channels, Angles and plates shall conform to A36.
*All bolts shall be 3/4" High strength in accordance with ASTM A325 (UNO)
*Welding Electrodes for Carbon steel :E70xx
*Structural members are to be shop primer (U.N.O).
*Surface Preparation-SSPC-SP3 UNO.
*If welds exposed to view, should be ground smooth.

# of Copies	Revision/ Issue	Destination	Date
1	0	FOR FABRICATION	09-22-2025

IRON FABRICATION SERVICES, LLC.

3029 M. Street, NW, Suite 202
Washington, DC 20007
Tel: 202-800-5599
Fax: 202-478-0303

Project Name and Address
MARYLAND AVENUE

Location: **1250 MARYLAND AVENUE SW WASHINGTON, DC 20024**

Contractor:
BALFOUR BEATTY

Approved for Fabrication by:	Signature

Contract # **224009** Drawing # **pl1608**

Contract Item: **PLATE**

Ref:
SOW - 03: F-03.11

Date **01/ 23/ 2025**

Scale VARIES

Drawing Title:
PLATE

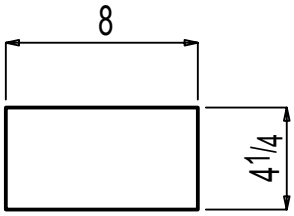

1

7 PL 1/4x4 1/4x0-8 pl2938

GRADE: A36

General Notes

*Structural steel shall conform to ASTM-A992.
*Structural SQR/RND.tubing conform to ASTM A500 Grade C
*Pipe shall conform to ASTM A53, Grade B.
*Channels, Angles and plates shall conform to A36.
*All bolts shall be 3/4" High strength in accordance with ASTM A325 (UNO)
*Welding Electrodes for Carbon steel :E70xx
*Structural members are to be shop primer (U.N.O).
*Surface Preparation-SSPC-SP3 UNO.
*If welds exposed to view, should be ground smooth.

# of Copies	Revision/ Issue	Destination	Date
2	1	REVISED AS NOTED	09-25-2025
1	0	FOR FABRICATION	09-22-2025

IRON FABRICATION SERVICES, LLC.

3029 M. Street, NW, Suite 202
Washington, DC 20007
Tel: 202-800-5599
Fax: 202-478-0303

Project Name and Address
MARYLAND AVENUE

Location: **1250 MARYLAND AVENUE SW WASHINGTON, DC 20024**

Contractor:
BALFOUR BEATTY

Approved for Fabrication by:	Signature

Contract # **224009** Drawing # **pl2938**

Contract Item: **PLATE**

Ref: **SOW - 03: F-03.05, F-03.07, F-03.08, F-03.09**

Date **01/ 23/ 2025**

Scale VARIES

Drawing Title: **PLATE**

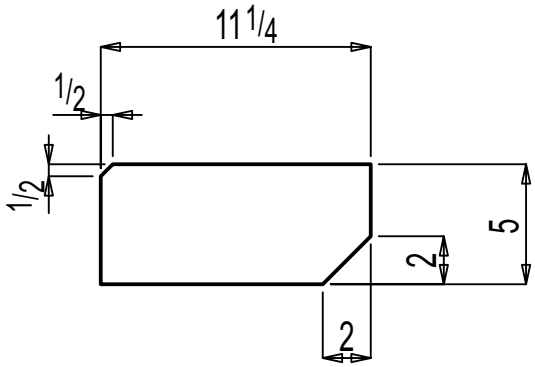

7 PL 1/2x5x0-11 1/4 pl3056

GRADE: A36

General Notes

*Structural steel shall conform to ASTM-A992.
*Structural SQR/RND.tubing conform to ASTM A500 Grade C
*Pipe shall conform to ASTM A53, Grade B.
*Channels, Angles and plates shall conform to A36.
*All bolts shall be 3/4" High strength in accordance with ASTM A325 (UNO)
*Welding Electrodes for Carbon steel :E70xx
*Structural members are to be shop primer (U.N.O).
*Surface Preparation-SSPC-SP3 UNO.
*If welds exposed to view, should be ground smooth.

# of Copies	Revision/ Issue	Destination	Date
1	0	FOR FABRICATION	09-22-2025

IRON FABRICATION SERVICES, LLC.

3029 M. Street, NW, Suite 202
Washington, DC 20007
Tel: 202-800-5599
Fax: 202-478-0303

Project Name and Address
MARYLAND AVENUE

Location: **1250 MARYLAND AVENUE SW WASHINGTON, DC 20024**

Contractor:
BALFOUR BEATTY

Approved for Fabrication by:	Signature

Contract # **224009** Drawing # **pl3056**

Contract Item: **PLATE**

Ref:
SOW - 03: F-03.11

Date **01/ 23/ 2025**

Scale VARIES

Drawing Title: **PLATE**

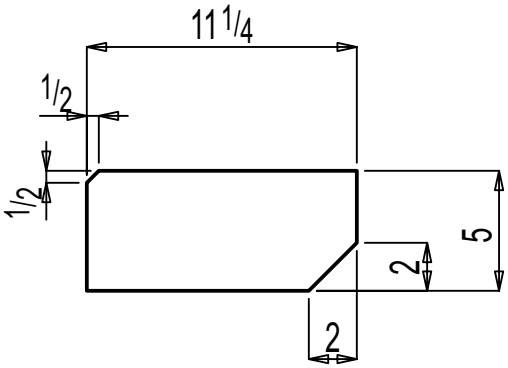

14 PL 3/8x5x0-11 1/4 pl3057

GRADE: A36

General Notes

*Structural steel shall conform to ASTM-A992.
*Structural SQR/RND.tubing conform to ASTM A500 Grade C
*Pipe shall conform to ASTM A53, Grade B.
*Channels, Angles and plates shall conform to A36.
*All bolts shall be 3/4" High strength in accordance with ASTM A325 (UNO)
*Welding Electrodes for Carbon steel :E70xx
*Structural members are to be shop primer (U.N.O).
*Surface Preparation-SSPC-SP3 UNO.
*If welds exposed to view, should be ground smooth.

# of Copies	Revision/ Issue	Destination	Date
1	0	FOR FABRICATION	09-22-2025

IRON FABRICATION SERVICES, LLC.

3029 M. Street, NW, Suite 202
Washington, DC 20007
Tel: 202-800-5599
Fax: 202-478-0303

Project Name and Address
MARYLAND AVENUE

Location: **1250 MARYLAND AVENUE SW WASHINGTON, DC 20024**

Contractor:
BALFOUR BEATTY

Approved for Fabrication by:	Signature

Contract # **224009** Drawing # **pl3057**

Contract Item: **PLATE**

Ref:
SOW - 03: F-03.11

Date **01/ 23/ 2025**

Scale VARIES

Drawing Title: **PLATE**

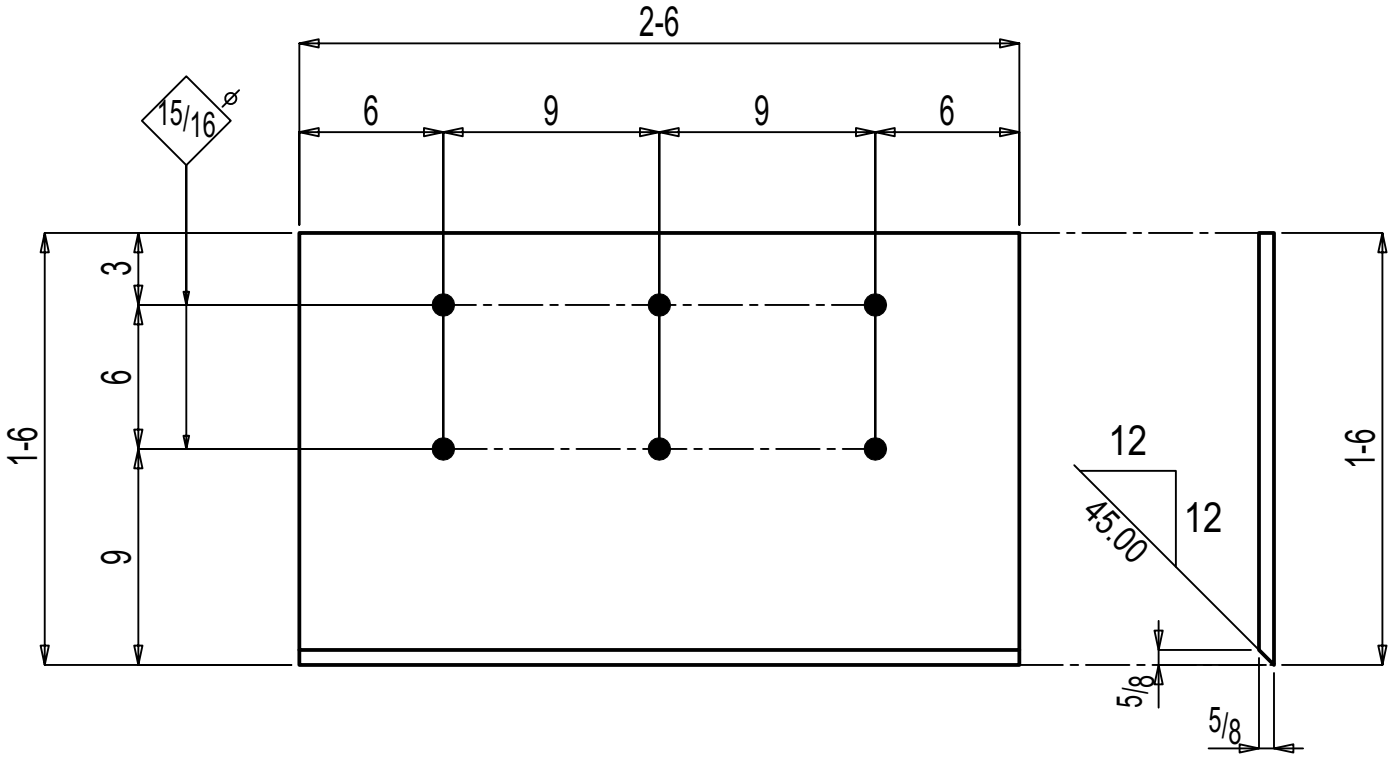

4 PL 5/8x18x2-6 pl3732

GRADE: A36

HOLE: 13/16 Ø (U.N.O)

General Notes

*Structural steel shall conform to ASTM-A992.
*Structural SQR/RND.tubing conform to ASTM A500 Grade C
*Pipe shall conform to ASTM A53, Grade B.
*Channels, Angles and plates shall conform to A36.
*All bolts shall be 3/4" High strength in accordance with ASTM A325 (UNO)
*Welding Electrodes for Carbon steel :E70xx
*Structural members are to be shop primer (U.N.O).
*Surface Preparation-SSPC-SP3 UNO.
*If welds exposed to view, should be ground smooth.

# of Copies	Revision/ Issue	Destination	Date
1	0	FOR FABRICATION	09-22-2025

IRON FABRICATION SERVICES, LLC.

3029 M. Street, NW, Suite 202
Washington, DC 20007
Tel: 202-800-5599
Fax: 202-478-0303

Project Name and Address
MARYLAND AVENUE

Location: **1250 MARYLAND AVENUE SW WASHINGTON, DC 20024**

Contractor:
BALFOUR BEATTY

Approved for Fabrication by:	Signature

Contract # **224009** Drawing # **pl3732**

Contract Item: **PLATE**

Ref:
SOW - 03: F-03.00

Date **01/ 23/ 2025**

Scale VARIES

Drawing Title: **PLATE**

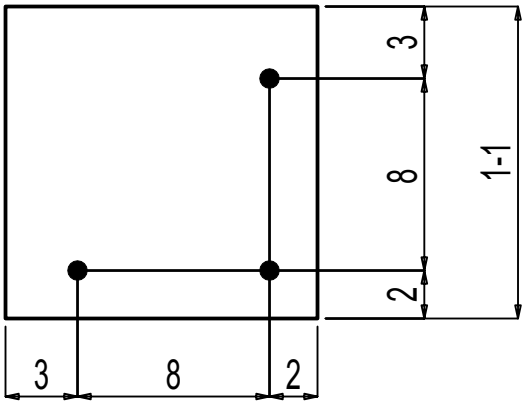

1

7 PL1 1/4x13x1-1 pl3738

GRADE: A36

HOLE: 13/16 Ø (U.N.O)

General Notes

*Structural steel shall conform to ASTM-A992.
*Structural SQR/RND.tubing conform to ASTM A500 Grade C
*Pipe shall conform to ASTM A53, Grade B.
*Channels, Angles and plates shall conform to A36.
*All bolts shall be 3/4" High strength in accordance with ASTM A325 (UNO)
*Welding Electrodes for Carbon steel :E70xx
*Structural members are to be shop primer (U.N.O).
*Surface Preparation-SSPC-SP3 UNO.
*If welds exposed to view, should be ground smooth.

# of Copies	Revision/ Issue	Destination	Date
2	1	REVISED AS NOTED	09-25-2025
1	0	FOR FABRICATION	09-22-2025

IRON FABRICATION SERVICES, LLC.

3029 M. Street, NW, Suite 202
Washington, DC 20007
Tel: 202-800-5599
Fax: 202-478-0303

Project Name and Address
MARYLAND AVENUE

Location: **1250 MARYLAND AVENUE SW WASHINGTON, DC 20024**

Contractor:
BALFOUR BEATTY

Approved for Fabrication by:	Signature

Contract # **224009** Drawing # **pl3738**

Contract Item: **PLATE**

Ref: **SOW - 03: F-03.02, F-03.03, F-03.04, F-03.05**

Date **01/ 23/ 2025**

Scale VARIES

Drawing Title: **PLATE**

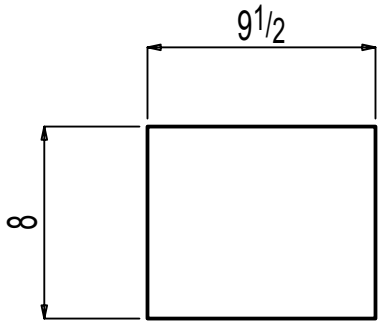

8 PL 1/4x8x0-9 1/2 pl3739

GRADE: A36

General Notes

*Structural steel shall conform to ASTM-A992.
*Structural SQR/RND.tubing conform to ASTM A500 Grade C
*Pipe shall conform to ASTM A53, Grade B.
*Channels, Angles and plates shall conform to A36.
*All bolts shall be 3/4" High strength in accordance with ASTM A325 (UNO)
*Welding Electrodes for Carbon steel :E70xx
*Structural members are to be shop primer (U.N.O).
*Surface Preparation-SSPC-SP3 UNO.
*If welds exposed to view, should be ground smooth.

# of Copies	Revision/ Issue	Destination	Date
1	0	FOR FABRICATION	09-22-2025

IRON FABRICATION SERVICES, LLC.

3029 M. Street, NW, Suite 202
Washington, DC 20007
Tel: 202-800-5599
Fax: 202-478-0303

Project Name and Address
MARYLAND AVENUE

Location: **1250 MARYLAND AVENUE SW WASHINGTON, DC 20024**

Contractor:
BALFOUR BEATTY

Approved for Fabrication by:	Signature

Contract # **224009** Drawing # **pl3739**

Contract Item: **PLATE**

Ref: **SOW - 03: F-03.05, F-03.07, F-03.08, F-03.09**

Date **01/ 23/ 2025**

Scale VARIES

Drawing Title: **PLATE**

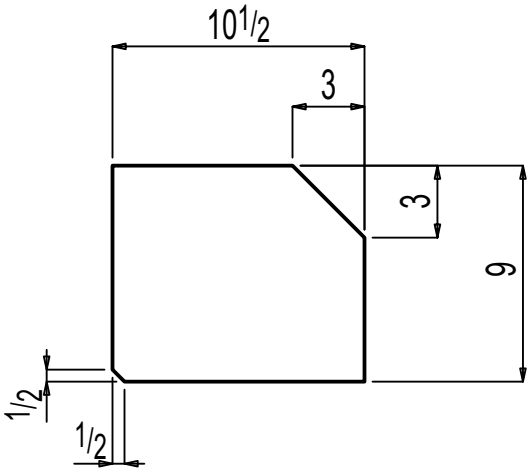

ONE PL 1/2x9x0-10 1/2 pl3740

GRADE: A36

General Notes

*Structural steel shall conform to ASTM-A992.
*Structural SQR/RND.tubing conform to ASTM A500 Grade C
*Pipe shall conform to ASTM A53, Grade B.
*Channels, Angles and plates shall conform to A36.
*All bolts shall be 3/4" High strength in accordance with ASTM A325 (UNO)
*Welding Electrodes for Carbon steel :E70xx
*Structural members are to be shop primer (U.N.O).
*Surface Preparation-SSPC-SP3 UNO.
*If welds exposed to view, should be ground smooth.

# of Copies	Revision/ Issue	Destination	Date
1	0	FOR FABRICATION	09-22-2025

IRON FABRICATION SERVICES, LLC.

3029 M. Street, NW, Suite 202
Washington, DC 20007
Tel: 202-800-5599
Fax: 202-478-0303

Project Name and Address
MARYLAND AVENUE

Location: **1250 MARYLAND AVENUE SW WASHINGTON, DC 20024**

Contractor:
BALFOUR BEATTY

Approved for Fabrication by:	Signature

Contract # **224009** Drawing # **pl3740**

Contract Item: **PLATE**

Ref:
SOW - 03: F-03.11

Date **01/ 23/ 2025**

Scale VARIES

Drawing Title: **PLATE**

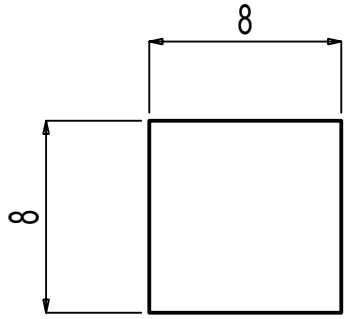

ONE PL 1/2x8x0-8 pl3742

GRADE: A36

General Notes

*Structural steel shall conform to ASTM-A992.
*Structural SQR/RND.tubing conform to ASTM A500 Grade C
*Pipe shall conform to ASTM A53, Grade B.
*Channels, Angles and plates shall conform to A36.
*All bolts shall be 3/4" High strength in accordance with ASTM A325 (UNO)
*Welding Electrodes for Carbon steel :E70xx
*Structural members are to be shop primer (U.N.O).
*Surface Preparation-SSPC-SP3 UNO.
*If welds exposed to view, should be ground smooth.

# of Copies	Revision/ Issue	Destination	Date
1	0	FOR FABRICATION	09-22-2025

IRON FABRICATION SERVICES, LLC.

3029 M. Street, NW, Suite 202
Washington, DC 20007
Tel: 202-800-5599
Fax: 202-478-0303

Project Name and Address
MARYLAND AVENUE

Location: **1250 MARYLAND AVENUE SW WASHINGTON, DC 20024**

Contractor:
BALFOUR BEATTY

Approved for Fabrication by:	Signature

Contract # **224009** Drawing # **pl3742**

Contract Item: **PLATE**

Ref:
SOW - 03: F-03.12

Date **01/ 23/ 2025**

Scale VARIES

Drawing Title: **PLATE**

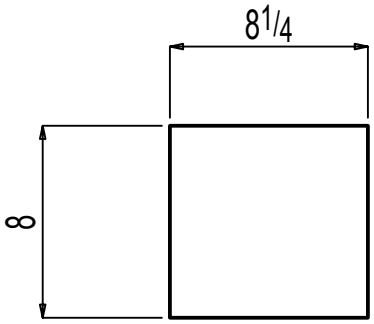

ONE PL 1/4x8x0-8 1/4 pl3749

GRADE: A36

General Notes

*Structural steel shall conform to ASTM-A992.
*Structural SQR/RND.tubing conform to ASTM A500 Grade C
*Pipe shall conform to ASTM A53, Grade B.
*Channels, Angles and plates shall conform to A36.
*All bolts shall be 3/4" High strength in accordance with ASTM A325 (UNO)
*Welding Electrodes for Carbon steel :E70xx
*Structural members are to be shop primer (U.N.O).
*Surface Preparation-SSPC-SP3 UNO.
*If welds exposed to view, should be ground smooth.

# of Copies	Revision/ Issue	Destination	Date
1	0	FOR FABRICATION	09-25-2025

IRON FABRICATION SERVICES, LLC.

3029 M. Street, NW, Suite 202
Washington, DC 20007
Tel: 202-800-5599
Fax: 202-478-0303

Project Name and Address
MARYLAND AVENUE

Location: **1250 MARYLAND AVENUE SW WASHINGTON, DC 20024**

Contractor:
BALFOUR BEATTY

Approved for Fabrication by:	Signature

Contract # **224009** Drawing # **pl3749**

Contract Item: **PLATE**

Ref:
SOW - 03: F-03.12

Date **01/ 23/ 2025**

Scale VARIES

Drawing Title: **PLATE**