GCP Wiring

220 VAC 50/60 Hz
PCB v3
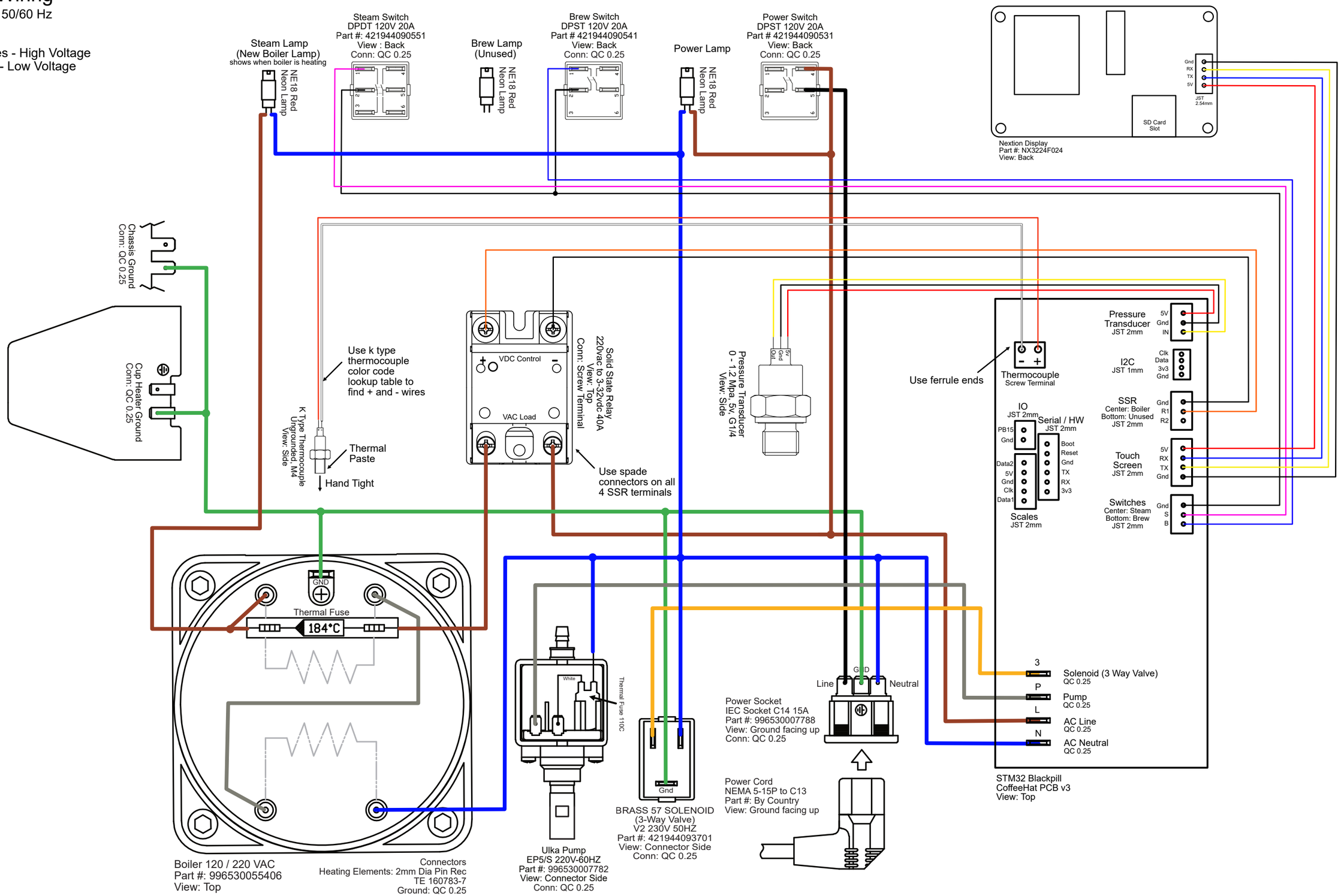
Thick lines - High Voltage
Thin line - Low Voltage