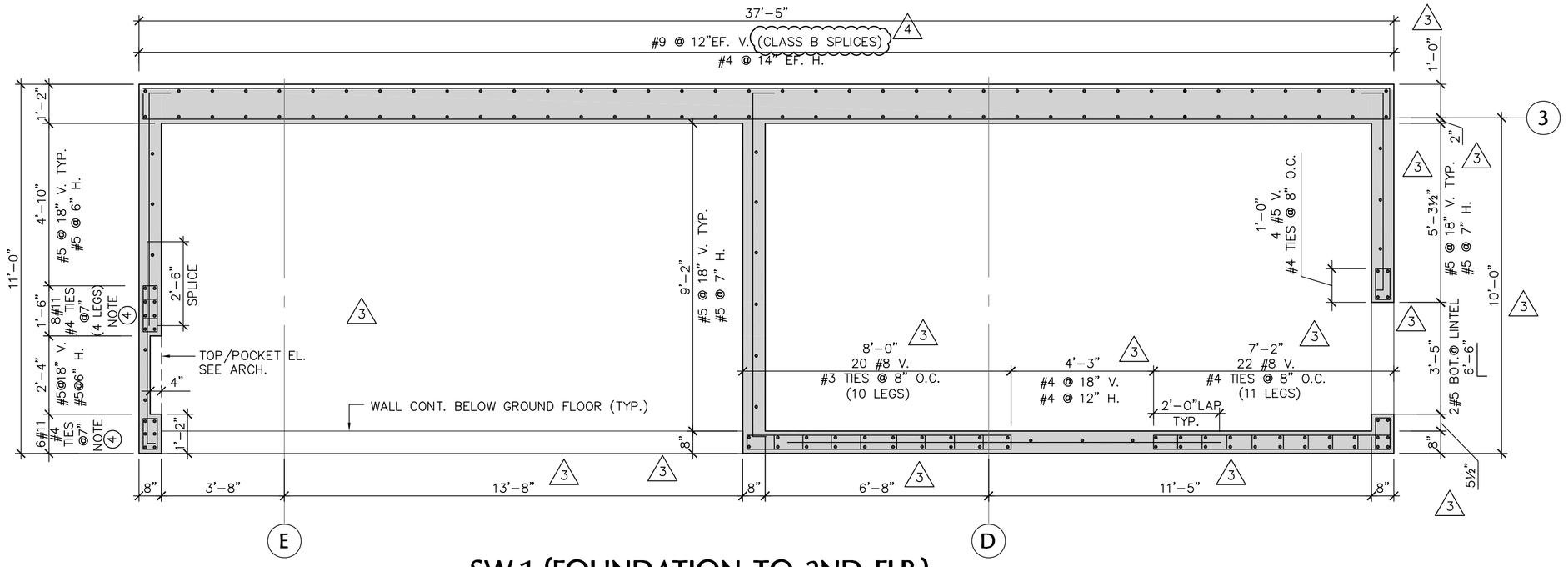

SW-1 (FOUNDATION TO 2ND FLR.)

SC: 3/8" = 1'-0"

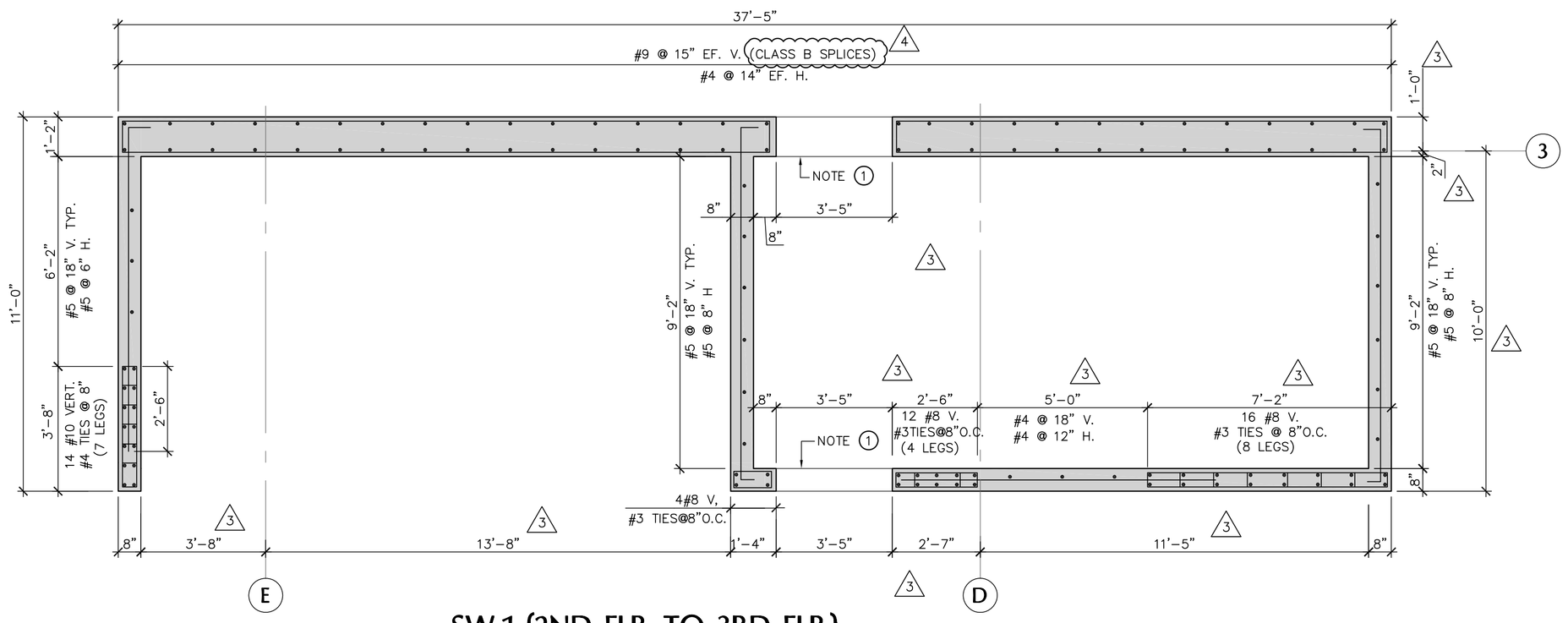

SW-1 (2ND FLR. TO 3RD FLR.)

SC: 3/8" = 1'-0"

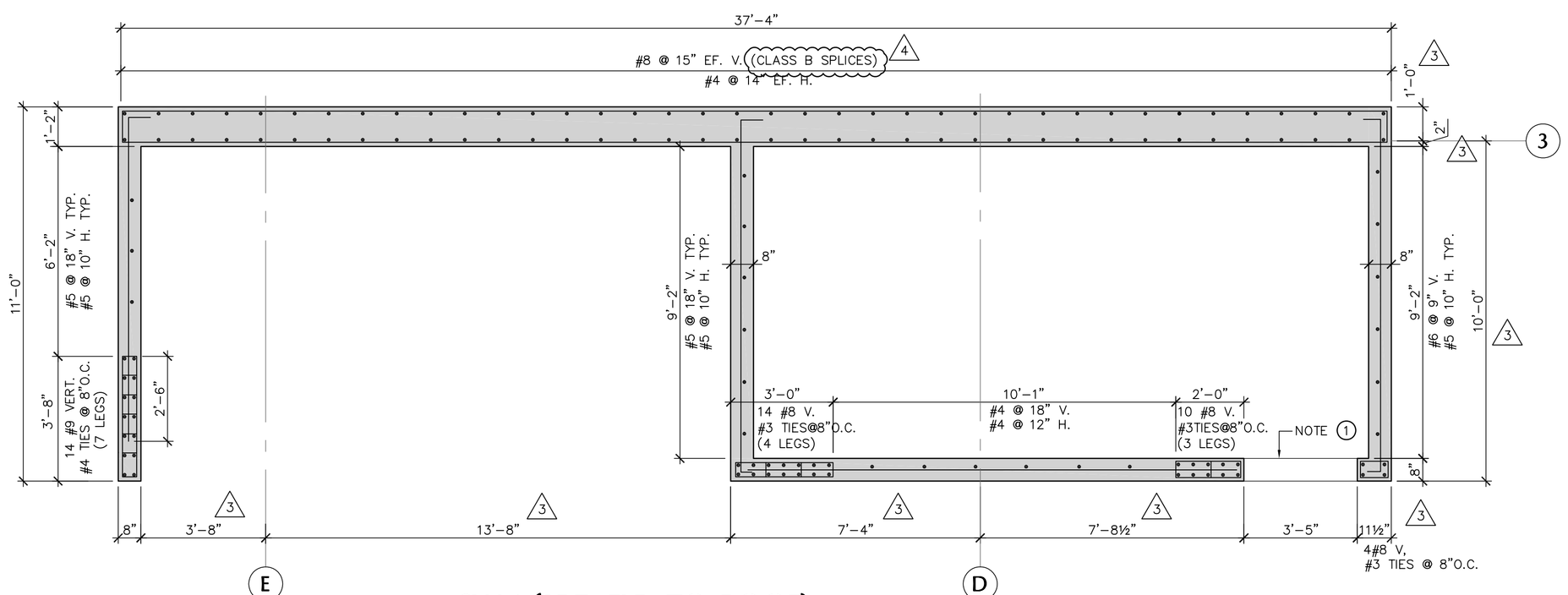

SW-1 (3RD FLR. TO ROOF)

SC: 3/8" = 1'-0"

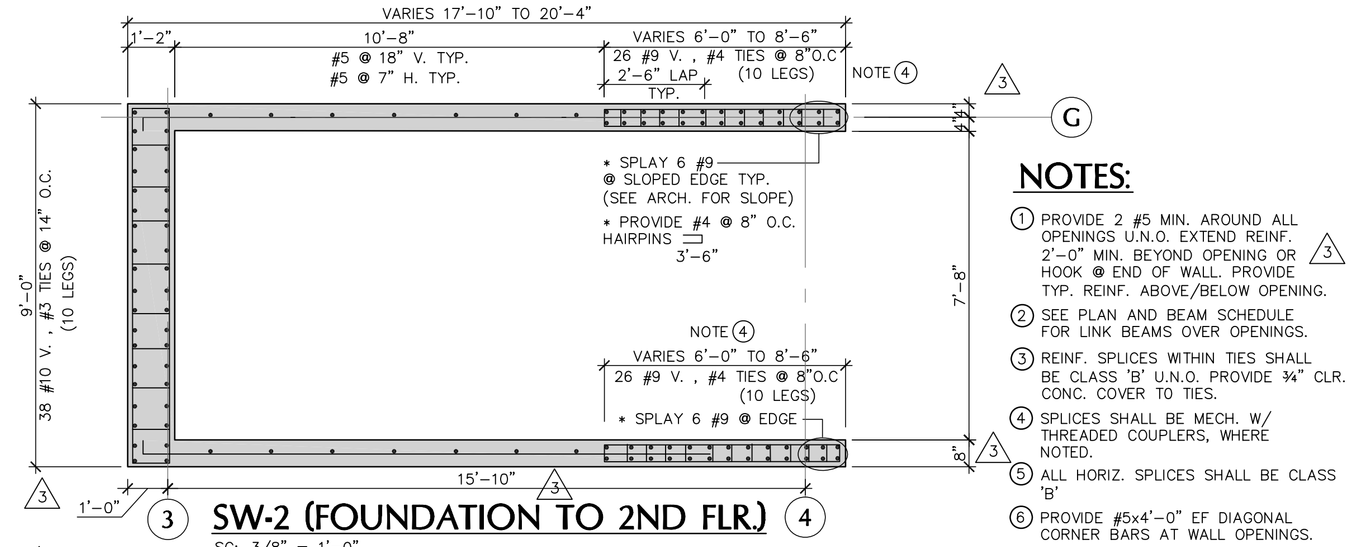

SW-2 (FOUNDATION TO 2ND FLR.)

SC: 3/8" = 1'-0"

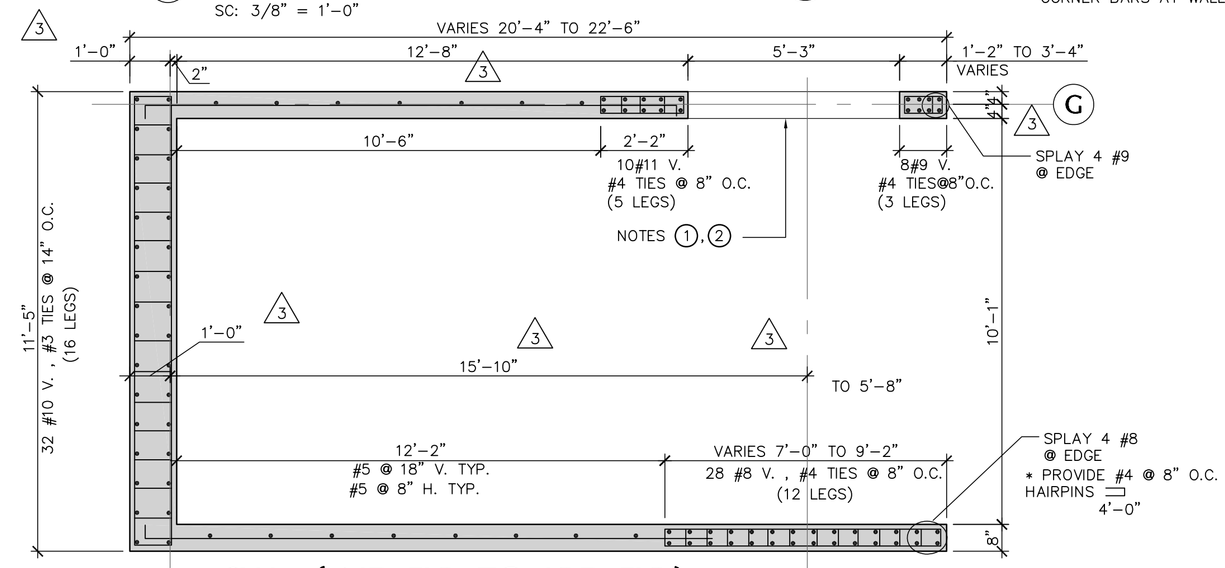

SW-2 (2ND FLR. TO 3RD FLR.)

SC: 3/8" = 1'-0"

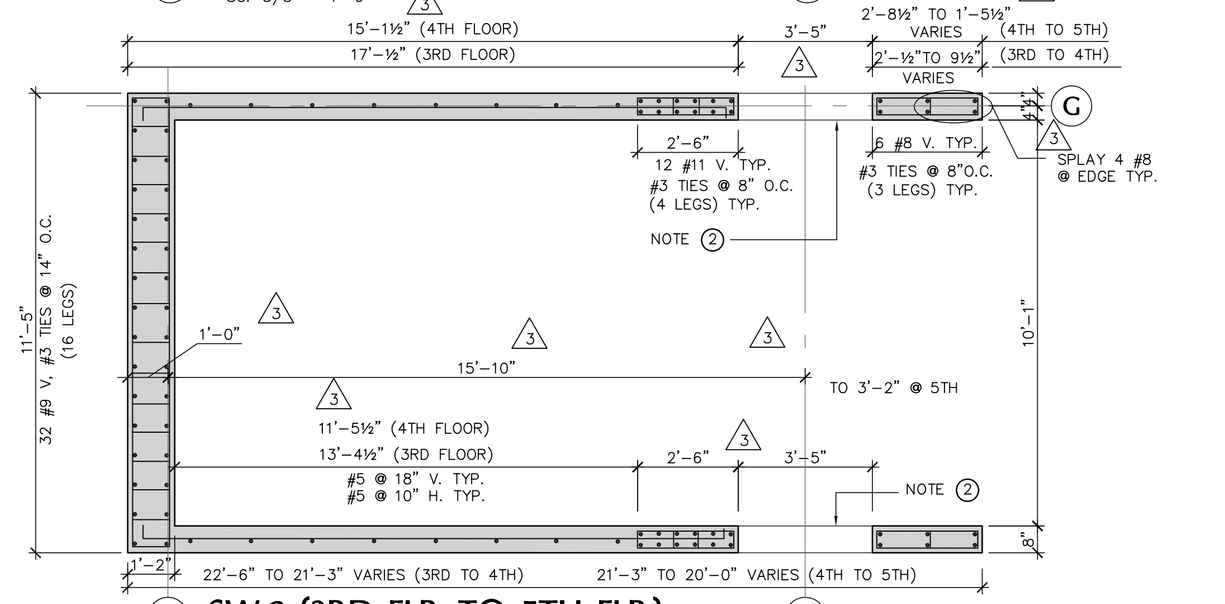

SW-2 (3RD FLR. TO 5TH FLR.)

SC: 3/8" = 1'-0"

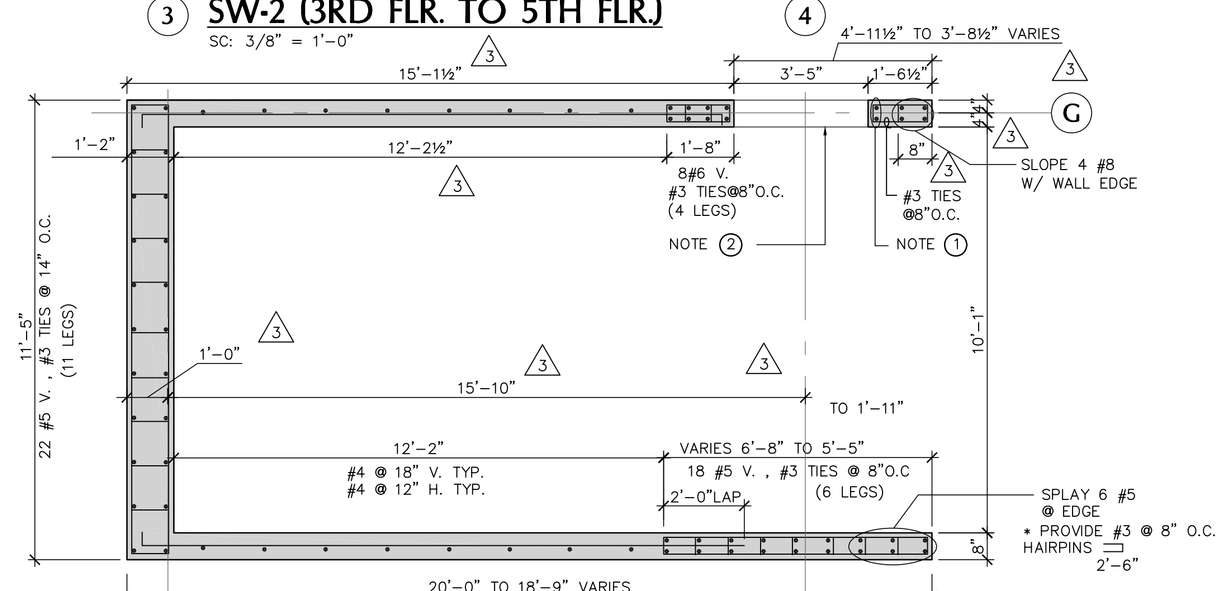

SW-2 (5TH FLR TO ROOF.)

SC: 3/8" = 1'-0"

NOTES:

1. PROVIDE 2 #5 MIN. AROUND ALL OPENINGS U.N.O. EXTEND REINF. 2'-0" MIN. BEYOND OPENING OR HOOK @ END OF WALL. PROVIDE TYP. REINF. ABOVE/BELOW OPENING.
2. SEE PLAN AND BEAM SCHEDULE FOR LINK BEAMS OVER OPENINGS.
3. REINF. SPLICES WITHIN TIES SHALL BE CLASS 'B' U.N.O. PROVIDE ¾" CLR. CONC. COVER TO TIES.
4. SPLICES SHALL BE MECH. W/ THREADED COUPLERS, WHERE NOTED.
5. ALL HORIZ. SPLICES SHALL BE CLASS 'B'
6. PROVIDE #5x4'-0" EF DIAGONAL CORNER BARS AT WALL OPENINGS.

SCHOOL OF INTERNATIONAL AND PUBLIC AFFAIRS
BT-835
MIAMI, FLORIDA

FLORIDA INTERNATIONAL UNIVERSITY
MIAMI, FLORIDA

ARCHITECT OF RECORD

ARQUITECTONICA
801 Brickell Ave, Suite 1100
Miami, Florida 33131
T 305.372.1812
F 305.372.1175
www.arquitectonica.com

STRUCTURAL ENGINEER:
PISTORINO & ALAM
7171 S.W. 62nd Ave, 4th FL
MIAMI, FL 33143
305.669.2700
305.669.2165

M.E.P. ENGINEER:
MEP ENGINEERING, INC
10590 N.W. 27th Street, SUITE 101
MIAMI, FL 33172
305.471.0160
305.593.2530

LANDSCAPE ARCHITECT
ARQUITECTONICAGEO
801 BRICKELL AVE, SUITE 1100
MIAMI, FL 33131
305.372.1812
305.372.1175

CIVIL ENGINEER:
TERRA CIVIL ENGINEERING
7855 NW 12 STREET, SUITE 202
DORAL, FL 33126
305.499.5010
786.664.6500

CONSULTANT:
NUTTING ENGINEERS
1310 NEPTUNE DRIVE
BOYTON BEACH, FL 33246
561.736.4900
561.737.9975

CONSULTANT:
WAVEGUIDE
8270 WOODLAND CENTER BLVD.
TAMPA, FLORIDA 33614
813-739-8998
813-769-3516

SEAL / SIGNATURE / DATE

JASON TAYLOR
FL. P.E. # 60277
P. & A. PROJECT No. 07-179

REVISION 02 - AUGUST 14 2009

OFFICE REGISTRATION #: AA C000465

Date	Revision
10-28-09	REVISION 03
11-06-09	REVISION 04

Issue #	Issue Date / For
7.24.07	SCHEMATIC DESIGN APPROVAL
11.12.07	SCHEMATIC DESIGN APPROVAL
02.22.08	SCHEMATIC DESIGN APPROVAL
03.28.08	SCHEMATIC DESIGN APPROVAL
10.21.08	PROGRESS DESIGN DEVELOPMENT
11.26.08	100 % DESIGN DEVELOPMENT
02.25.09	FOUNDATION PERMIT
03.18.09	50% CONSTRUCTION DOCUMENTS
05.18.09	100% CONSTRUCTION DOCUMENTS

PROJECT NO.: 2441

SHEET INDEX
SHEARWALL DETAILS
AS SHOWN

S2.03

© 2009 ARQUITECTONICA INTERNATIONAL, INC.

S2.03