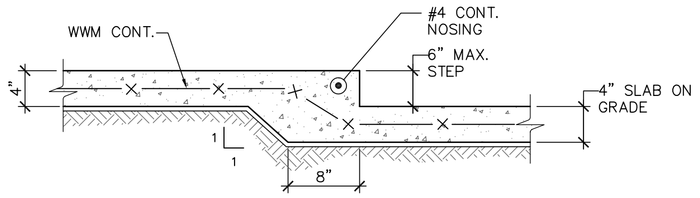

TYPICAL DETAIL : SLAB STEP ON GRADE (A / S2.00)

SC: 1" = 1'-0"

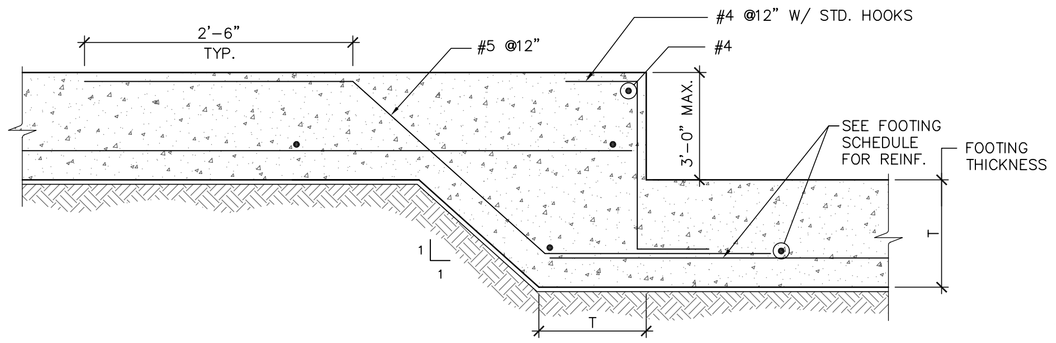

TYPICAL DETAIL : STEP FOOTING (B / S2.00)

SC: 1" = 1'-0"

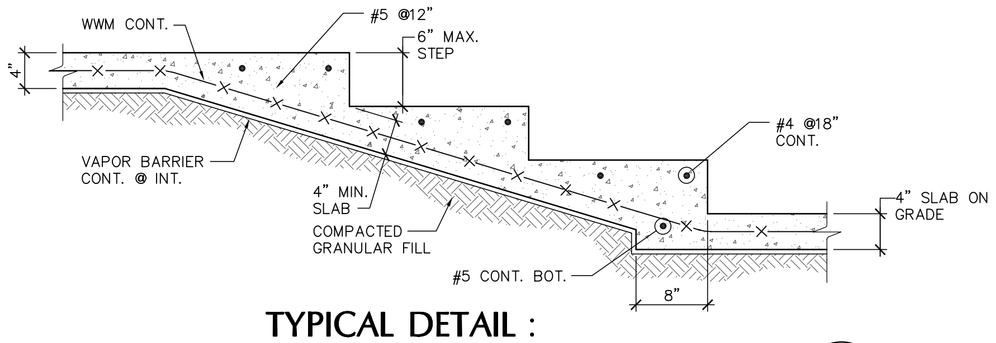

TYPICAL DETAIL : CONC. STEPS ON GRADE (C / S2.00)

SC: 1" = 1'-0"

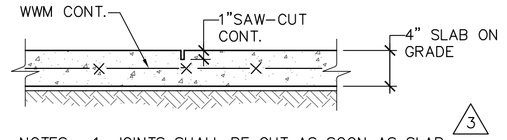

NOTES: 1. JOINTS SHALL BE CUT AS SOON AS SLAB CAN BEAR FOOT TRAFFIC.
2. 15'-0" MAX. JOINT SPACING

TYPICAL DETAIL : CONTROL JOINT (D / S2.00)

SC: 1" = 1'-0"

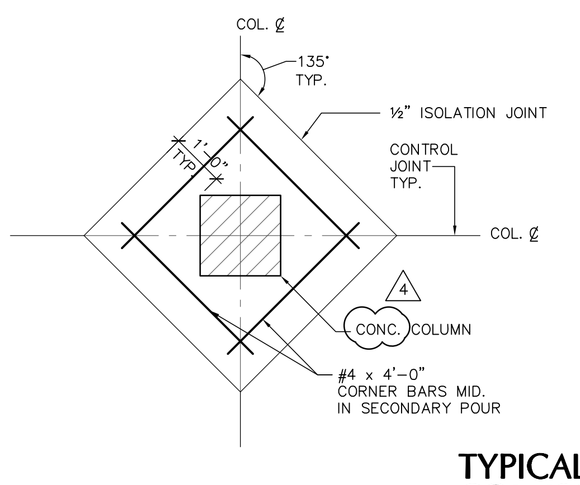

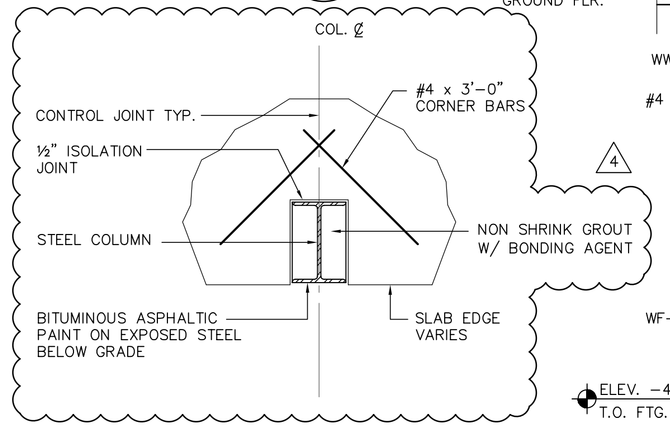

TYPICAL DETAILS. COL. ISOLATION @ S.O.G. (E / S2.00)

SC: 1/2" = 1'-0"

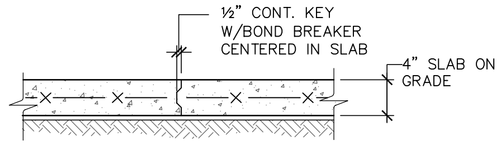

TYPICAL DETAIL : CONSTRUCTION JOINT (K / S2.00)

SC: 1" = 1'-0"

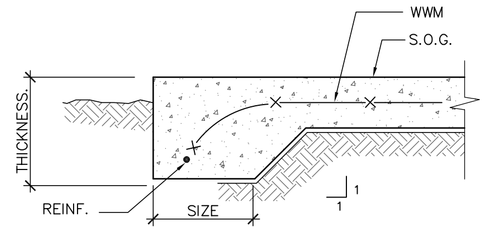

TYPICAL DETAIL : THICKENED EDGE (T.E.) (F / S2.00)

N.T.S.

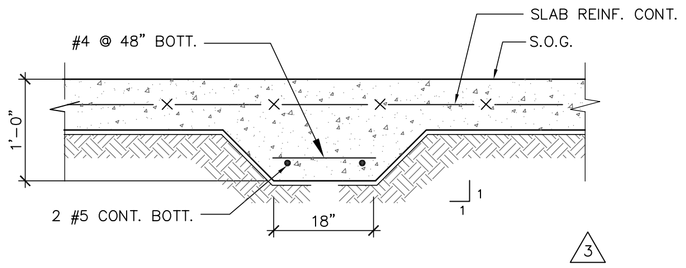

TYPICAL DETAIL : THICKENED SLAB (TS) (G / S2.00)

N.T.S.

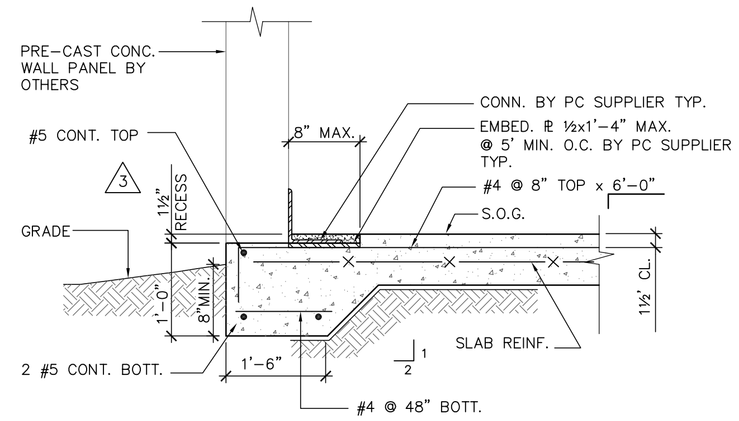

TYPICAL DETAIL : MONOLITHIC FTG. (MF) (H / S2.00)

N.T.S.

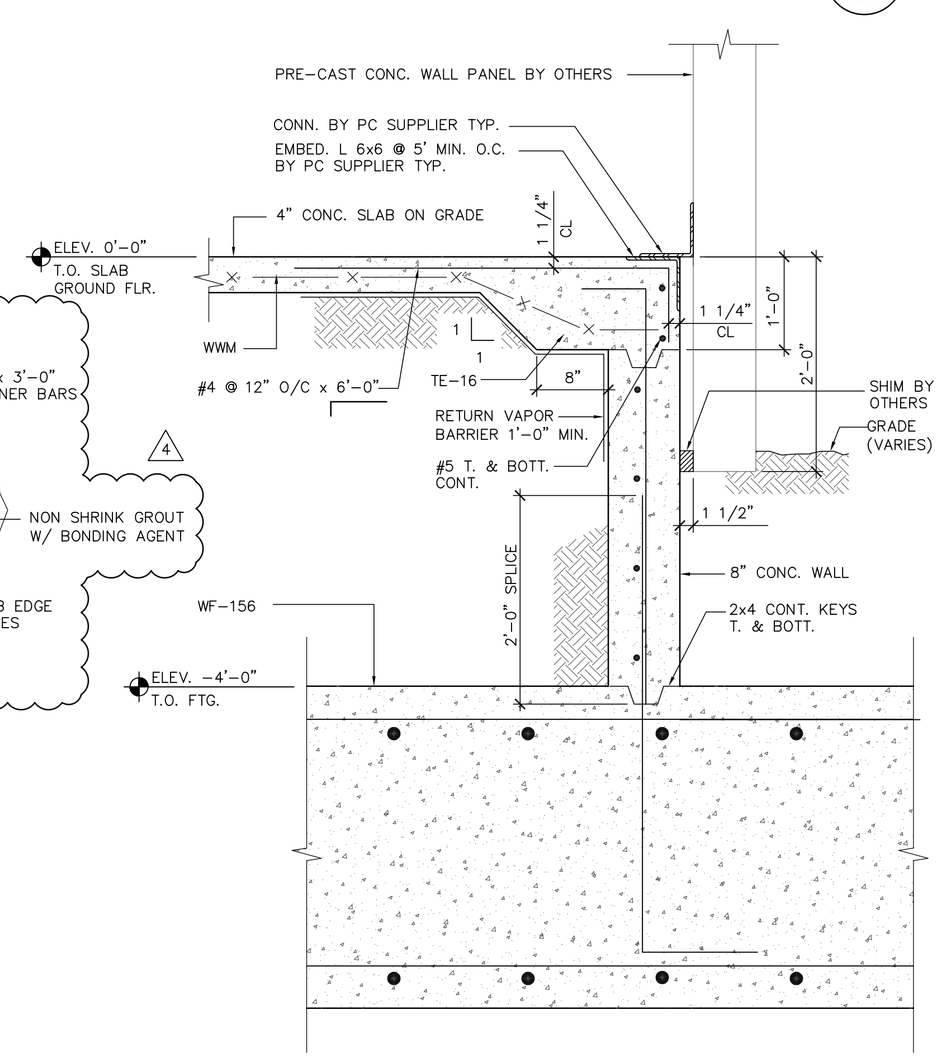

TYPICAL SECTION AT RETAINING WALL (3 / S2.00)

SC: 1" = 1'-0"

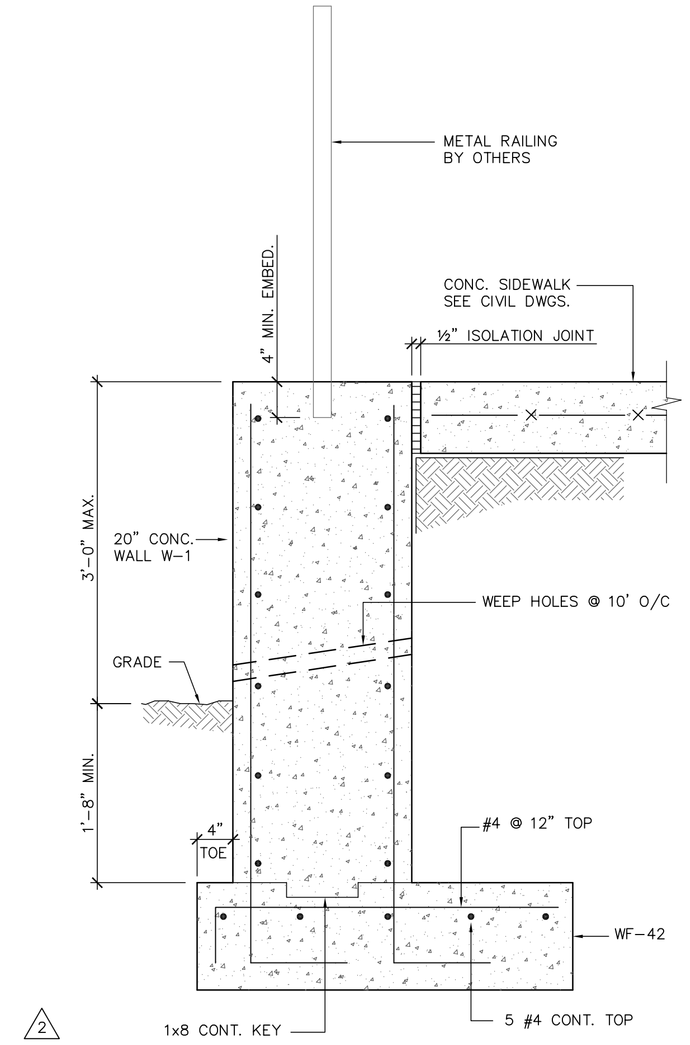

SECTION AT RETAINING WALL (1 / S2.00)

N.T.S.

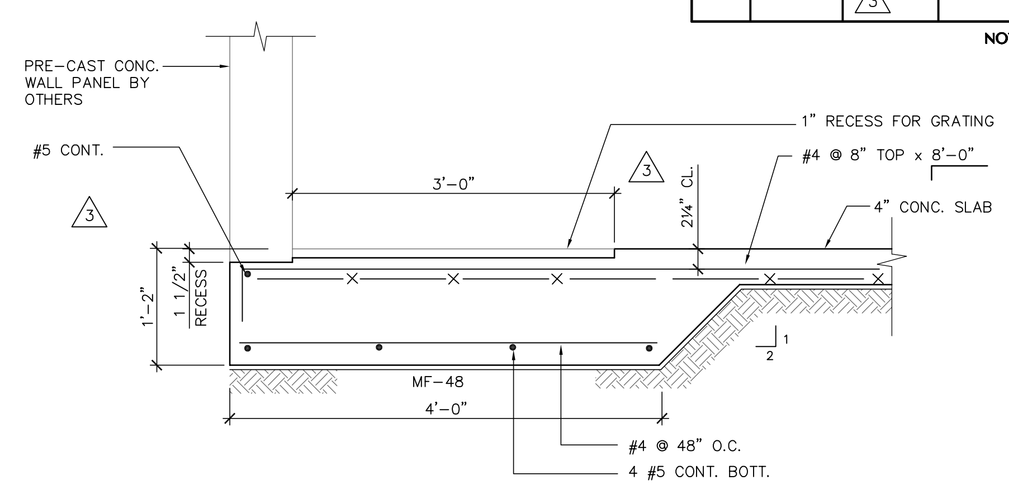

SECTION AT LOBBY ENTRY (2 / S2.00)

SC: 1" = 1'-0"

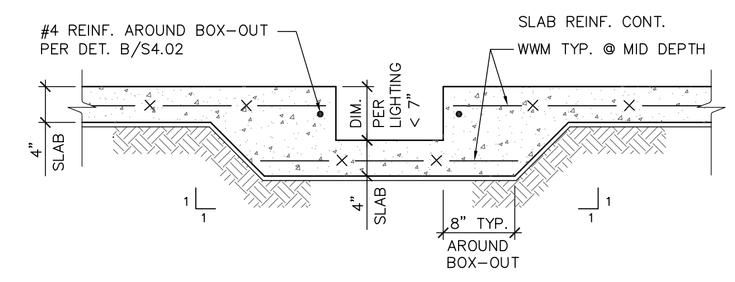

LIGHTING BOX-OUT DETAIL @ SLAB-ON-GRADE (I / S2.00)

N.T.S.

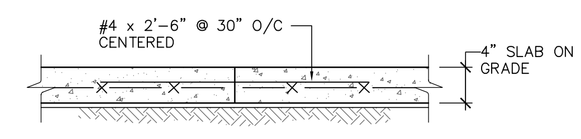

EMERGENCY BULKHEAD DETAIL * (J / S2.00)

SC: 1" = 1'-0"

* WHEN POUR IS INTERRUPTED FOR OVER 30 MIN. BETWEEN JOINTS.

FOOTING SCHEDULE

MARK	SIZE	THICKNESS	REINFORCING (BOTT. UNO)	REMARKS
F-3.5	3'-6"x3'-6"	16"	7#4 EW	
F-3.5T	3'-6"x3'-6"	15"	6#4 EW T. & BOTT.	
F-5	5'-0"x5'-0"	20"	5#6 EW	
F-6	6'-0"x6'-0"	18"	6#6 EW	
F-6.5	6'-6"x6'-6"	20"	5#7 EW	
F-7	7'-0"x7'-0"	21"	6#7 EW	
F-7.5	7'-6"x7'-6"	23"	7#7 EW	
F-8	8'-0"x8'-0"	24"	6#8 EW	
F-8.5	8'-6"x8'-6"	26"	6#8 EW	
F-9	9'-0"x9'-0"	27"	7#8 EW	
F-9.5	9'-6"x9'-6"	30"	8#8 EW	
F-10	10'-0"x10'-0"	29"	9#8 EW	
F-10.5	10'-6"x10'-6"	30"	10#8 EW	
F-10T	10'-0"x10'-0"	30"	9#8 EW T. & BOTT.	
F-11	11'-0"x11'-0"	32"	11#8 EW	
F-11.5	11'-6"x11'6"	33"	9#9 EW	
F-17	17'-0"x17'-0"	36"	14#9 EW	
F-17T	17'-0"x17'-0"	36"	14#9 EW T. & BOTT.	
TE	8" CONT.	8"	#5 CONT.	SEE DET. F/S2.00
TE-12	12" CONT.	8"	2#5 CONT.	SEE DET. F/S2.00
TE-16	16" CONT.	12"	#5 T. & BOTT.	SEE SECT. 3/S2.00
TS	18" CONT.	12"	2#5 CONT.	SEE DET. G/S2.00
WF-24	24" CONT.	12"	3#5 CONT. #4@48" TRANSV.	
WF-30	30" CONT.	12"	3#5 CONT. #4@18" TRANSV.	SEE SECT. 2/S4.00
WF-42	42" CONT.	12"	#4@12" TRANSV. T. 5#4 CONT. T.	SEE SECT. 1/S2.00
WF-156	13' CONT.	36"	#9@15" EW T. & BOTT.	
MF-18	18" CONT.	12"	2#5 CONT.	SEE DET. H/S2.00
MF-24	24" CONT.	12"	3#5 CONT.	SEE SECT. 3/S4.00
MF-48	48" CONT.	14"	4#5 CONT.	SEE SECT. 2/S2.00
		3		

NOTE : PROVIDE #5 CORNER REINF. W/30" LEGS IN CONT. FTGS. TO MATCH CONT. REINF. 3

SCHOOL OF INTERNATIONAL AND PUBLIC AFFAIRS
BT-835
MIAMI, FLORIDA

FLORIDA INTERNATIONAL UNIVERSITY
MIAMI, FLORIDA

ARCHITECT OF RECORD
ARQUITECTONICA
801 Brickell Ave, Suite 1100
Miami, Florida 33131
T 305.372.1812
F 305.372.1175
www.arquitectonica.com

STRUCTURAL ENGINEER:
PISTORINO & ALAM
7171 S.W. 62nd Ave, 4th FL
MIAMI, FL 33143
305.669.2700
305.669.2165

M.E.P. ENGINEER:
MEP ENGINEERING, INC
10590 N.W. 27th Street, SUITE 101
MIAMI, FL 33172
305.471.0160
305.593.2530

LANDSCAPE ARCHITECT
ARQUITECTONICAGEO
801 BRICKELL AVE, SUITE 1100
MIAMI, FL 33131
305.372.1812
305.372.1175

CIVIL ENGINEER:
TERRA CIVIL ENGINEERING
7855 NW 12 STREET, SUITE 202
DORAL, FL 33126
305.499.5010
786.664.6500

CONSULTANT:
NUTTING ENGINEERS
1310 NEPTUNE DRIVE
BOYTON BEACH, FL 33246
561.736.4900
561.737.9975

CONSULTANT:
WAVEGUIDE
8270 WOODLAND CENTER BLVD.
TAMPA, FLORIDA 33614
813-739-8998
813-769-3516

SEAL / SIGNATURE / DATE

JASON TAYLOR
FL. P.E. # 60277
P. & A. PROJECT No. 07-179

REVISION 02 - AUGUST 14 2009

OFFICE REGISTRATION #: AA C000465

Date	#	Revision
08-14-09	02	REVISION 02
10-28-09	03	REVISION 03
11-06-09	04	REVISION 04

Issue #	Issue Date / For
7.24.07	SCHEMATIC DESIGN APPROVAL
11.12.07	SCHEMATIC DESIGN APPROVAL
02.22.08	SCHEMATIC DESIGN APPROVAL
03.28.08	SCHEMATIC DESIGN APPROVAL
10.21.08	PROGRESS DESIGN DEVELOPMENT
11.26.08	100 % DESIGN DEVELOPMENT
02.25.09	FOUNDATION PERMIT
03.18.09	50% CONSTRUCTION DOCUMENTS
05.18.09	100% CONSTRUCTION DOCUMENTS

PROJECT NO.: 2441

SHEET INDEX

FOUND. SCHEDULE AND DETAILS
AS SHOWN

S2.00

© 2009 ARQUITECTONICA INTERNATIONAL, INC.

S2.00