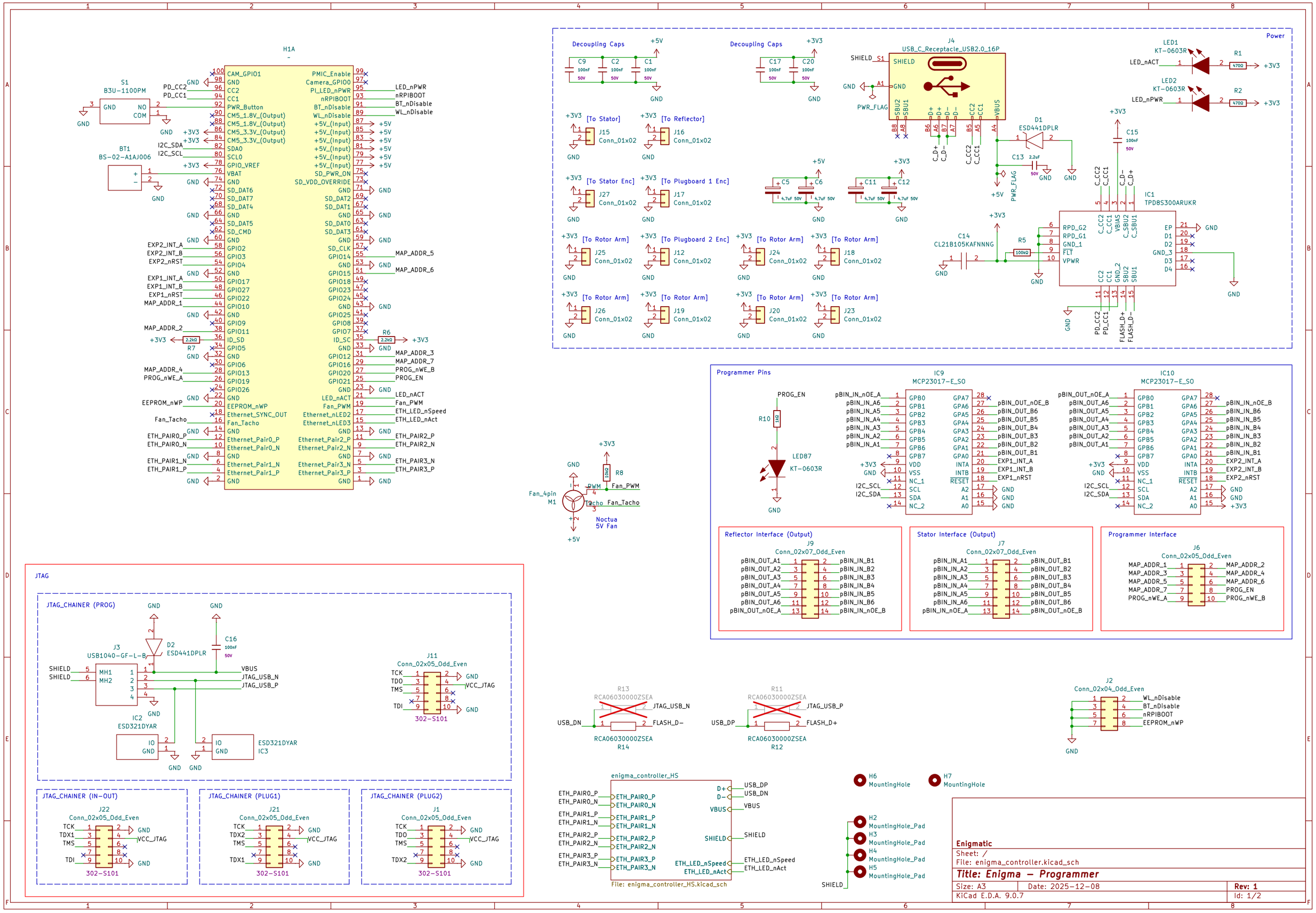
H1A
S1
B3U-1100PM
BT1
BS-02-A1AJ006
Power
Decoupling Caps
J4
USB_C_Receptacle_USB2.0_16P
LED1
KT-0603R
LED2
KT-0603R
D1
ESD441DPLR
IC1
TPD8S300ARUKR
C14
CL21B105KAFNNNG
Programmer Pins
IC9
MCP23017-E_SO
IC10
MCP23017-E_SO
LED87
KT-0603R
Fan_4pin
M1
Noctua
5V Fan
Reflector Interface (Output)
J9
Conn_02x07_Odd_Even
Stator Interface (Output)
J7
Conn_02x07_Odd_Even
Programmer Interface
J6
Conn_02x05_Odd_Even
JTAG
JTAG_CHAINER (PROG)
J3
USB1040-GF-L-B
D2
ESD441DPLR
IC2
ESD321DYAR
IC3
ESD321DYAR
J11
Conn_02x05_Odd_Even
302-S101
JTAG_CHAINER (IN-OUT)
J22
Conn_02x05_Odd_Even
JTAG_CHAINER (PLUG1)
J21
Conn_02x05_Odd_Even
JTAG_CHAINER (PLUG2)
J1
Conn_02x05_Odd_Even
R13
RCA06030000ZSEA
R14
R11
RCA06030000ZSEA
R12
J2
Conn_02x04_Odd_Even
enigma_controller_HS
File: enigma_controller_HS.kicad_sch
H6
MountingHole
H7
MountingHole
H2
MountingHole_Pad
H3
MountingHole_Pad
H4
MountingHole_Pad
H5
MountingHole_Pad
Enigmatic
Sheet: /
File: enigma_controller.kicad_sch
Title: Enigma – Programmer
Size: A3
Date: 2025-12-08
Rev: 1
KiCad E.D.A. 9.0.7
Id: 1/2

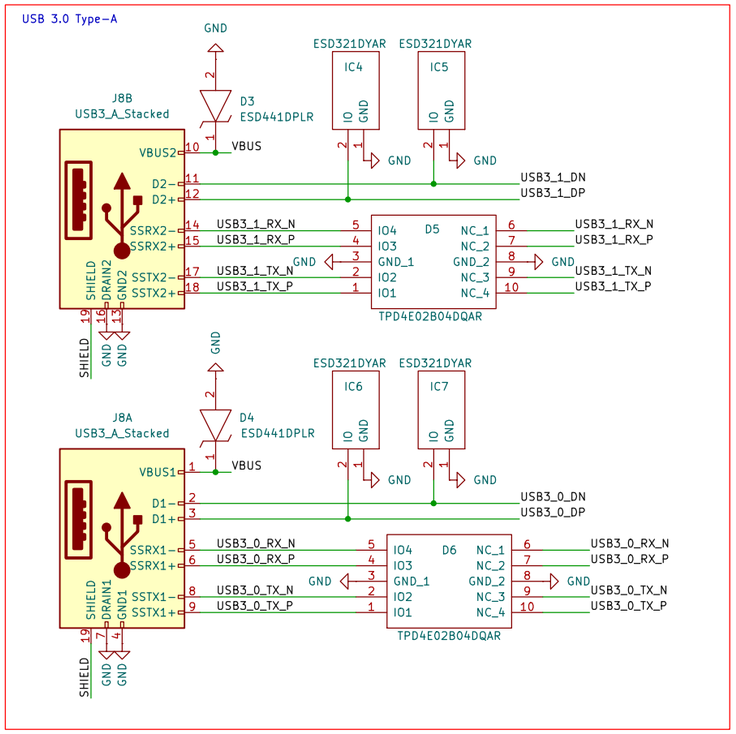

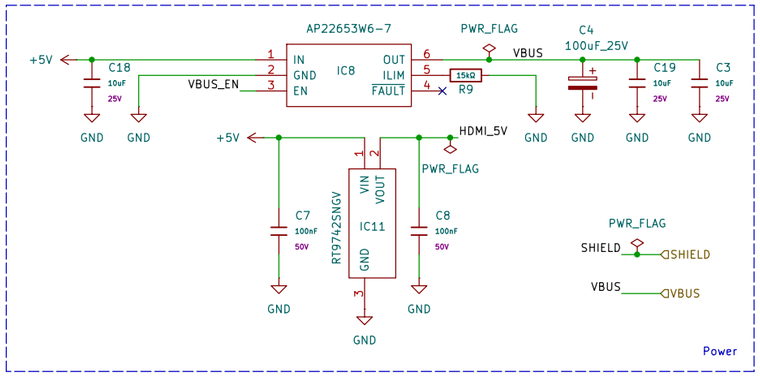

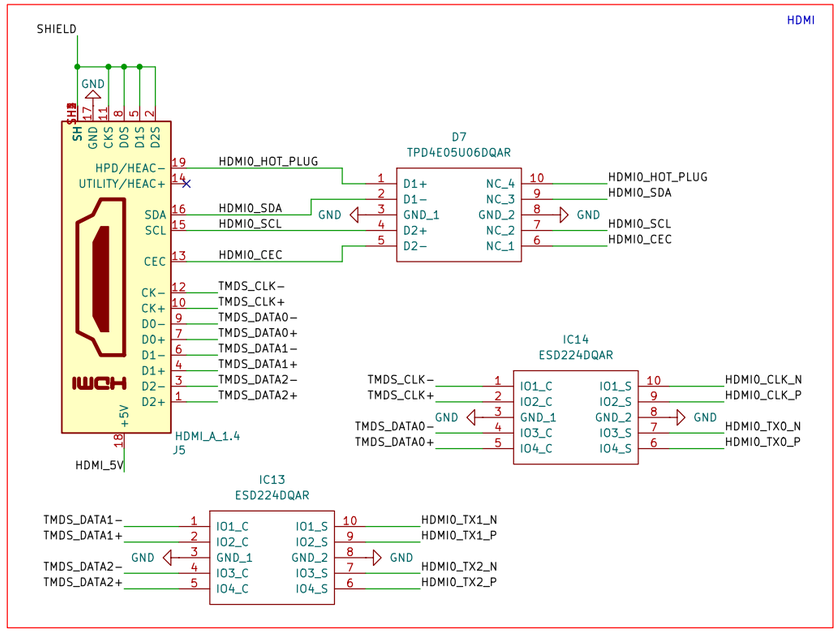

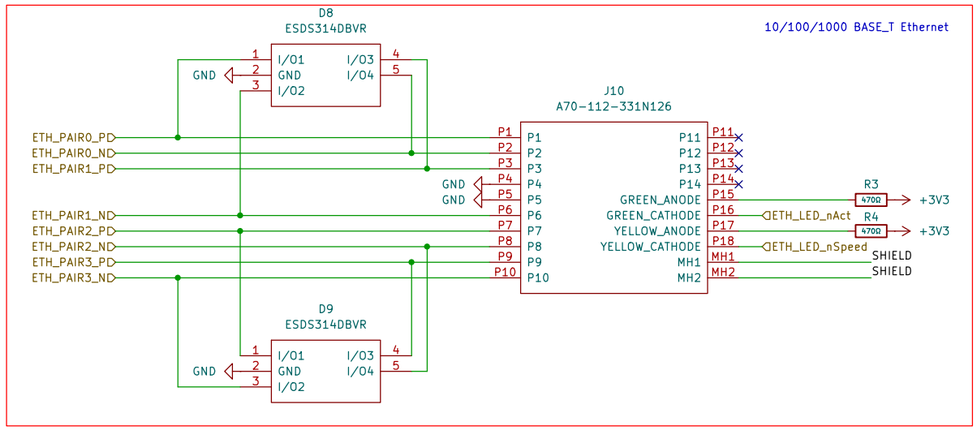

Enigmatic

Sheet: /enigma_controller_HS/
File: enigma_controller_HS.kicad_sch

Title: Enigma – Programmer

Size: A3	Date: 2025-12-08	Rev: 1
KiCad E.D.A. 9.0.7		Id: 2/2