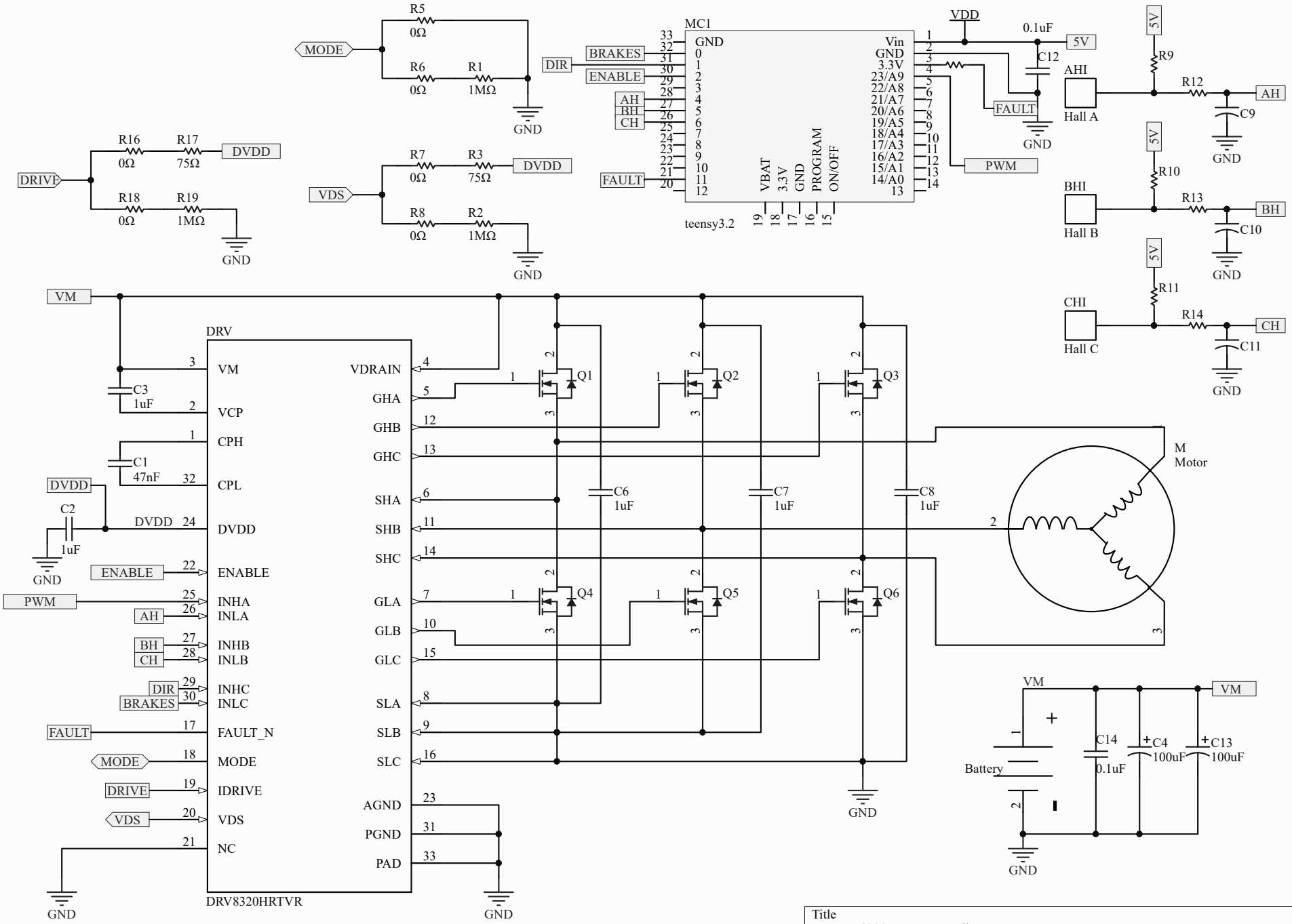

Title
DRV8320 Motor Controller

Size	Number	Revision
A		2.0

Date:	12/23/2019	Sheet 1 of 1	
File:	C:\Users\Huy\Desktop\DRV\DRV.SchDoc	Drawn By:	Huy Nguyen