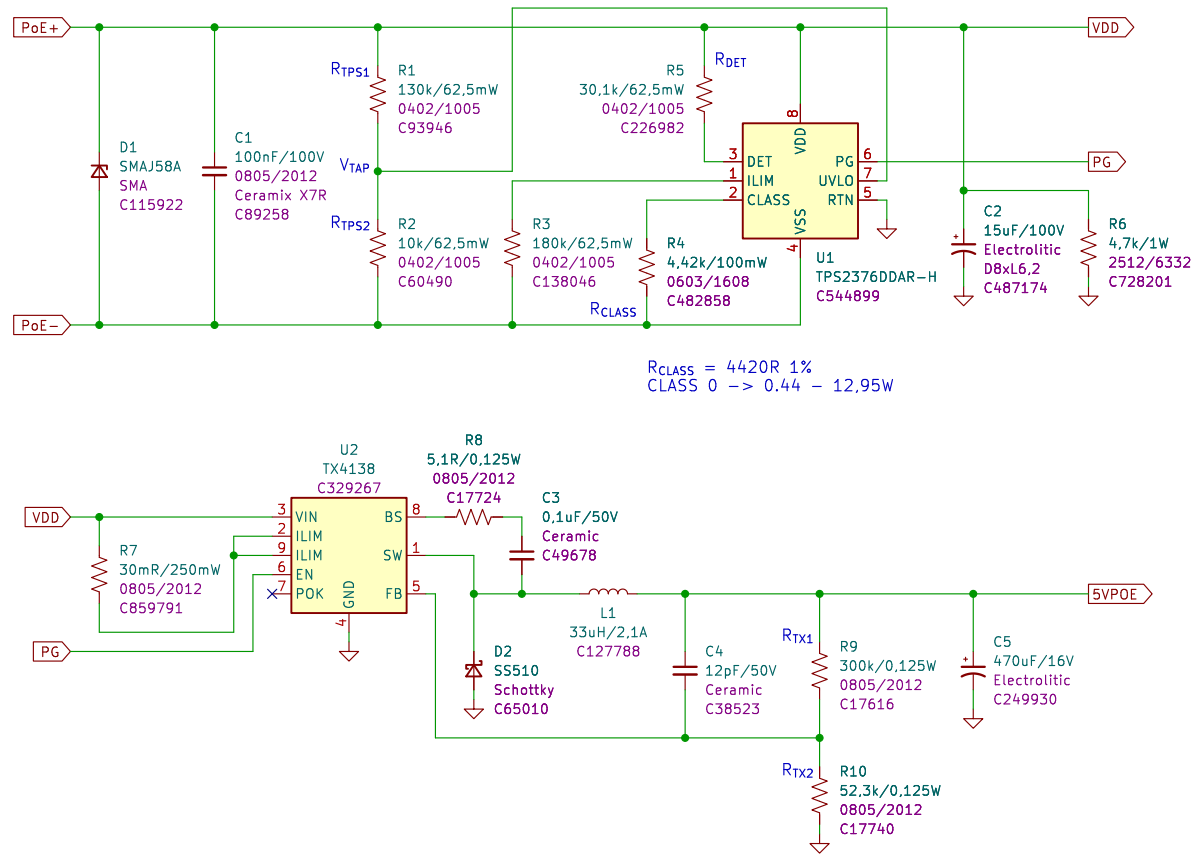

NOTES

TPS2375 (IEEE 802.3af)
TURN ON VOLTAGE = 39.3V
TURN OFF VOLTAGE = 30.5V

TPS2376−H
TURN ON VOLTAGE: V_{TAP} = 2.49V
HYSTERESIS = 0.56V
TURN OFF VOLTAGE: V_{TAP} = 1.93V

DETECTION RESISTANCE MUST BE 24.9K +/− 5% OR 23,655K TO 26.145K.

THE TOTAL RESISTANCE OF THE VOLTAGE DIVIDER TO UVLO WILL APPEAR IN PARALLEL WITH R_{DET} TO FORM THE EQUIVALENT DETECTION RESISTANCE.

$R_{EQUIV} = (R_{DIV1} + R_{DIV2}) // R_{DET}$
R_{EQUIV} = 443.6 // 26.7
R_{EQUIV} = 25.184k −> OK

$V_{TAP} = V_{DD} * R_{TPS2} / (R_{TPS1}+R_{TPS2})$

TURN ON:
2.5 = V_{DD} * 31.6 / 443.6
V_{DD} = 35.09V −> OK

TURN OFF:
1.93 = V_{DD} * 31.6 / 443.6
V_{DD} = 27.09V −> OK

$R_{TX2} = R_{TX1}/(V_{OUT} / 0{,}805 - 1)$
$V_{OUT} = (R_{TX1} / R_{TX2}) + 1) * 0{,}805$
V_{OUT} = (300k / 52,3k + 1) * 0,805
V_{OUT} = 5,42V
VOLTAGE DROP AT DIODE SS34 @2A = 0,4V
5V MAIN BUS @2A = 5,02V

$R_{SY1} = (V_{OUT} - 0{,}6V) * R_{SY2} / 0{,}6V$

$V_{OUT} = (0{,}6 * R_{SY1} / R_{SY2}) + 0{,}6$
V_{OUT} = (0,6 * 100k/22,1k) +0,6
V_{OUT} = 3,31V

USB 2.0 −> 5V 500mA
USB 3.0 −> 5V 900mA

VOLTAGE DROP AT DIODE B5819W @500mA = 0,4V
5V USB BUS @500mA = 4,6V

Sheet: /POWER/
File: esp−poe−2rl−V1−power.kicad_sch

Title:

Size: A4	Date:	Rev:
KiCad E.D.A. kicad 7.0.2		Id: 2/2