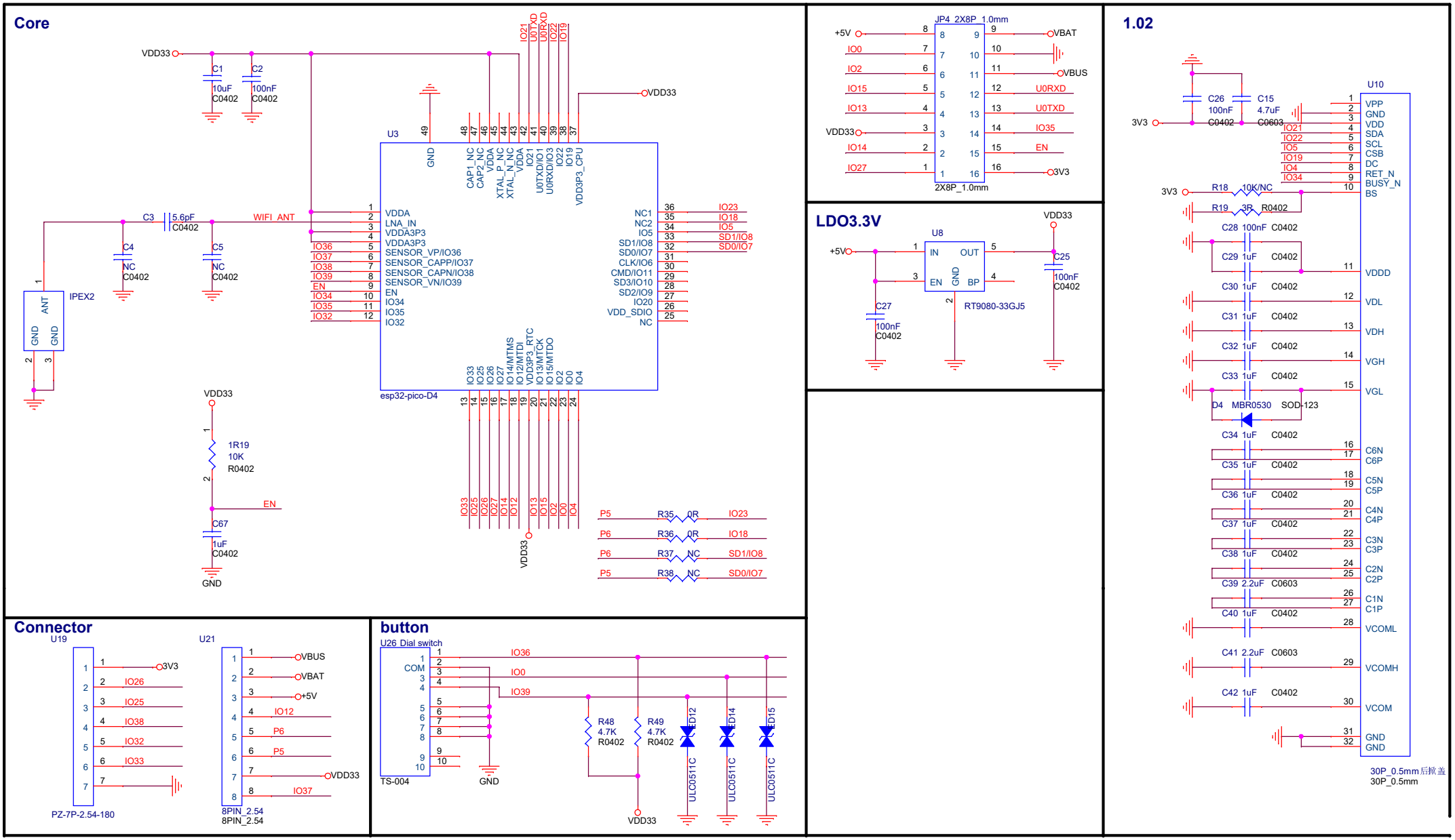

Title	t89_v1.1	
Size B	Document Number 1.ESP32-PICO-D4	Rev V1.1
Date: Tuesday, April 27, 2021	Sheet 1 of 1	