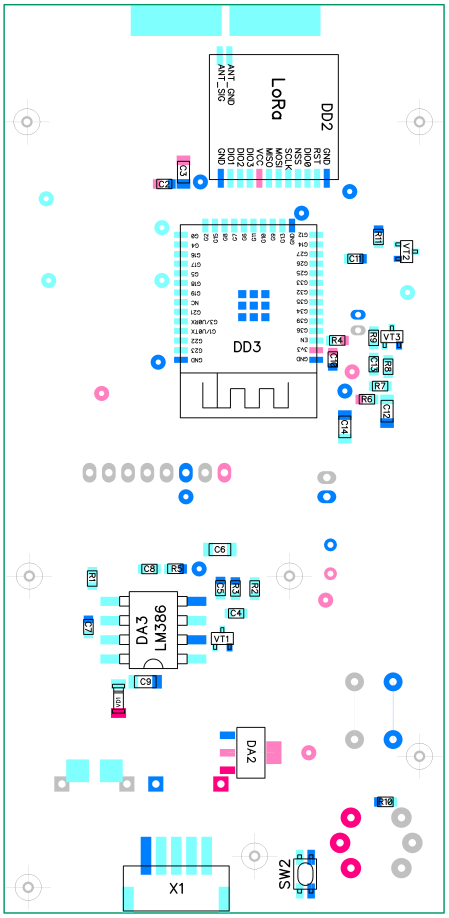
LoRa
DD2
DD3
DA3
LM386
DA2
X1
SW2

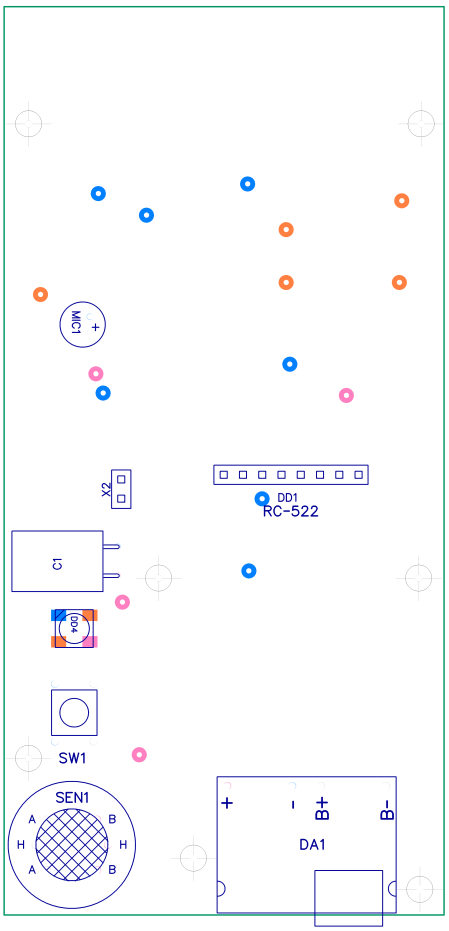
MIC1
X2
DD1
RC-522
C1
SW1
SEN1
DA1

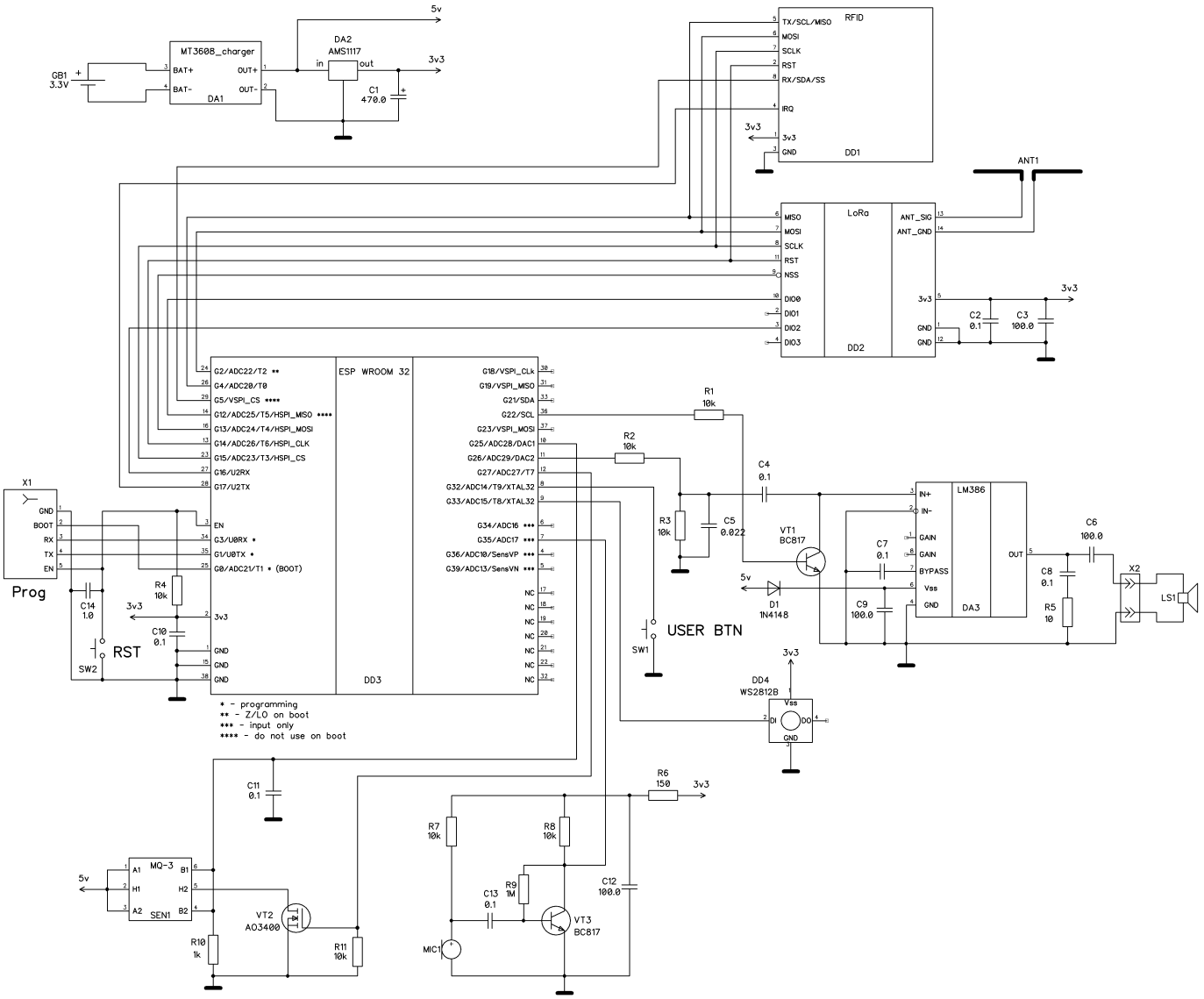
MT3608_charger
DA1
DA2
AMS1117
C1
470.0
RFID
DD1
LoRa
DD2
ANT1
ESP WROOM 32
DD3
X1
Prog
RST
SW2
USER BTN
SW1
LM386
DA3
VT1
BC817
D1
1N4148
DD4
WS2812B
MQ-3
SEN1
VT2
AO3400
VT3
BC817
MIC1
X2
LS1
* - programming
** - Z/LO on boot
*** - input only
**** - do not use on boot