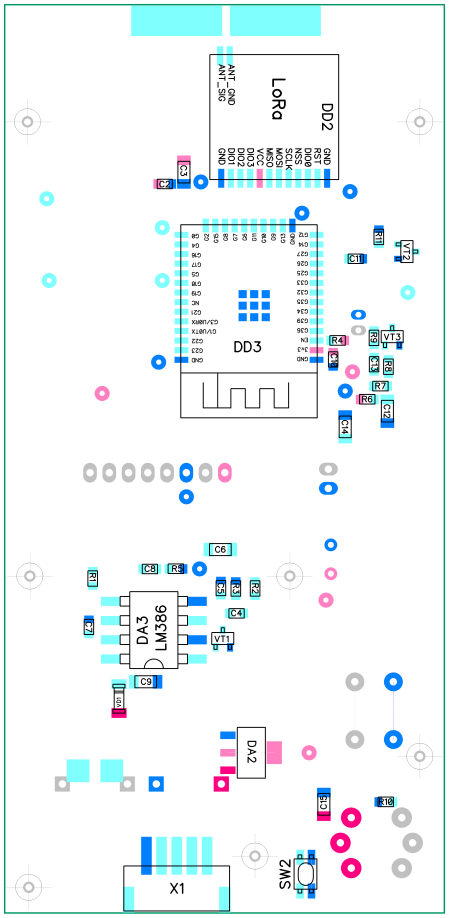
LoRa
DD2
DD3
DA3
LM386
DA2
X1
SW2
C2
C3
C4
C6
C9
C11
C14
R2
R3
R4
R6
R7
R8
R9
R10
VT1
VT2
VT3

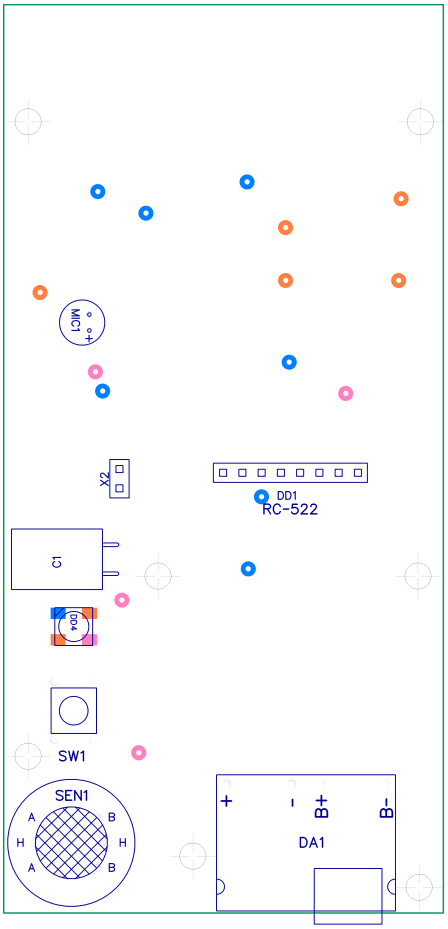
MIC1
X2
DD1
RC-522
C1
DD4
SW1
SEN1
DA1
B+
B-

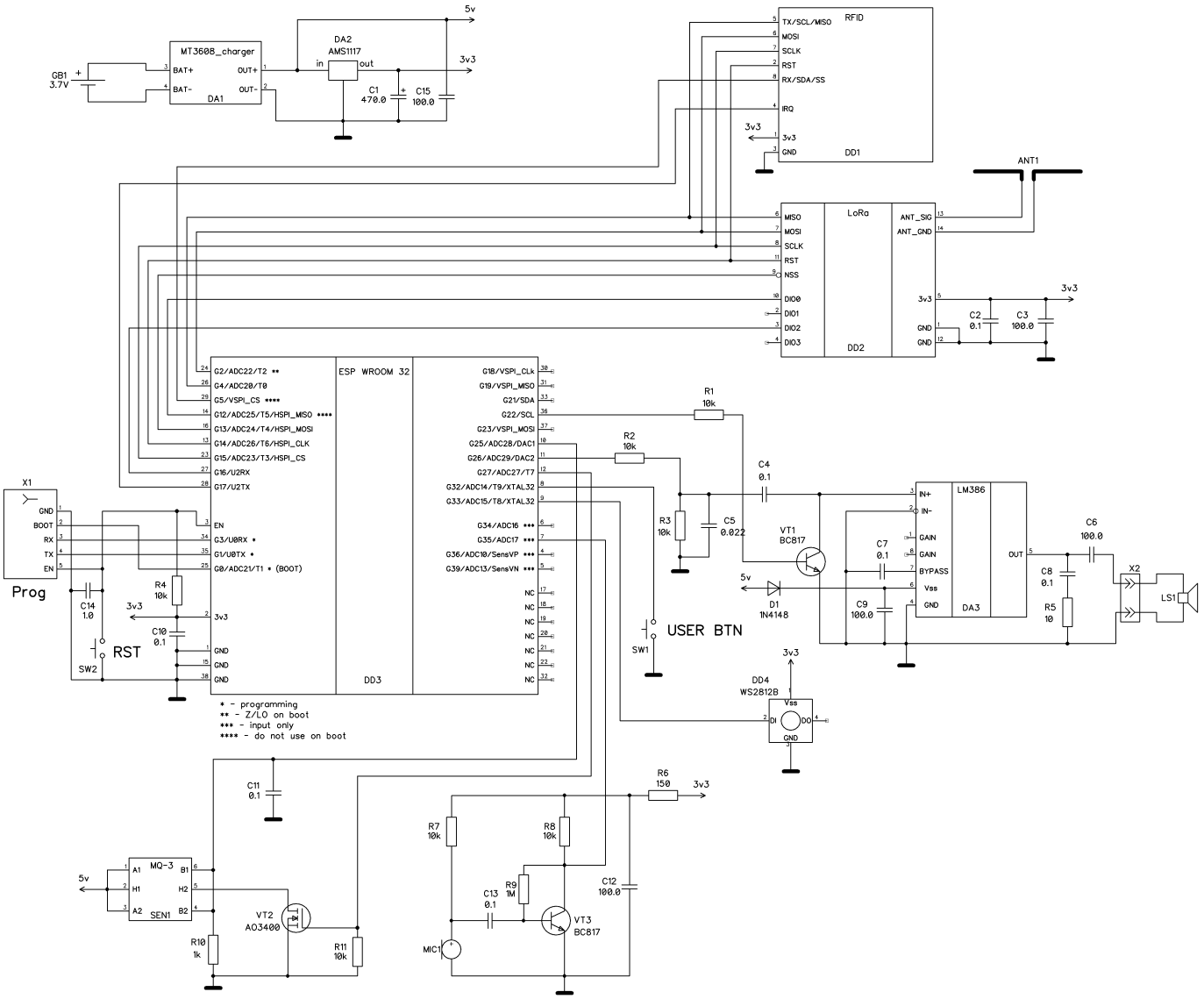
GB1
3.7V
MT3608_charger
BAT+
BAT-
OUT+
OUT-
DA1
DA2
AMS1117
in
out
5v
3v3
C1
470.0
C15
100.0
RFID
TX/SCL/MISO
MOSI
SCLK
RST
RX/SDA/SS
IRQ
3v3
GND
DD1
ANT1
LoRa
MISO
MOSI
SCLK
RST
NSS
DIO0
DIO1
DIO2
DIO3
ANT_SIG
ANT_GND
DD2
C2
0.1
C3
100.0
ESP WROOM 32
DD3
G2/ADC22/T2 **
G4/ADC20/T0
G5/VSPI_CS ****
G12/ADC25/T5/HSPI_MISO ****
G13/ADC24/T4/HSPI_MOSI
G14/ADC26/T6/HSPI_CLK
G15/ADC23/T3/HSPI_CS
G16/U2RX
G17/U2TX
EN
G3/U0RX *
G1/U0TX *
G0/ADC21/T1 * (BOOT)
3v3
GND
G18/VSPI_CLK
G19/VSPI_MISO
G21/SDA
G22/SCL
G23/VSPI_MOSI
G25/ADC28/DAC1
G26/ADC29/DAC2
G27/ADC27/T7
G32/ADC14/T9/XTAL32
G33/ADC15/T8/XTAL32
G34/ADC16 ***
G35/ADC17 ***
G36/ADC10/SensVP ***
G39/ADC13/SensVN ***
NC
X1
GND
BOOT
RX
TX
EN
Prog
C14
1.0
R4
10k
C10
0.1
RST
SW2
R1
10k
R2
10k
R3
10k
C5
0.022
C4
0.1
VT1
BC817
D1
1N4148
SW1
USER BTN
LM386
IN+
IN-
GAIN
GAIN
BYPASS
Vss
GND
OUT
DA3
C7
0.1
C9
100.0
C6
100.0
C8
0.1
R5
10
X2
LS1
DD4
WS2812B
Vss
DI
DO
GND
* - programming
** - Z/LO on boot
*** - input only
**** - do not use on boot
C11
0.1
R6
150
R7
10k
R8
10k
R9
1M
C13
0.1
C12
100.0
VT3
BC817
MIC1
MQ-3
A1
H1
A2
B1
H2
B2
SEN1
VT2
AO3400
R10
1k
R11
10k