DESIGN TEAM :: CONTACT DATA

CLIENT:

ARCHITECTURE:
GRAF STUDIO, LLC
P.O. BOX 743
FRANKLIN, KY
(270) 991-7345

SHEET INDEX

ARCHITECTURAL

A000	=	COVER SHEET
A001	=	PROJECT DETAILS
A002	=	ARCHITECTURAL SITE PLAN
A100	=	FOUNDATION PLAN
A101	=	BASEMENT LEVEL PLAN
A102	=	MAIN LEVEL PLAN
A103	=	UPPER LEVEL PLAN
A104	=	ROOF PLAN
A201	=	ELEVATIONS
A202	=	ELEVATIONS
A301	=	DETAILS
A302	=	ENLARGEMENTS

BUILDING CODE INFORMATION

GENERAL INFORMATION

BUILDING CODES: 2012 TENNESSEE BUILDING CODE
2018 TENNESSEE RESIDENTIAL BUILDING CODE

OCCUPANCY CLASSIFICATION: SINGLE FAMILY (R-2)

CONSTRUCTION TYPE: TYPE VB (UNPROTECTED)

AREA BREAKDOWN:

CONDITIONED:

BASEMENT:	2,150 SQ.FT
MAIN LEVEL:	2,653 SQ.FT.
UPPER LEVEL:	2,114 SQ.FT.
TOTAL:	6,917 SQ.FT.

UNCONDITIONED:

COVERED PATIO:	178 SQ.FT.
COVERED STOOP:	34 SQ.FT.
REAR COVERED PORCH:	171 SQ.FT.
TOTAL:	383 SQ.FT.

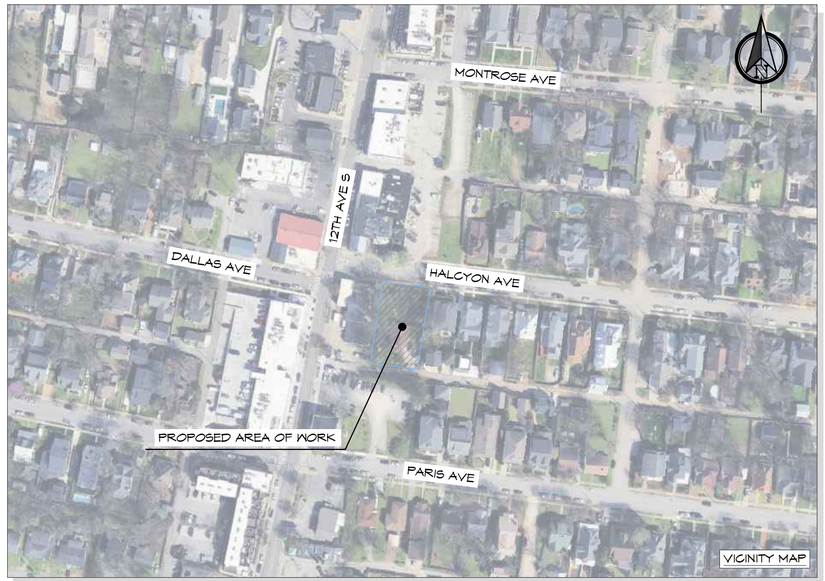

ABBREVIATIONS

A.C.T.	ACOUSTIC CEILING TILE
A.D.A.	AMERICAN'S W/ DISABILITIES ACT
A.F.F.	ABOVE FINISHED FLOOR
ALUM.	ALUMINUM
B.O.	BOTTOM OF
BLDG.	BUILDING
CLG.	CEILING
COL.	COLUMN
CONC.	CONCRETE
CONT.	CONTINUOUS
COORD.	COORDINATION
C.J.	CONTROL JOINT
DET.	DETAIL
DIA.	DIAMETER
E.J.	EXPANSION JOINT
E.F.	EXHAUST FAN
E.L.	ELEVATION
E.Q.	EQUAL
EXT.	EXTERIOR
F.D.	FLOOR DRAIN (COORD. W/ PLUMBING)
F.E.	FIRE EXTINGUISHER
F.E.C.	FIRE EXTINGUISHER CABINET
F.F.E.	FINISHED FLOOR ELEVATION
FLR.	FLOOR
F.R.T.	FIRE RETARDANT TREATED
F.V.	FIELD VERIFY
GALV.	GALVANIZED
GYP.	GYPSUM BOARD
H.M.	HOLLOW METAL
MFR.	MANUFACTURER
MTL.	METAL
M.O.	MASONRY OPENING
O.C.	ON CENTER
O.H.	OPPOSITE HAND
PTD.	PAINTED
R.S.	ROOF DRAIN
SIM.	SIMILAR
TYP.	TYPICAL
U.N.O.	UNLESS NOTED OTHERWISE
V.I.F.	VERIFY IN FIELD

SYMBOLS

- # A### — EXTERIOR ELEVATION, REFER TO A200 SERIES
- # A### — BUILDING SECTION, REFER TO A300 SERIES
- # — PLAN NOTE TAG, REFER TO PLAN NOTES

graf studio
P.O. BOX 743
FRANKLIN, KY 42135
(270) 991 - 7345
leeross@thegrafstudio.com

DISCLAIMER:

ALL WORK SHALL CONFORM TO LOCAL, STATE AND FEDERAL BUILDING CODES.

ALL INFORMATION CONTAINED WITHIN THESE DOCUMENTS IS THE PROPERTY OF GRAF STUDIO, LLC AND SHALL NOT BE COPIED WITHOUT PRIOR EXPRESS WRITTEN CONSENT.

1117 HALCYON AVE
NASHVILLE, TN 37204

REVISIONS:

JOB NUMBER:	N/A
CHECKED BY:	
CLIENT:	P: E:
DATE:	03-20-2026
PROJECT STATUS:	DESIGN/BID/REVIEW

COVER SHEET

SHEET 01 — A-000

NOTE: THIS DRAWING SET IS INTENDED FOR THE CONSTRUCTION OF 1 PROJECT ON 1 OCCASION AND IS INTENDED ONLY FOR THE CLIENT(S) WHO CONTRACTED GRAF STUDIO, LLC. THIS DESIGN AGREEMENT CANNOT BE TRANSFERRED.

VIOLATION OF THIS POLICY IS A VIOLATION OF FEDERAL COPYRIGHT STATUTES WHICH MAY INCLUDE DAMAGES OF UP TO $150,000 PER INFRACTION.

UNAUTHORIZED REPRODUCTION, COPYING, OR REUSE OF THIS DESIGN OR ITS PARTS IS SUBJECT TO PROSECUTION.

GENERAL NOTES

1. THE GENERAL CONTRACTOR SHALL VERIFY ALL DIMENSIONS AND SITE CONDITIONS BEFORE COMMENCING WORK. THE ARCHITECT MUST BE NOTIFIED OF ANY DISCREPANCIES BEFORE PROCEEDING WITH THE WORK.

2. DO NOT SCALE DRAWINGS. IF DIMENSIONS ARE IN QUESTION, OBTAIN CLARIFICATION FROM THE ARCHITECT BEFORE CONTINUING WITH THE WORK.

3. DIMENSIONS ARE WITNESSED TO FACE OF CONCRETE OR TO FACE OF STUD UNLESS OTHERWISE NOTED = U.N.O..

4. ALL WORK PERFORMED UNDER THIS CONTRACT SHALL MEET ALL STATE BUILDING CODES, THE NATIONAL ELECTRIC CODE, AND ORDINANCES OF THE LOCAL AUTHORITY HAVING JURISDICTION.

5. THE ARCHITECT SHALL BE NOTIFIED BEFORE PROCEEDING WITH THE WORK IF A CONFLICT IS DISCOVERED WITHIN THE CONSTRUCTION DOCUMENTS.

6. THERE SHALL BE NO BUILDING MATERIALS CONTAINING ASBESTOS OR OTHER HAZARDOUS MATERIALS INSTALLED ON THIS PROJECT.

7. ALL MATERIALS AND EQUIPMENT PROVIDED SHALL BE INSTALLED AS PER MANUFACTURER'S RECOMMENDATION AND AS PER CODE REQUIREMENTS.

8. ITEMS REQUIRING FINISH SELECTIONS THAT DO NOT APPEAR IN THE DOCUMENTS SHALL BE SELECTED BY OWNER'S REPRESENTATIVE FROM SHOP DRAWINGS, SUBMITTAL, AND/OR SAMPLES AS REQUIRED.

9. THE DESIGN, ADEQUACY, AND SAFETY OF ERECTION BRACING, SHORING TEMPORARY SUPPORTS, ETC. IS THE SOLE RESPONSIBILITY OF THE GENERAL CONTRACTOR.

10. FILL SOLID ALL NEW MASONRY VOIDS WHERE ANCHORS OCCUR. FILL SOLID ALL NEW MASONRY UNITS LOCATED BELOW FINISHED GRADE.

11. COORDINATE LOCATIONS AND/OR ELEVATIONS OF FLOOR DRAINS, REGISTERS, GRILLES, LOUVERS, PANELS, ETC., WITH MECHANICAL AND ELECTRICAL CONTRACTORS.

12. SIZE AND LOCATION OF ALL FLOOR OPENINGS TO BE VERIFIED WITH THE TRADE AFFECTED BEFORE PROCEEDING WITH THE WORK.

13. BOLTING OF WOOD TO STRUCTURAL MEMBERS OF MASONRY SHALL BE WITH A MINIMUM OF 3/4" BOLTS AT 3'-0" O.C. EXCEPT WHERE SHOWN OTHERWISE.

14. PROVIDE LINTELS OVER ALL OPENINGS INCLUDING THOSE REQUIRED FOR DUCTWORK, PIPES, LOUVERS, GRILLES, DAMPERS, ETC.

15. PROVIDE CONCRETE PADS FOR ALL NEW MECHANICAL AND ELECTRICAL EQUIPMENT.

16. PROVIDE DOUBLE STUDS AND BLOCKING WHERE REQUIRED TO SUPPORT EQUIPMENT AND/OR MISCELLANEOUS ITEMS, I.E., TYPICAL CASEWORK MILLWORK, CABINETS, ETC.

17. SLOPE ALL GRADES, WALKS, AND CONCRETE PADS AWAY FROM BUILDING AT LEAST 1/8" PER FOOT.

18. PROVIDE CONCRETE SPLASH BLOCKS AT ALL DOWNSPOUT LOCATIONS.

19. PROVIDE 6 MIL VAPOR BARRIER UNDER ALL NEW INTERIOR CONCRETE SLAB ON GRADE CONDITIONS.
20. PROVIDE 1" THICK PERIMETER INSULATION AT ALL NEW SLABS ALONG EXTERIOR WALLS.

21. THE "GENERAL CONDITIONS OF THE CONTRACT FOR CONSTRUCTION" A.I.A. DOCUMENT A-201 IS HEREBY MADE A PART OF THIS PROJECT THE SAME AS IF BOUND HEREIN. THESE CONDITIONS APPLY TO ALL SUB-CONTRACTORS AS WELL AS TO THE GENERAL CONTRACTOR.

22. CONTRACTOR SHALL MAINTAIN THE JOB CLEAR OF TRASH AND DEBRIS. ALL WASTE MATERIAL SHALL BE REMOVED FROM SITE PRIOR TO SUBSTANTIAL COMPLETION AND PRIOR TO FINAL ACCEPTANCE.

23. CONTRACTOR SHALL VERIFY ALL DIMENSIONS AND CONDITIONS SHOWN ON THESE DRAWINGS WITH THOSE AT THE SITE. ANY VARIATION WHICH REQUIRES PHYSICAL CHANGE SHALL BE BROUGHT TO THE ATTENTION OF THE ARCHITECT.

24. CONTRACTOR SHALL NOT CUT STRUCTURAL WORK IN A MANNER RESULTING IN A REDUCTION OF LOAD CARRYING CAPACITY OR LOAD/DEFLECTION RATIO. NOTIFY ARCHITECT OF ALL STRUCTURAL CUTS PRIOR TO EXECUTION TO OBTAIN WRITTEN APPROVAL.

25. THE BUILDING ENVELOPE SHALL BE MAINTAINED IN A WATERTIGHT CONDITION AT ALL TIMES.

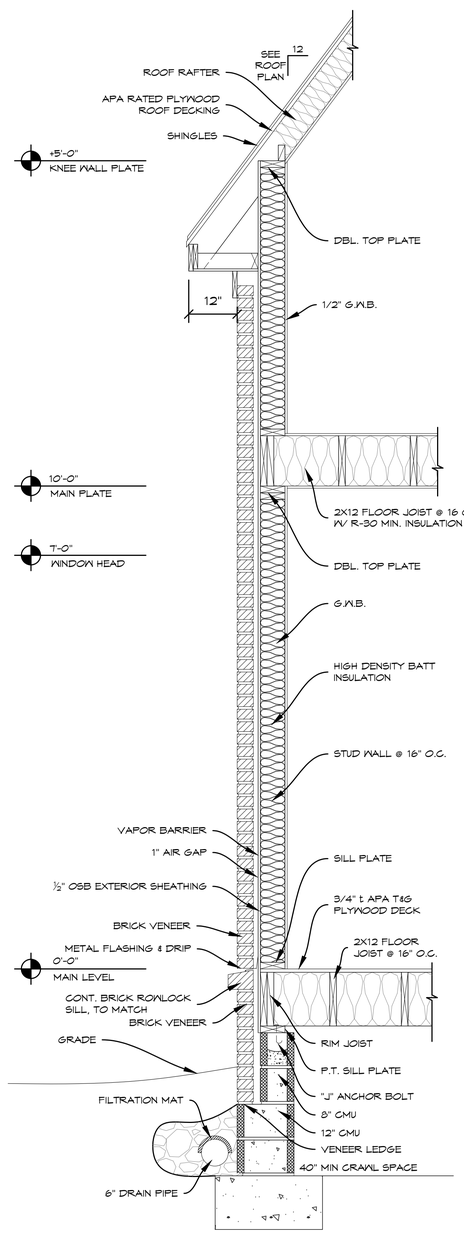

1 A001 2 STORY WALL SECTION
SCALE: 3/4" = 1'-0"

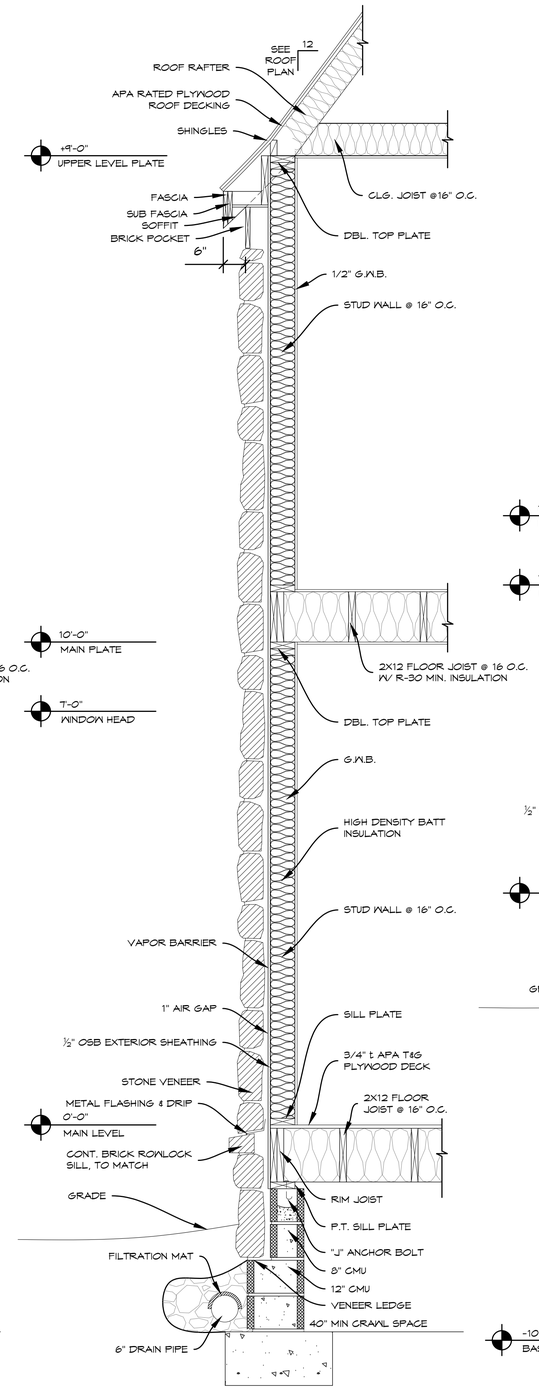

2 A001 2 STORY WALL SECTION
SCALE: 3/4" = 1'-0"

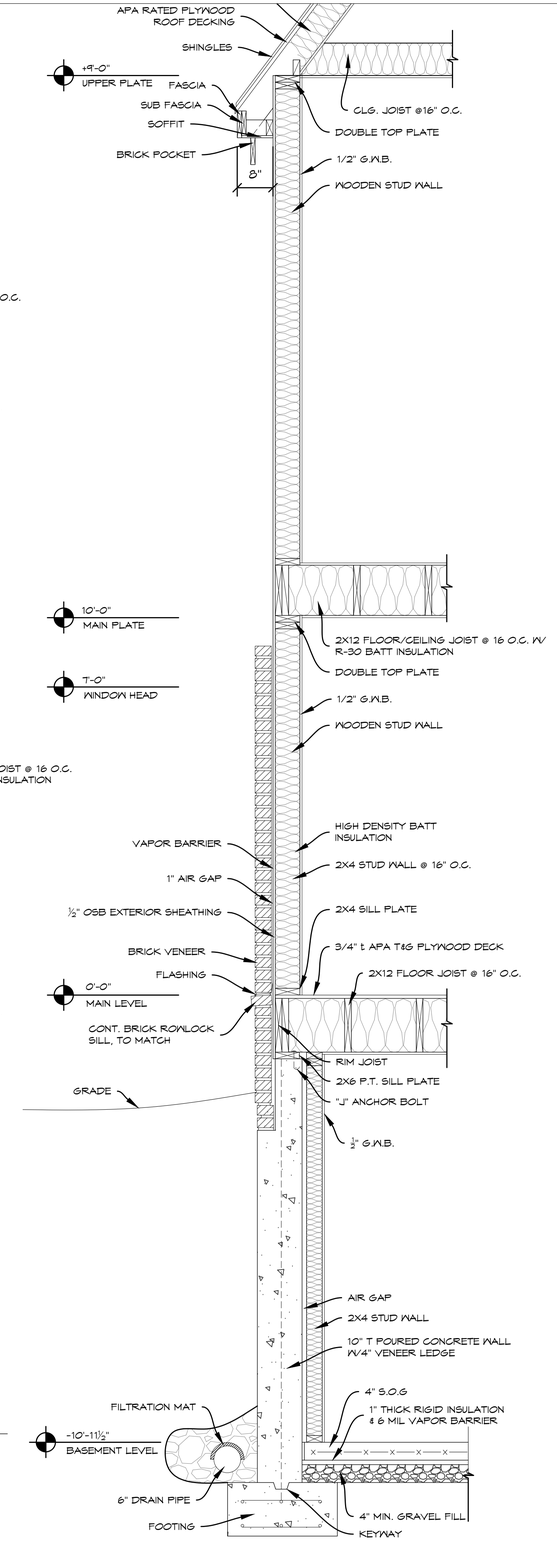

3 A001 POURED CONCRETE WALL S
SCALE: 3/4" = 1'-0"

graf studio
P.O. BOX 743
FRANKLIN, KY 42135
(270) 991 - 7345
leeross@thegrafstudio.com

DISCLAIMER:
ALL WORK SHALL CONFORM TO LOCAL, STATE AND FEDERAL BUILDING CODES.

ALL INFORMATION CONTAINED WITHIN THESE DOCUMENTS IS THE PROPERTY OF GRAF STUDIO, LLC AND SHALL NOT BE COPIED WITHOUT PRIOR EXPRESS WRITTEN CONSENT.

1117 HALCYON AVE
NASHVILLE, TN 37204

REVISIONS:

JOB NUMBER: N/A
CHECKED BY:
CLIENT:
P:
E:
DATE: 03-20-2026
PROJECT STATUS:
DESIGN/BID/REVIEW

PROJECT DETAILS
SHEET 02
A-001

1 A002 ARCHITECTURAL SITE PLAN
SCALE: 1/8" = 1'-0"

graf studio
P.O. BOX 743
FRANKLIN, KY 42135
(270) 991 - 7345
leeross@thegrafstudio.com

DISCLAIMER:
ALL WORK SHALL CONFORM TO LOCAL, STATE AND FEDERAL BUILDING CODES.
ALL INFORMATION CONTAINED WITHIN THESE DOCUMENTS IS THE PROPERTY OF GRAF STUDIO, LLC AND SHALL NOT BE COPIED WITHOUT PRIOR EXPRESS WRITTEN CONSENT.

1117 HALCYON AVE
NASHVILLE, TN 37204

REVISIONS:

JOB NUMBER:	N/A
CHECKED BY:	
CLIENT:	P: E:
DATE:	03-20-2026
PROJECT STATUS:	DESIGN/BID/REVIEW

ARCHITECTURAL SITE PLAN

SHEET 03 A-002

GENERAL NOTES

- ALL DIMENSIONS ARE WITNESSED FROM FACE OF CONCRETE BLOCK TO F.O. CONCRETE BLOCK UNLESS NOTED OTHERWISE.

- ALL WALLS ARE 8" CONCRETE BLOCK (CMU) ON 12" CMU BRICK LEDGE UNLESS NOTED OTHERWISE

- COORDINATE VENEER LEDGE IN FIELD W/ CLIENT MASONRY SELECTION.

- REFER TO STRUCTURAL FOR FOUNDATION DETAILS AND SPECIFICATIONS.

graf studio
P.O. BOX 743
FRANKLIN, KY 42135
(270) 991 - 7345
leeross@thegrafstudio.com

DISCLAIMER:

ALL WORK SHALL CONFORM TO LOCAL, STATE AND FEDERAL BUILDING CODES.

ALL INFORMATION CONTAINED WITHIN THESE DOCUMENTS IS THE PROPERTY OF GRAF STUDIO, LLC AND SHALL NOT BE COPIED WITHOUT PRIOR EXPRESS WRITTEN CONSENT.

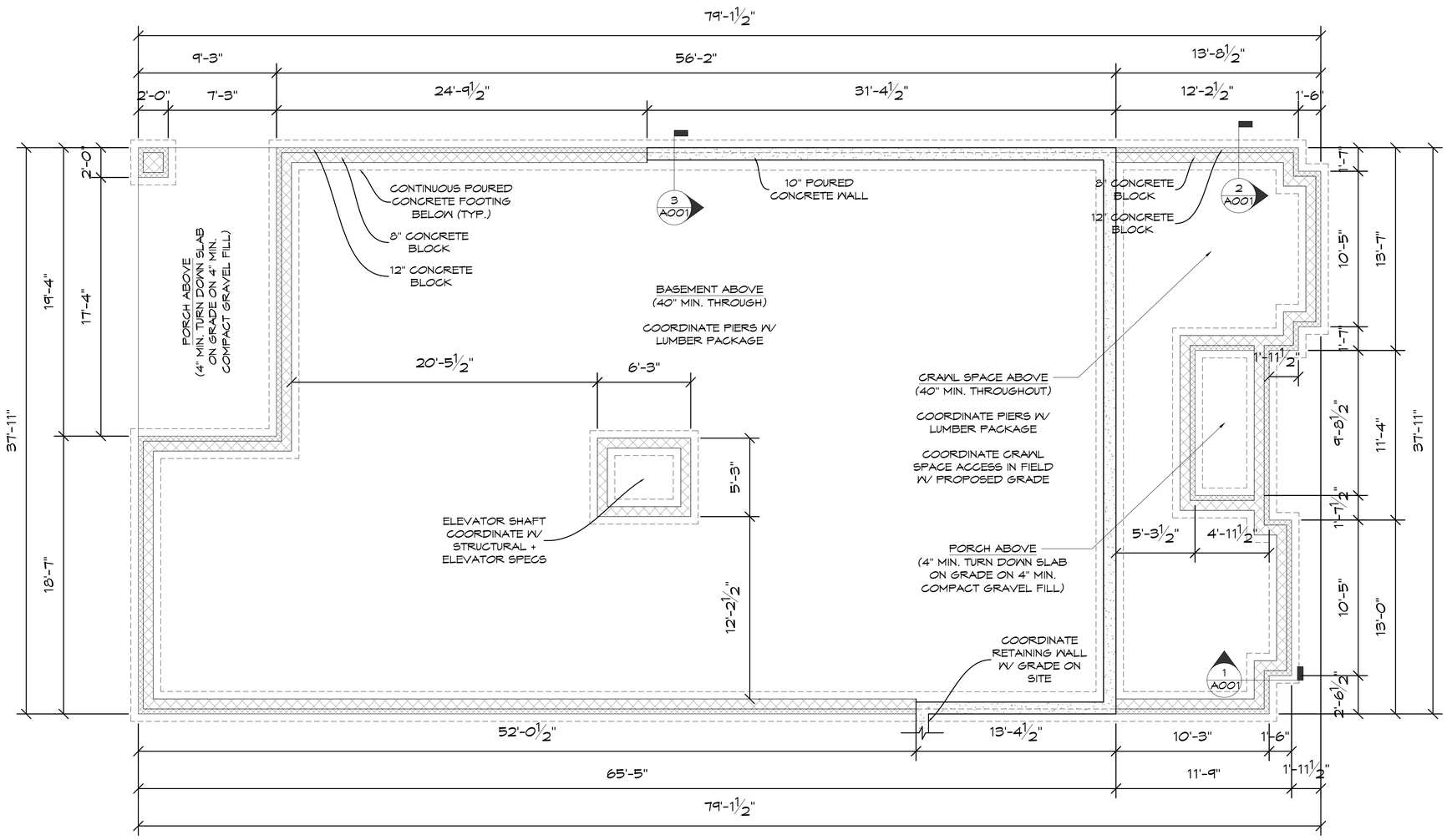

WALL LEGEND
NEW CONSTRUCTION

- 8" CONCRETE BLOCK
- 12" CONCRETE BLOCK BELOW
- POURED CONCRETE WALL

1 A100 FOUNDATION PLAN
SCALE: 3/16" = 1'-0"

0' 10' 30'

1117 HALCYON AVE
NASHVILLE, TN 37204

REVISIONS:

JOB NUMBER:	N/A
CHECKED BY:	
CLIENT:	P: E:
DATE:	03-20-2026
PROJECT STATUS:	DESIGN/BID/REVIEW

FOUNDATION PLAN

SHEET 04 A-100

GENERAL NOTES

- ALL DIMENSIONS ARE WITNESSED FROM FACE OF CONCRETE BLOCK TO F.O. CONCRETE BLOCK UNLESS NOTED OTHERWISE.

- ALL WALLS ARE 8" CONCRETE BLOCK (CMU) ON 12" CMU BRICK LEDGE UNLESS NOTED OTHERWISE

- COORDINATE VENEER LEDGE IN FIELD W/ CLIENT MASONRY SELECTION.

- REFER TO STRUCTURAL FOR FOUNDATION DETAILS AND SPECIFICATIONS.

graf studio
P.O. BOX 743
FRANKLIN, KY 42135
(270) 991 - 7345
leeross@thegrafstudio.com

DISCLAIMER:

ALL WORK SHALL CONFORM TO LOCAL, STATE AND FEDERAL BUILDING CODES.

ALL INFORMATION CONTAINED WITHIN THESE DOCUMENTS IS THE PROPERTY OF GRAF STUDIO, LLC AND SHALL NOT BE COPIED WITHOUT PRIOR EXPRESS WRITTEN CONSENT.

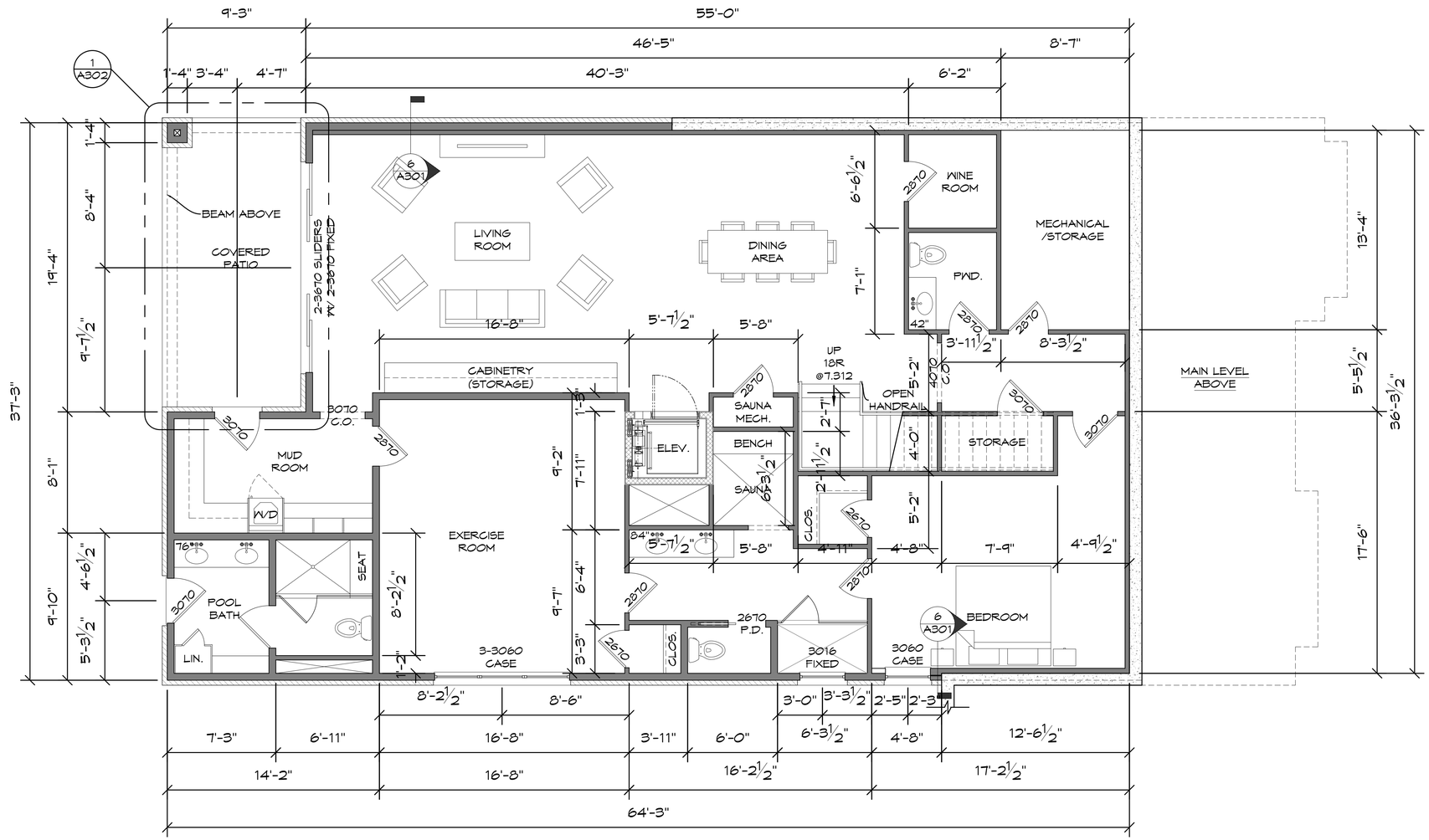

1117 HALCYON AVE
NASHVILLE, TN 37204

WALL LEGEND
NEW CONSTRUCTION

- 8" CONCRETE BLOCK
- 12" CONCRETE BLOCK BELOW
- POURED CONCRETE WALL
- WOOD STUD
- BRICK VENEER

1 A101 BASEMENT LEVEL PLAN
SCALE: 3/16" = 1'-0"

0' 10' 30'

REVISIONS:

JOB NUMBER:	N/A
CHECKED BY:	
CLIENT:	P: E:
DATE:	03-20-2026
PROJECT STATUS:	DESIGN/BID/REVIEW

BASEMENT LEVEL PLAN

SHEET 05 A-101

GENERAL PLAN NOTES

-ALL DIMENSIONS ARE WITNESSED FROM FACE OF STUD TO FACE OF STUD UNLESS NOTED OTHERWISE.

-ALL WALLS ARE WOOD STUD FRAMING UNLESS NOTED OTHERWISE.

-ALL EXTERIOR WALLS TO BE 2X6 STUDS UNLESS NOTED OTHERWISE

-ALL INTERIOR WALLS TO BE 2X4 STUDS UNLESS NOTED OTHERWISE

- ALL PLUMBING WALLS TO BE 2X6 STUDS UNLESS NOTED OTHERWISE

graf studio
P.O. BOX 743
FRANKLIN, KY 42135
(270) 991 - 7345
leeross@thegrafstudio.com

DISCLAIMER:

ALL WORK SHALL CONFORM TO LOCAL, STATE AND FEDERAL BUILDING CODES.

ALL INFORMATION CONTAINED WITHIN THESE DOCUMENTS IS THE PROPERTY OF GRAF STUDIO, LLC AND SHALL NOT BE COPIED WITHOUT PRIOR EXPRESS WRITTEN CONSENT.

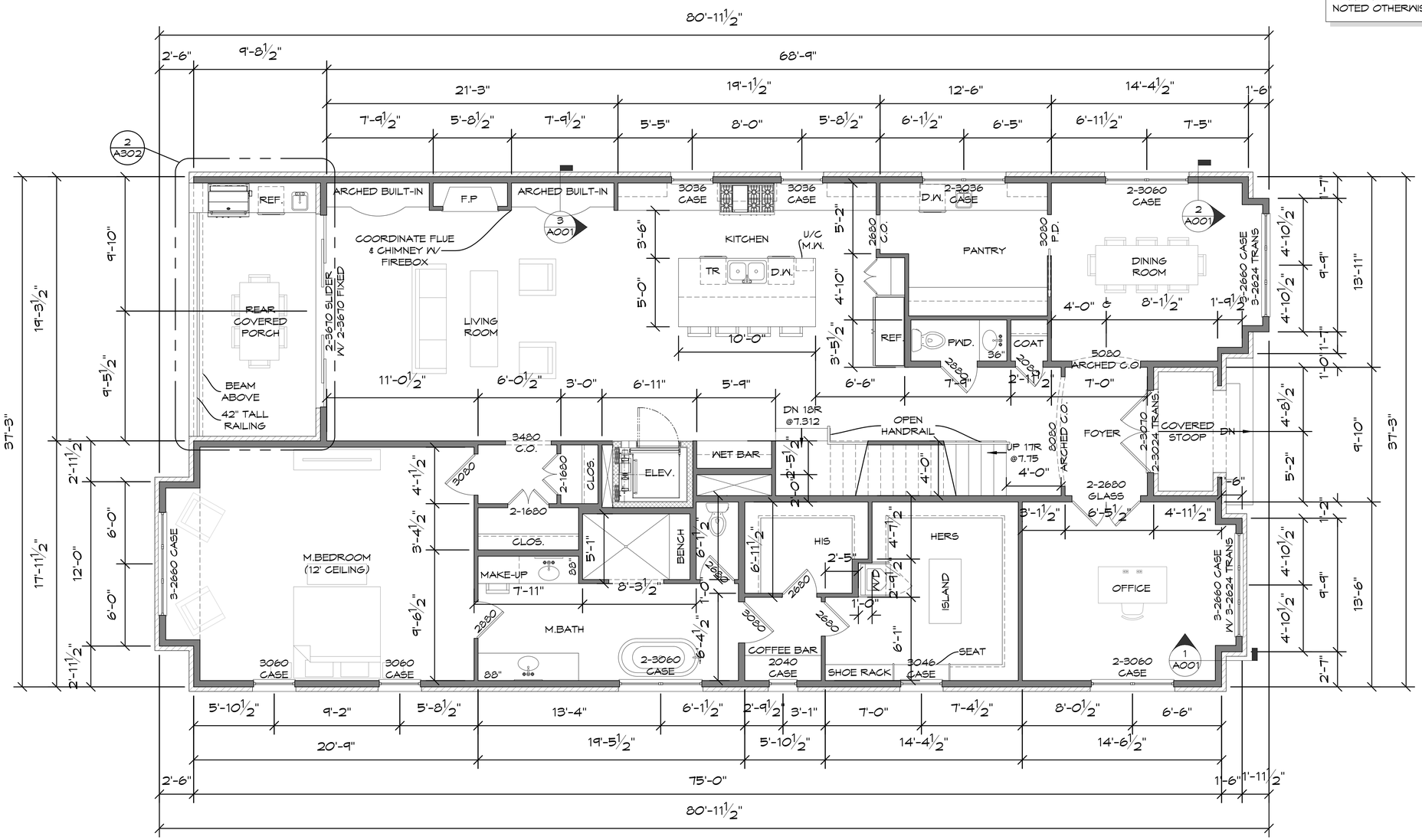

WALL LEGEND
NEW CONSTRUCTION

WOOD STUD

BRICK VENEER

1 A102 MAIN LEVEL PLAN
SCALE: 3/16" = 1'-0"

0' 10' 30'

1117 HALCYON AVE
NASHVILLE, TN 37204

REVISIONS:

JOB NUMBER:	N/A
CHECKED BY:	
CLIENT:	P: E:
DATE:	03-20-2026
PROJECT STATUS:	DESIGN/BID/REVIEW

MAIN LEVEL PLAN

SHEET 06 A-102

GENERAL PLAN NOTES

-ALL DIMENSIONS ARE WITNESSED FROM FACE OF STUD TO FACE OF STUD UNLESS NOTED OTHERWISE.

-ALL WALLS ARE WOOD STUD FRAMING UNLESS NOTED OTHERWISE.

-ALL EXTERIOR WALLS TO BE 2X6 STUDS UNLESS NOTED OTHERWISE

-ALL INTERIOR WALLS TO BE 2X4 STUDS UNLESS NOTED OTHERWISE

- ALL PLUMBING WALLS TO BE 2X6 STUDS UNLESS NOTED OTHERWISE

graf studio
P.O. BOX 743
FRANKLIN, KY 42135
(270) 991 - 7345
leeross@thegrafstudio.com

DISCLAIMER:

ALL WORK SHALL CONFORM TO LOCAL, STATE AND FEDERAL BUILDING CODES.

ALL INFORMATION CONTAINED WITHIN THESE DOCUMENTS IS THE PROPERTY OF GRAF STUDIO, LLC AND SHALL NOT BE COPIED WITHOUT PRIOR EXPRESS WRITTEN CONSENT.

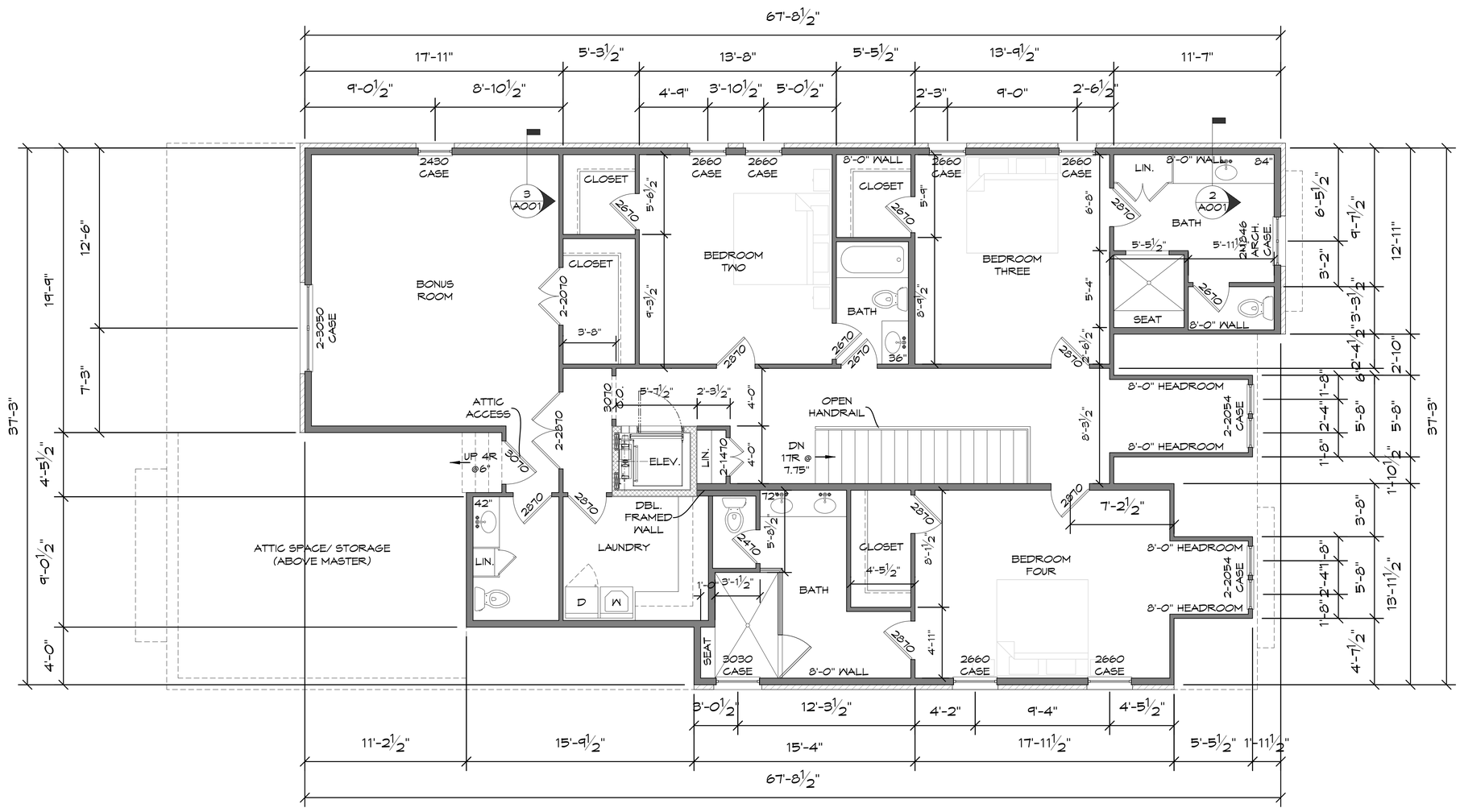

1117 HALCYON AVE
NASHVILLE, TN 37204

REVISIONS:

WALL LEGEND
NEW CONSTRUCTION

WOOD STUD

BRICK VENEER

1 A103 UPPER LEVEL PLAN
SCALE: 3/16" = 1'-0"

0' 10' 30'

JOB NUMBER:	N/A
CHECKED BY:	
CLIENT:	P: E:
DATE:	03-20-2026
PROJECT STATUS:	DESIGN/BID/REVIEW

UPPER LEVEL PLAN

SHEET 07 A-103

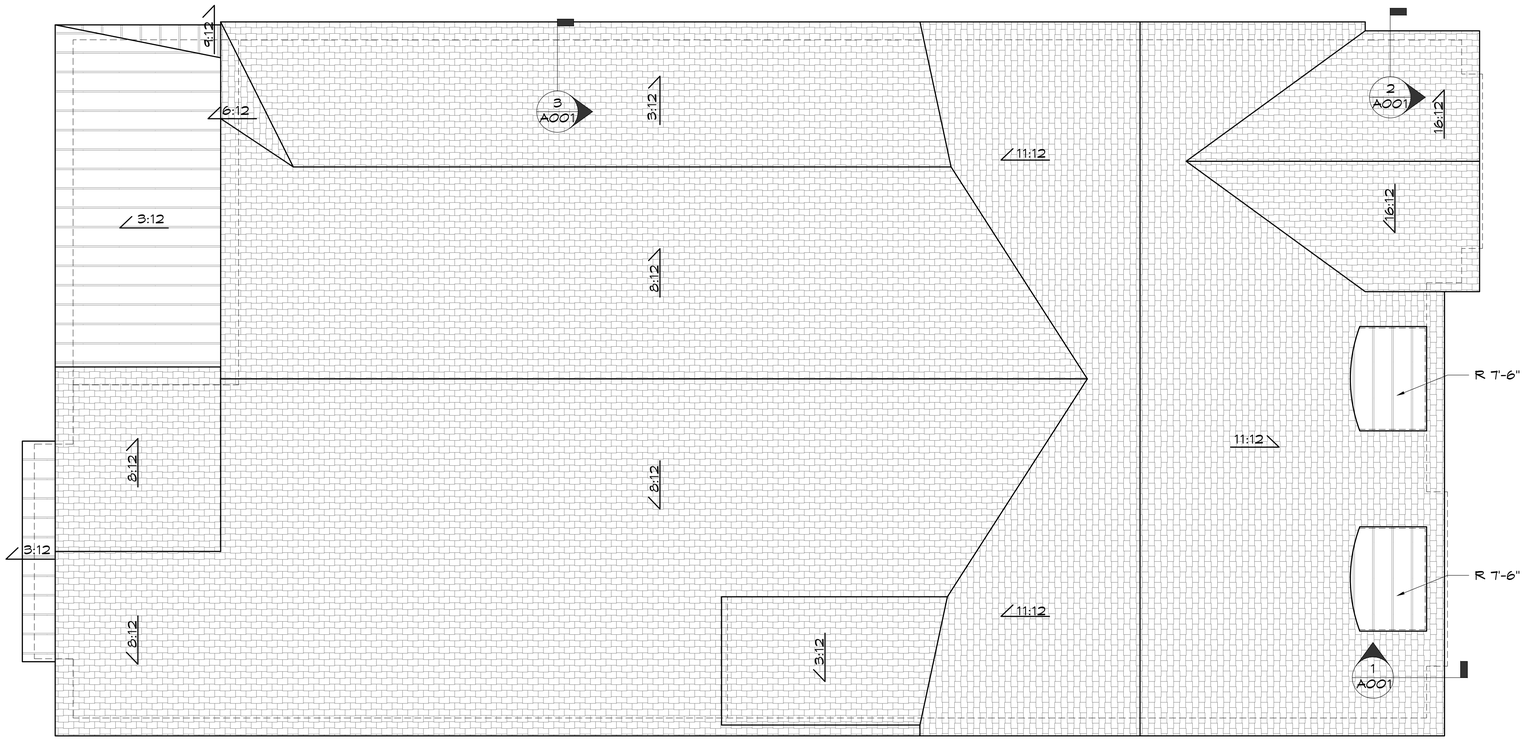

WALL LEGEND
NEW CONSTRUCTION

ASPHALT SHINGLES

STANDING SEAM METAL ROOF

1 A104 ROOF PLAN
SCALE: 3/16" = 1'-0"

0' 10' 30'

graf studio
P.O. BOX 743
FRANKLIN, KY 42135
(270) 991 - 7345
leeross@thegrafstudio.com

DISCLAIMER:

ALL WORK SHALL CONFORM TO LOCAL, STATE AND FEDERAL BUILDING CODES.

ALL INFORMATION CONTAINED WITHIN THESE DOCUMENTS IS THE PROPERTY OF GRAF STUDIO, LLC AND SHALL NOT BE COPIED WITHOUT PRIOR EXPRESS WRITTEN CONSENT.

1117 HALCYON AVE
NASHVILLE, TN 37204

REVISIONS:

JOB NUMBER:	N/A
CHECKED BY:	
CLIENT:	P: E:
DATE:	03-20-2026
PROJECT STATUS:	DESIGN/BID/REVIEW

ROOF PLAN

SHEET 08 A-104

MATERIAL LEGEND
NEW CONSTRUCTION

- ASPHALT SHINGLES (PER OWNER)
- STONE VENEER (PER OWNER)
- BRICK VENEER (PER OWNER)
- STANDING SEAM METAL ROOF
- HARDIE SIDING (PER OWNER)

ELEVATION NOTES

1. PAINTED FASCIA (TYPICAL)
2. GAS LANTERNS (PER OWNER)
3. PAINTED BRICK POCKET (TYPICAL)
4. OPEN HANDRAIL (TYPICAL)
5. BRICK GABLE VENT INSET
6. BRICK SOLDIER
7. FOUNDATION/FOOTING BELOW GRADE (COORD. W/ CIVIL)

NOTE:

AVERAGE GRADE HEIGHT IS -5.175' F.F.E.

1 A201 FRONT ELEVATION
SCALE: 3/16" = 1'-0"

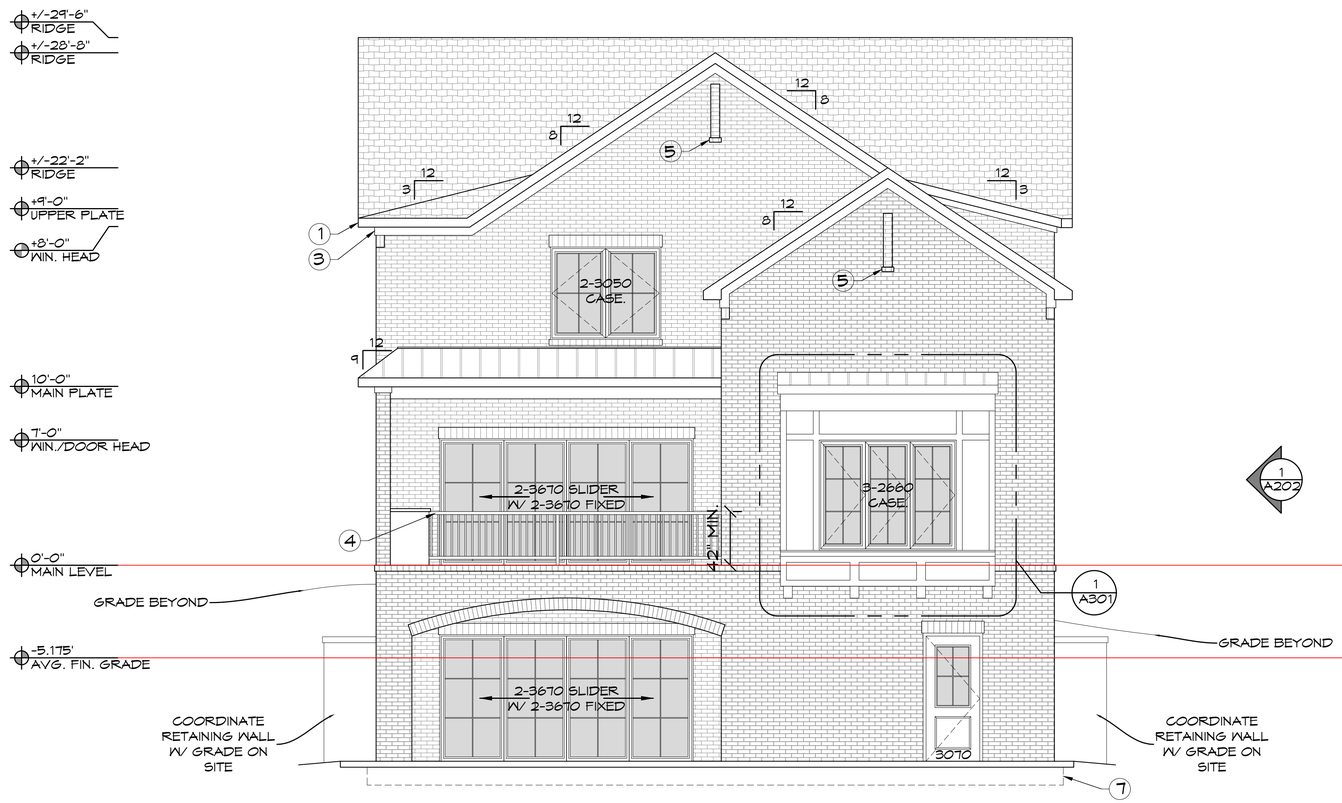

2 A201 REAR ELEVATION
SCALE: 3/16" = 1'-0"

0' 10' 30'

NOTE: COORDINATE VENEER LEDGE IN FIELD W/ CLIENT MASONRY SELECTION

graf studio
P.O. BOX 743
FRANKLIN, KY 42135
(270) 991 - 7345
leeross@thegrafstudio.com

DISCLAIMER:

ALL WORK SHALL CONFORM TO LOCAL, STATE AND FEDERAL BUILDING CODES.

ALL INFORMATION CONTAINED WITHIN THESE DOCUMENTS IS THE PROPERTY OF GRAF STUDIO, LLC AND SHALL NOT BE COPIED WITHOUT PRIOR EXPRESS WRITTEN CONSENT.

1117 HALCYON AVE NASHVILLE, TN 37204

REVISIONS:

JOB NUMBER:	N/A
CHECKED BY:	
CLIENT:	P: E:
DATE:	03-20-2026
PROJECT STATUS:	DESIGN/BID/REVIEW

FRONT & REAR ELEVATIONS

SHEET 09 A-201

MATERIAL LEGEND
NEW CONSTRUCTION

- ASPHALT SHINGLES (PER OWNER)
- STONE VENEER (PER OWNER)
- BRICK VENEER (PER OWNER)
- STANDING SEAM METAL ROOF
- HARDIE SIDING (PER OWNER)

ELEVATION NOTES

1. PAINTED FASCIA (TYPICAL)
2. GAS LANTERNS (PER OWNER)
3. PAINTED BRICK POCKET (TYPICAL)
4. OPEN HANDRAIL (TYPICAL)
5. BRICK GABLE VENT INSET
6. BRICK SOLDIER
7. FOUNDATION/FOOTING BELOW GRADE (COORD. W/ CIVIL)

NOTE:

AVERAGE GRADE HEIGHT IS -5.175' F.F.E.

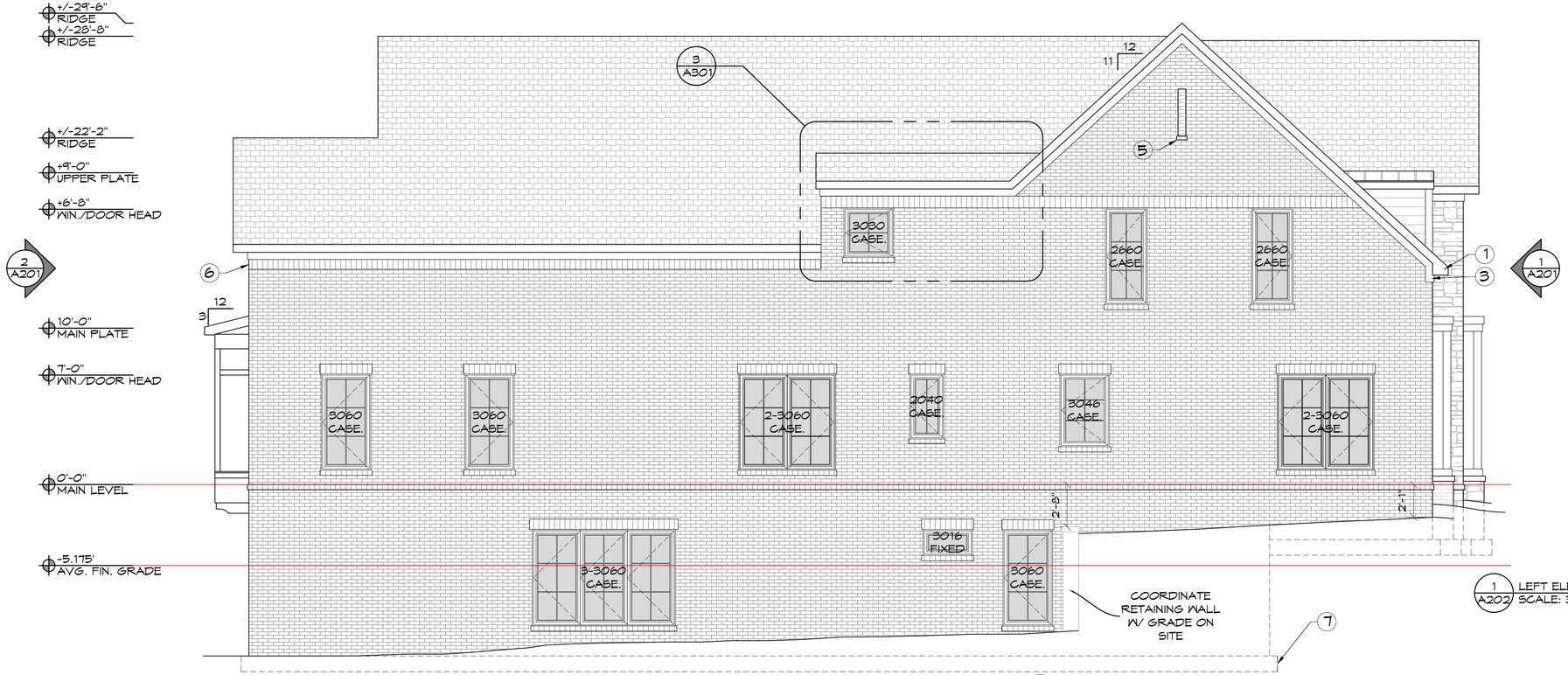

1 A202 LEFT ELEVATION
SCALE: 3/16" = 1'-0"

2 A202 RIGHT ELEVATION
SCALE: 3/16" = 1'-0"

0' 10' 30'

NOTE: COORDINATE VENEER LEDGE IN FIELD W/ CLIENT MASONRY SELECTION

graf studio
P.O. BOX 743
FRANKLIN, KY 42135
(270) 991 - 7345
leeross@thegrafstudio.com

DISCLAIMER:

ALL WORK SHALL CONFORM TO LOCAL, STATE AND FEDERAL BUILDING CODES.

ALL INFORMATION CONTAINED WITHIN THESE DOCUMENTS IS THE PROPERTY OF GRAF STUDIO, LLC AND SHALL NOT BE COPIED WITHOUT PRIOR EXPRESS WRITTEN CONSENT.

1117 HALCYON AVE NASHVILLE, TN 37204

REVISIONS:

JOB NUMBER:	N/A
CHECKED BY:	
CLIENT:	P: E:
DATE:	03-20-2026
PROJECT STATUS:	DESIGN/BID/REVIEW

LEFT & RIGHT ELEVATIONS

SHEET 10 A-202

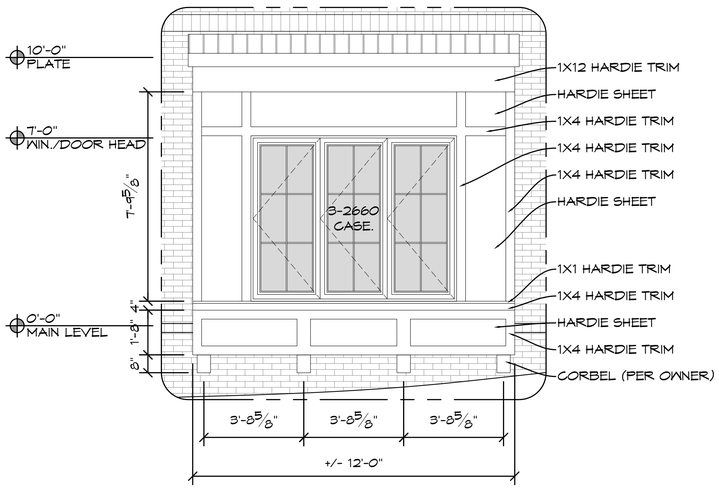

1 A301 BAY ENLARGEMENT
SCALE: 3/8" = 1'-0"

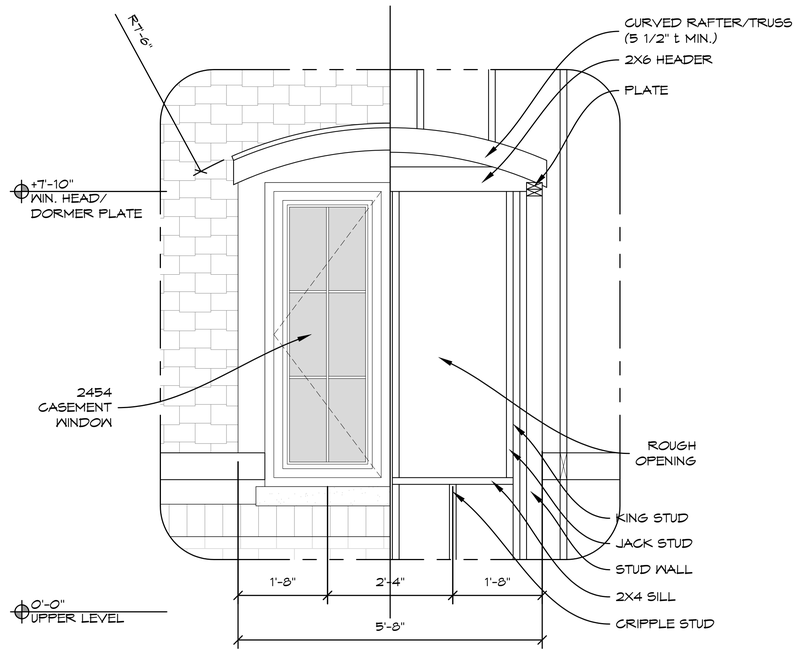

2 A301 PROPOSED DORMER DETAILS
SCALE: 3/4" = 1'-0"

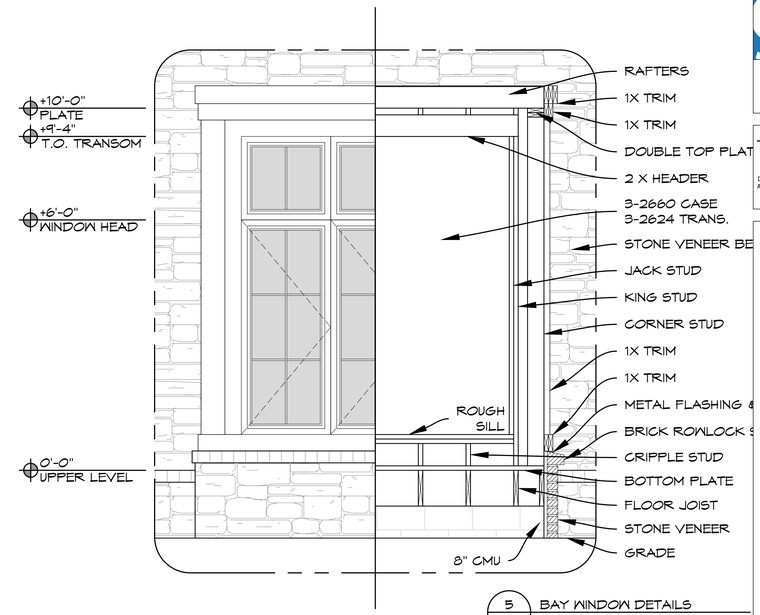

5 A301 BAY WINDOW DETAILS
SCALE: 1/2" = 1'-0"

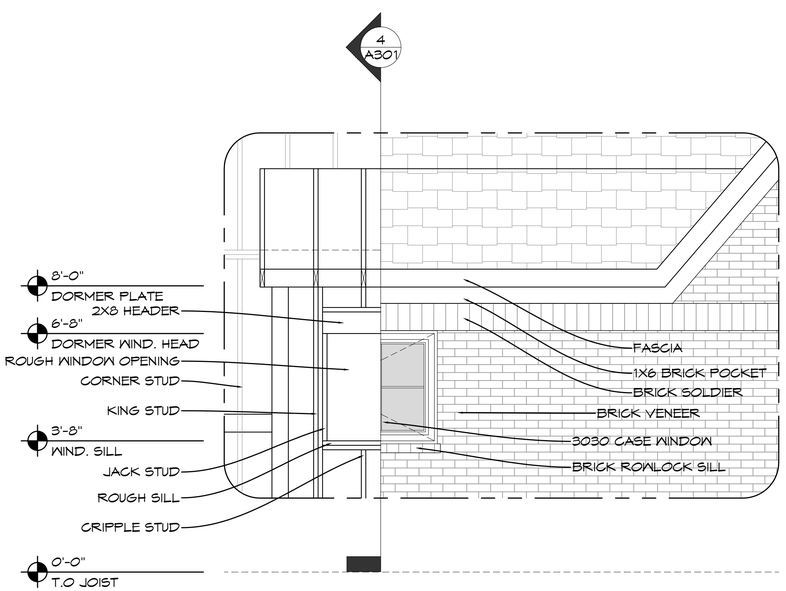

3 A301 DORMER SECTION
SCALE: 1/2" = 1'-0"

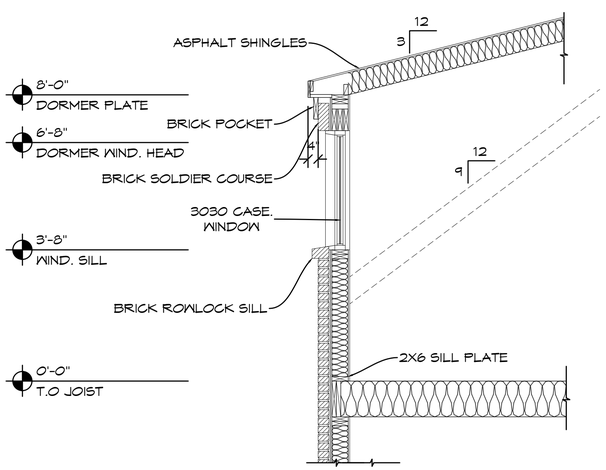

4 A301 DORMER SECTION
SCALE: 1/2" = 1'-0"

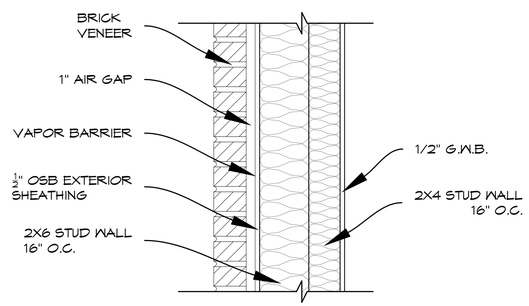

6 A301 DBL. FRAMED WALL SECTION
SCALE: 1-1/2" = 1'-0"

graf studio
P.O. BOX 743
FRANKLIN, KY 42135
(270) 991 - 7345
leeross@thegrafstudio.com

DISCLAIMER:
ALL WORK SHALL CONFORM TO LOCAL, STATE AND FEDERAL BUILDING CODES.
ALL INFORMATION CONTAINED WITHIN THESE DOCUMENTS IS THE PROPERTY OF GRAF STUDIO, LLC AND SHALL NOT BE COPIED WITHOUT PRIOR EXPRESS WRITTEN CONSENT.

1117 HALCYON AVE
NASHVILLE, TN 37204

REVISIONS:

JOB NUMBER:	N/A
CHECKED BY:	
CLIENT:	P: E:
DATE:	03-20-2026
PROJECT STATUS:	DESIGN/BID/REVIEW

DETAILS

SHEET 11 A-301

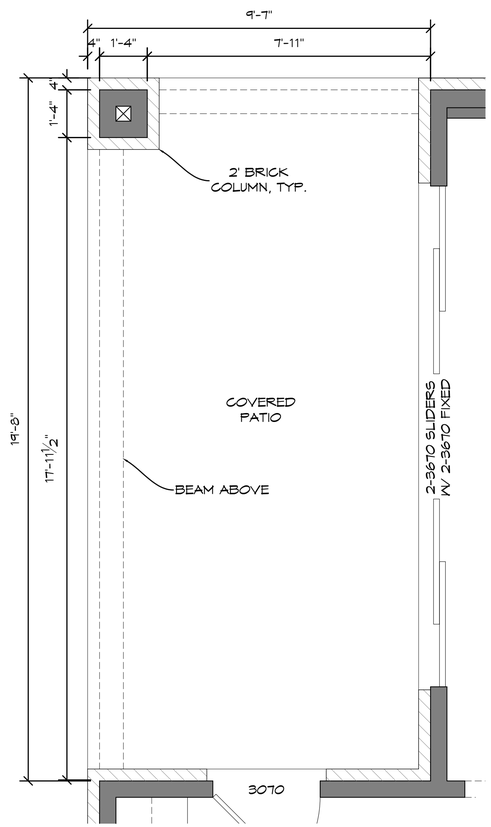

1 A302 REAR PATIO ENLARGEMENT
SCALE: 1/2" = 1'-0"

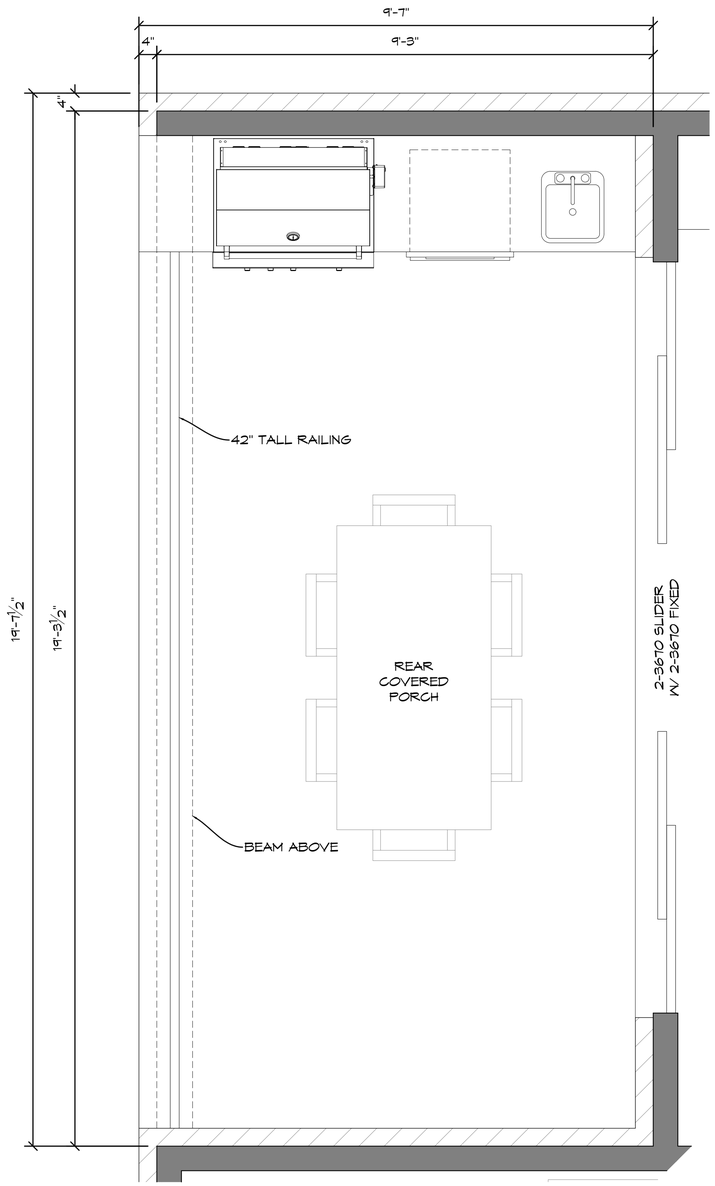

2 A302 REAR PORCH ENLARGEMENT
SCALE: 3/4" = 1'-0"

WALL LEGEND
NEW CONSTRUCTION

WOOD STUD

BRICK VENEER

graf studio
P.O. BOX 743
FRANKLIN, KY 42135
(270) 991 - 7345
leeross@thegrafstudio.com

DISCLAIMER:
ALL WORK SHALL CONFORM TO LOCAL, STATE AND FEDERAL BUILDING CODES.

ALL INFORMATION CONTAINED WITHIN THESE DOCUMENTS IS THE PROPERTY OF GRAF STUDIO, LLC AND SHALL NOT BE COPIED WITHOUT PRIOR EXPRESS WRITTEN CONSENT.

1117 HALCYON AVE
NASHVILLE, TN 37204

REVISIONS:

JOB NUMBER:	N/A
CHECKED BY:	
CLIENT:	P: E:
DATE:	03-20-2026
PROJECT STATUS:	DESIGN/BID/REVIEW

ENLARGEMENTS

SHEET 12 A-302