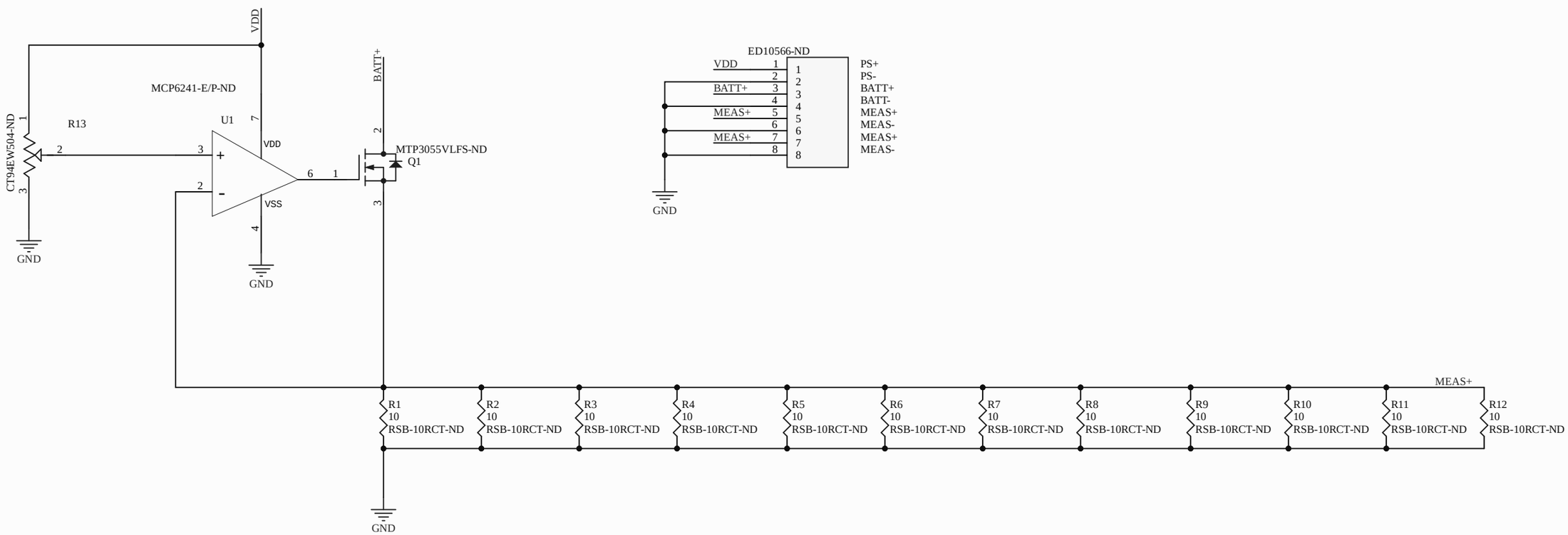

Title		
Size B	Number	Revision
Date: 11/11/2021		Sheet of
File: E:\ART\..\ElectronicLoad.SchDoc		Drawn By: