Society V1: Prototype

Evan Levy

December 2025

Abstract

Society V1 is a hybrid of art, technology, political science, sociology, and mathematics: a tangible instrument that lets the user feel what is typically limited to cognitive imagination.

A 3D-printed control panel houses 42 motorized sliders, each tied to a real-world variable: Crime, Agriculture, Equality, Innovation, Authoritarianism, Addiction, and many others. Move one and the rest react. Some rise, some fall, some hesitate; all according to weighted, non-linear connections derived from published data and shaped by decades of observed societal behavior.

What begins as a single adjustment cascades through the network, revealing how fragile, elastic, and sometimes chaotic complex systems truly are. Solving one problem can often be at the expense of two new ones elsewhere. This is the dance of order and chaos that governs every society.

The prototype exposes only five active channels for economic reasons, yet the entire model is already complete in software: a 42×42 influence matrix, damped echo propagation, composite hidden variables, and various indicators.

This document describes the design, electronics, firmware, and mathematical foundations of Society V1. Above all, the machine is meant as art; but it is also an instrument, a transformer engine, an arbitrary society calculator, and, at times, an uncomfortable mirror.

The 42 Variables

1. Addiction
2. Agriculture
3. Authoritarianism
4. Birthrate
5. Corruption
6. Cost of Living
7. Crime
8. Death-rate
9. Discrimination
10. Diversity
11. Education Access
12. Education Cost
13. Education Quality
14. Employment Rate
15. Energy Production
16. Equality
17. Family Values
18. Freedom of Speech
19. Gun Rights
20. Healthcare Access
21. Healthcare Cost
22. Healthcare Quality
23. Homelessness
24. Immigration
25. Infrastructure
26. Innovation
27. Law Enforcement
28. Liberty
29. Market Freedom
30. Mental Health
31. Military Budget
32. Minimum Wage
33. Pollution
34. Poverty
35. Public Trust
36. Purpose/Meaning
37. Religion
38. Sickness/Disease
39. Taxes
40. Technology
41. Transportation
42. Welfare Support

Figure 1: Front panel; "Crude Prototype"
5 channels, each with a motorized slider, button, and OLED display. On the top-left is a rotary encoder with built-in press down switch.

Example Scenario

Action: The slider labeled "Crime" is moved down by 10%.
"Public Trust" slides upward, responding inversely.
"Homelessness" and "Law Enforcement" both move slightly down.
"Corruption" decreases through a nonlinear soft-clip function; strong at first, then tapering off.
Second-degree connections move: "Employment Rate" and "Mental Health" adjust.
After a few seconds, the motion fades and the system rests.
The stress indicator shows a slight decrease.
A new equilibrium has formed.

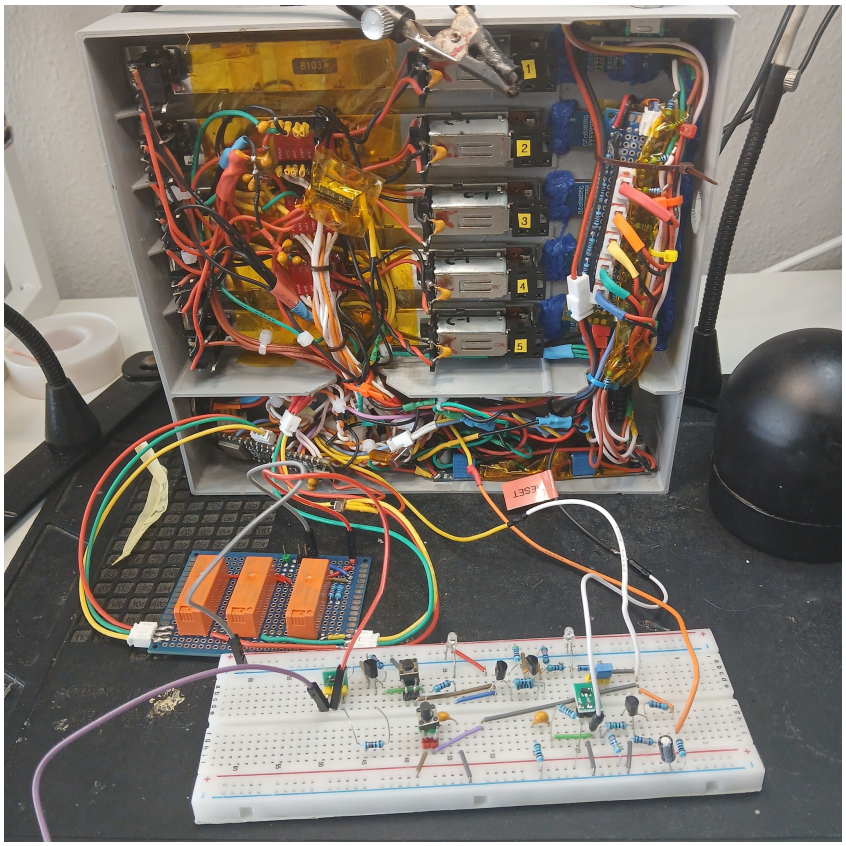

Figure 2: Rear panel, internal components
Bottom: A breadboard configuration of the strapping-isolation circuit allowing use of ESP32 strapping pins. See "STBY/RST Kill-Switch with Latching Strapping-Pin Isolation" section.

Physical Construction

Society V1's culminated vision is a large, expressive panel of 42 motorized sliders that will be a living map of influence in motion. Due to economic constraints, a 5 channel prototype will be constructed as a proof-of-concept.

The *Prototype* enclosure is designed in Fusion360 and 3D printed. The front panel has five channels in a tight grid consisting of motorized sliders that can be programmed and mapped to any of the 42 slider subjects. Each motorized slider assemblage consists of a linear potentiometer and a DC motor, coupled together by a rubber drive belt.

Each of the five channels has a push button and an OLED screen. The OLED's will display the assigned society subject and data readout of the slider positions.

To program: press the button next to the slider you want to designate, turn the rotary encoder to select a subject, press the rotary down, and start sliding society.

A flip switch on the side connects the 9V DC barrel input to two internal buck converters:

- 5V rail for Motors and H-bridge Drivers.
- 3.3V rail for I^2C, TTL, MCU, and displays.

An internal heartbeat LED blinks to show the idle rhythm of the system.

Embedded System and Control Logic

Society V1 uses an **ESP32-C6** microcontroller as a central processor. It is the brain and heart of the system, responsible for reading sensors, driving motors, updating displays, and running the influence engine.

The potentiometer wiper (variable pin) for each slider is connected to an analog GPIO (ADC) for continuous voltage reading. The readings are normalized and used as feedback in the motor control loop and as the input vector for the Society model.

The motors are powered with dual H-bridge drivers (TB6612FNG), allowing smooth, bidirectional control and back-drive detection when a slider is moved by hand.

The OLED displays are connected through a PCA9548A I^{2}C multiplexer, allowing multiple devices with identical addresses to share the same I^{2}C bus and conserving GPIO resources on the MCU.

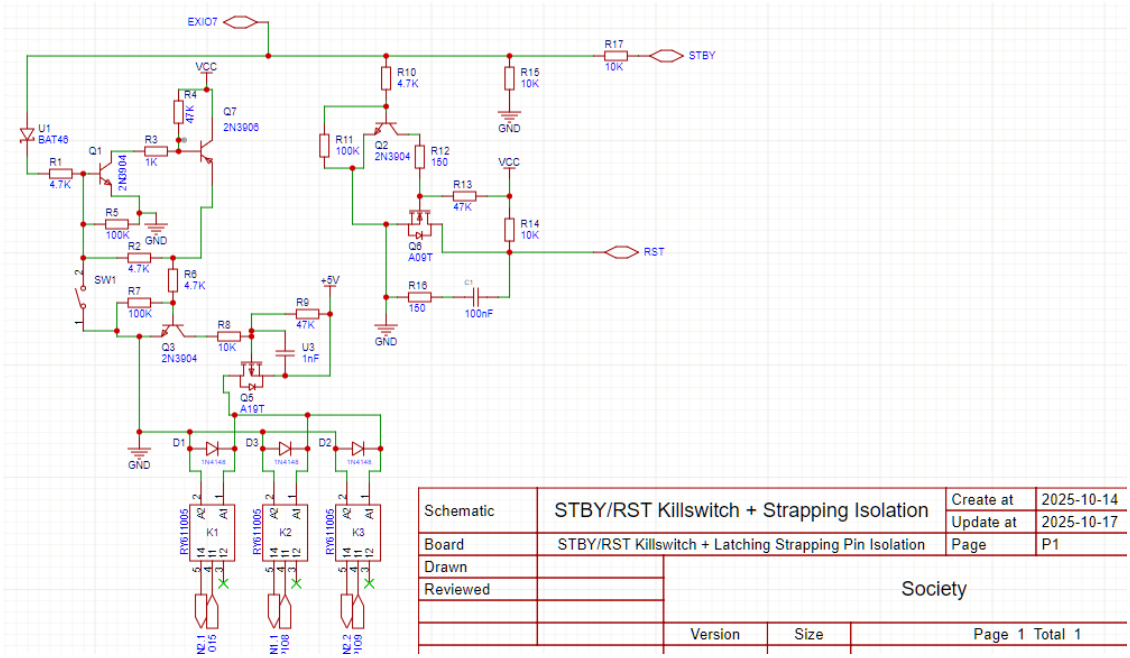

STBY/RST Kill-Switch + Latching Strapping-Pin Isolation

A circuit solution was designed to solve two problems. First, only one GPIO pin was available to function as a kill-switch for both the PCA9548A's RESET and the 3 TB6612FNG's STBY pins. These devices require different signal behaviors: RESET is open-drain, while STBY is TTL HIGH. This circuit allows one GPIO pin (labeled: "KS") to safely manage both devices simultaneously.

Secondly, the KS pin drives a transistor latch circuit controlling three relays that mechanically isolate the ESP32's strapping pins during boot, preventing external circuitry from interfering with boot configuration. On power-up, a brief HIGH signal engages the latch, reconnecting the strapping pins to their respective circuits; once latched, this signal becomes sacrificial and is no longer required. The GPIO can then be reused to enable or disable the I^{2}C multiplexer and motor drivers as needed, making the circuit both space efficient and highly functional.

Software Architecture

The firmware on the **MCU** (ESP32-C6) is written in C++ and structured into 4 layers:

- **Input layer:** Slider's potentiometer positions, rotary encoder, switch/button states, and manual user movements.
- **Motor layer:** Handles transitions and positioning using velocity ramps.
- **Display layer:** Renders slider names, stress, and echo degree to OLEDs.
- **Engine layer:** Implements the influence network, node functions, and echo propagation.

Data is stored locally as arrays in the MCU's flash memory; however, future versions will sync over MQTT to a host server, which will store backups, analytics, and external visualization tools.

Each slider state is normalized to a range $[0, 1]$. All influence weights, node parameters, and baseline presets (such as the reference year "2025") are loaded at boot. These will be explained more in detail in later sections.

Influence Matrix

Every calculation for slider changes is driven by an influence matrix, stored and editable as a spreadsheet. This matrix serves as the map of how each slider affects the others. The top row represents the *influencers*, and the leftmost column represents the *responders*. Each cell value A_{ij} defines the magnitude and polarity of influence from slider j to slider i, normalized to a range between -1 and 1.

The spreadsheet allows for the network to be tuned easily, modified, and recompiled into firmware for testing. Every non-zero cell corresponds to a directed edge in the system's graph, interpreted through the aforementioned node functions.

Each value in the influence matrix is informed by real research. For every interaction, at least one published study or dataset has been referenced to establish the general relationship (positive, negative, or neutral). The exact magnitude of influence is interpreted and normalized by me, so these numbers are not absolute truths but approximations of observed tendencies.

This makes the matrix both scientific and creative: a living map that can be refined, debated, and evolved as new data and perspectives emerge.

		Addiction	Agriculture	Authoritarianism	Birthrate	Corruption	Cost of Living	Crime
2	Addiction	1	0.05	0.08	0	0	0	0.21
3	Agriculture	-0.08	1	-0.15	0.05	-0.1	0	-0.16
4	Authoritarianism	0	0.14	1	0	0.16	0	0.11
5	Birthrate	-0.16	0.13	0	1	0	-0.13	-0.15
6	Corruption	0	0	0.3	0	1	0	0.33
7	Cost of Living	0.19	-0.16	0	0.04	0.18	1	0.12
8	Crime	0.3	-0.13	-0.07	0	0.24	0.02	1
9	Deathrate	0.31	0.14	-0.13	-0.02	0.21	0	0.4
10	Discrimination	0	0.12	0.27	0	0.25	0	0
11	Diversity	0	0.11	-0.2	0	0	0	0

*The influence matrix values shown above represent a working model and are subject to change.

Research Repository

The research repository contains notes, linked studies, and supporting material for each influence node in the system. It serves as a transparent reference for how relationships were interpreted and weighted, and is meant to evolve as new data or perspectives are added.

Composite Variables **(Hidden Layers)**

Although users can interface with any of the 42 slider variables, several of these variables also represent deliberate aggregations of more granular real-world dimensions. These hidden sub-variables, or *Composite Variables*, are never directly accessible to the user, yet they contribute weighted terms inside the influence engine. This approach keeps the interface focused and playable while preserving nuance and fidelity to research.

Taxes: Internally modeled as a composite of Income, Capital-gains, Corporate, Sales, Property, and Inheritance/Estate tax systems. When the user moves the single "Taxes" slider, all sub-components shift in lockstep. However, when Taxes is influenced by other sliders (e.g., Welfare Support, Authoritarianism, or Market Freedom), each sub-tax responds with its own magnitude and shaping function derived from historical and econometric data.

Equality: Combines economic equalities (Gini and Wealth Distribution) with social equality dimensions including Gender, LGBTQ+ Rights, and Disability Inclusion. Studies on wage gaps, representation, and legal protections are folded into the incoming and outgoing weights of this node.

Discrimination: A broad prejudice axis that internally weights Racial, Ethnic, Religious, and (to a lesser degree) Gender based discrimination. This prevents the panel from becoming a culture war checklist while still allowing realistic downstream effects on Social Tension, Mental Health, Public Trust, and Innovation.

Cost of Living: Internally driven by costs of Housing, Food, Energy, Healthcare, Taxes and Education each with its own research-backed sensitivity.

Baseline Presets

The *Baseline* represents the "ground floor" of the working society model. It is the arbitrary default point with the lowest systemic stress. Any deviation from this baseline introduces measurable tension that can cascade into larger, interconnected effects.

The baseline presets are designed to represent a "snapshot of society". It is the state of *all* variables at a particular time or under specific conditions. The default preset, *"2025"*, models a general vector state of America in the year 2025, but others can be loaded as well: *"WWII Germany"*, *"Rome: 59 BC"*, *"North Korea"*, *"England: 700 AD"*, etc.

There can also be more fun and creative presets: *"Coruscant (Star Wars)"*, *"Zombie Apocalypse"*, *"Modern Civil War"*, *"Nuclear Holocaust"*, and so on.

Stress Function

The "stress" value measures how far the system has drifted from the baseline:

$$\text{Stress} = 100\left(1 - e^{-\frac{1}{\kappa}\sum_i w_i (s_i - s_i^{(0)})^2}\right),$$

Where w_i is an optional importance weight and κ controls sensitivity.

Mathematical Core

At the heart of the project is the influence network. Each of the forty-two sliders represents a state variable:

$$\mathbf{s} = [s_0, s_1, s_2, \ldots, s_{41}]^\mathsf{T}, \quad s_i \in [0, 1].$$

The baseline configuration is called $\mathbf{s}^{(0)}$, representing a neutral state.

When you move one slider, the change $\Delta\mathbf{s}^{(0)}$ propagates across a directed graph with weighted edges A_{ij}. Each connection $j \to i$ has its own function f_{ij}, defining the shape of its response. This is the Influence Formula:

$$\Delta s_i = \sum_{j=1}^{N} f_{ij}\big(A_{ij}\,\Delta s_j\big).$$

The node functions f_{ij} can represent many types of relationships:

$$f_{ij}(x) = \begin{cases} x, & \text{linear (simple correlation)} \\ \tanh(kx), & \text{softclip (smooth saturation)} \\ \dfrac{1}{1+e^{-k(x-\mu)}} - \frac{1}{2}, & \text{sigmoid (threshold)} \\ \max(0, x), & \text{ReLU (one-way activation)} \\ |x|^p \operatorname{sign}(x), & \text{power law (nonlinear scaling).} \end{cases}$$

Explanation: The *Influence Formula* is how each change in slider variable influences others. The vector $\mathbf{s}$ represents the 42 sliders, each holding a value between 0 and 1. Together, they all make up the current "state of society." The baseline $\mathbf{s}^{(0)}$ is the neutral point; the default configuration that defines balance and minimal stress (see "Baseline Presets" section).

When a slider moves, it doesn't exist in isolation. The change $\Delta\mathbf{s}^{(0)}$ travels through a web of directed relationships defined by the matrix A_{ij}. Each value A_{ij} describes how much one slider influences another, and whether that influence is positive or negative. The function f_{ij} defines the *shape* of that relationship. For example, if it's linear, saturating, one-sided, or nonlinear. We can manipulate it in any way that makes the most sense and reflects the available research.

For example, a linear function is when one slider's movement directly mirrors another. Move Corruption *up*, public trust falls *down*, but in the same amount. A sigmoid curve could represent thresholds, such as how innovation only increases once education quality crosses a certain level. A ReLU or power-law node can capture asymmetric behaviors, where one direction reacts strongly, while the opposite side responds more subtly.

Synthesizing the influence matrix A with the nonlinear node functions f_{ij} produces a more lifelike system; it is organic, elastic, and expressive, rather than a rigid mechanical model. It's this interplay between structure and function that gives *Society V1* its pulse.

Extended Slider Influence Model Including Rank-3 and Rank-4 Interaction Terms:

$$\Delta x_i = \sum_{j=1}^{N} A_{ij}\,\Delta x_j + \sum_{j=1}^{N}\sum_{k=1}^{N} B_{ijk}\, f_{jk}(\Delta x_j, \Delta x_k) + \sum_{j=1}^{N}\sum_{k=1}^{N}\sum_{l=1}^{N} C_{ijkl}\, g_{jkl}(\Delta x_j, \Delta x_k, \Delta x_l) + \ldots$$

Higher-rank interaction terms (three-way and four-way influences) are currently treated as a theoretical extension of the model; they are not used in the prototype engine, but are intended for the future "Complete" version, where more complex societal feedback loops can be explored.

Echo Function

After we calculate the influence for a user's input (moving a slider), we need to find a balance in the effect responses, or else there will be a feedback loop. Because the system is a dense network of sliders with varying influence branches, some sliders affect certain others while remaining independent from the rest. Sliders that directly influence another are called *first-degree connections*. Once those sliders move into position, each activates its own network of secondary influences. To prevent runaway amplification, the cascade is dampened through controlled echoes or ripples.

First-degree interactions naturally have the full strength of their influence, but second-degree interactions occur at half proportion, and each subsequent degree continues to fade until reaching a null threshold, becoming idle. We can adjust the value of α to make the echoes last longer or shorter, depending on how reactive or stable we want the system to feel:

$$\Delta \mathbf{s}^{(k+1)} = \alpha^k \, \mathcal{F}(A, f) \, \Delta \mathbf{s}^{(k)}, \quad 0 < \alpha < 1.$$

Explanation This equation describes how changes propagate through the network over time. Each term $\Delta \mathbf{s}^{(k)}$ represents the system's state change during the k-th echo. The operator $\mathcal{F}(A, f)$ applies the influence matrix A and the node functions f_{ij} that define the behavior of each connection. The scalar α acts as a damping coefficient that reduces the magnitude of influence at each successive iteration.

When $k = 0$, the user's direct input moves the first-degree sliders at full strength. When $k = 1$, the next degree responds at α of that strength, and so on, forming a geometric decay. Because $0 < \alpha < 1$, the sequence of echoes converges naturally to equilibrium, ensuring that movement fades smoothly rather than looping infinitely.

In practice, adjusting α changes how "alive" or "stable" the system feels. A higher α (e.g., 0.8) allows longer, softer ripples, while a lower α (e.g., 0.3) produces quick, controlled reactions. This is what gives the motion of *Society V1* its organic rhythm- responsive, expressive, yet always returning to rest.

Closing Thoughts

Society V1 sits between logic and intuition. It's an engineered sculpture that obeys math but feels organic. Every slider is a variable, a reaction, and a question with the feeling of interfacing with Nature.

There are 42 sliders for now, but that may change as the design evolves; more may be added, and I hope I can make it insightful.

It's not meant to be right, nor to make any final statement about society. It's meant to reveal how fragile and fascinating systems become when all the parts start talking to each other.

Society itself is a dynamic system, too often critiqued from a single dimension and rarely appreciated for the balance constantly at play. *Society V1* is my attempt to build an arbitrary "society calculator", a tool for exploring connection, consequence, and equilibrium.