Socio-Economic Planning Sciences 93 (2024) 101904

Contents lists available at ScienceDirect

Socio-Economic Planning Sciences

journal homepage: www.elsevier.com/locate/seps

Digital divide, gender gap, and entrepreneurial orientation: How to foster technology adoption among Pakistani higher education students?

Cristian Barra [a,*], Mara Grimaldi [b], Amina Muazzam [c], Orlando Troisi [d], Anna Visvizi [e,f]

[a] Department of Economics and Statistics, University of Salerno, Italy
[b] Department of Business Sciences Management & Innovation Systems, University of Salerno, Italy
[c] Lahore College for Women University, Lahore, Pakistan
[d] Department of Political and Communication Sciences, University of Salerno, Italy
[e] SGH Warsaw School of Economics, Warsaw, Poland
[f] Effat University, Jeddah, Saudi Arabia

ARTICLE INFO

Keywords:
Digital divide
Gender gap
Technology adoption
Entrepreneurial orientation
UTAUT
MGA
SEM

ABSTRACT

Advances in Information and Communication Technology (ICT) bear the promise of multiple benefits, including individual and entrepreneurial empowerment. The prospect of harnessing ICT as a means of creating growth and development opportunities is particularly appealing in developing countries. Still, several factors, including digital illiteracy and gender inequality, hamper the possibility of effective and universal utilization of these opportunities, in extreme cases leading to digital divide, gender-based exclusion, poverty, and precarity. Using this observation as a springboard, the objective of this paper is to conceptualize and quantify the digital divide-gender-entrepreneurial orientation nexus as it emerges in the perception of Pakistan higher education students. Using a quantitative approach, this study identifies the impact of digital skills (and thus the knowledge inequalities that can determine the potential digital gap) on entrepreneurship-related technology adoption (as measured through Unified Theory of Acceptance and Use of Technology, UTAUT), whereby gender is treated as a moderator. The empirical findings, based on Structure Equation Modelling (SEM) and Multiple Group Analysis (MGA), show that digital skills and perceptions of technology capabilities have a substantial impact on the desire to use ICT in entrepreneurial activities. The influence of technology adoption intent on the development of entrepreneurial orientation is also confirmed. This paper adds to the broader debate on gender, digital divide and entrepreneurship. Importantly, by identifying some of the drivers behind students' technology adoption in a developing nation such as Pakistan, filled with technological and economic unbalances, the conclusions of this study will have conceptual, managerial, and policymaking applications, notably in terms of technological access, digital literary, and gender-based exclusion.

1. Introduction

The mounting technological evolution and the digitalization of social interactions, business and economy, force companies to preserve competitive advantage and to keep pace with the introduction and the adoption of new technologies.

Despite the opportunity provided by technology, research reveals that a number of impediments can limit successful exploitation of the benefits of digitalization [1,2]. The literature has referred to the unequal dissemination and acceptability of digital technology as the "digital divide" [3,4] to evaluate the socioeconomic repercussions of discrepancies in technology access. While the literature suggests that the digital divide is a result of technological progress [5], it should be noted that it is also influenced by inefficient and ill-targeted economic policies, the implications of the centre-periphery relationship, and - to a lesser extent - cultural factors, education patterns, and managerial practices.

Gender divide has an impact on Information and Communication Technology (hereafter ICT) availability and use in developing countries. Women are one-third less likely than men to benefit from technology [6]. It is known that the adoption of new technology can have a good impact on well-being and empowerment. As a result, there is a need to investigate women entrepreneurs in rural countries by identifying the

* Corresponding author.
E-mail addresses: cbarra@unisa.it (C. Barra), margrimaldi@unisa.it (M. Grimaldi), amina.muazzam@lcwu.edu.pk (A. Muazzam), otroisi@unisa.it (O. Troisi), avisvizi@gmail.com (A. Visvizi).

https://doi.org/10.1016/j.seps.2024.101904
Received 3 August 2023; Received in revised form 16 April 2024; Accepted 17 April 2024
Available online 24 April 2024
0038-0121/© 2024 The Authors. Published by Elsevier Ltd. This is an open access article under the CC BY license (http://creativecommons.org/licenses/by/4.0/).

factors of ICT adoption and examining how such adoption can lead to an entrepreneurial orientation.

When applied to the context of entrepreneurship and entrepreneurial behavior, the notions of digital divide and gender gap take on a very intriguing twist. For this reason, in this work the prospect of individuals engaging with entrepreneurial activity is directly correlated with their ability to effectively use digital technology. Hence, the study aims at assessing the potential existence of a direct correlation between acquiring certain basic threshold of digital skills-such as PC use, smart devices use, internet use [7] and the individuals' attitude toward considering engaging with entrepreneurial activity [8,9]. Furthermore, the research seeks to determine whether this hypothetical relationship is influenced by an individual's gender identification.

The literature has extensively studied the effects of the digital divide on individuals [10,11] and societies [12,13] in terms of well-being and prosperity.

Extant research, however, seems to treat (abundantly) gender gap, digital divide and entrepreneurship as separate issues [14] risking not adequately exploring the multifaceted nature of a phenomenon that involves not only technological factors (accessibility of technological resources, adequacy of ICT infrastructure, etc.) but also cultural and social determinants (unequal opportunities for women and men, social pressures for women, patriarchal ideology), particularly in developing countries [15]. Moreover, existing studies that analyze the digital divide in developing countries focus on the context of India and South Africa [16] and on the exploration of technological accessibility rather than on socio-cultural issues such as gender discrimination, cultural barriers [17] and inclusive education.

Therefore, it can be interesting to assess the multi-levelled factors that can prevent a full technology adoption in a South Asian country such as Pakistan, in which, despite the infrastructural advancements over the years and the gradual removal of the barriers to technology, the long-term investment in digital education and the equal opportunities for men and women are still missing [18]. As for gender gap, current research shows that the Pakistani social context and the traditional and patriarchal ideology substantially obstruct the development of Pakistani women entrepreneurship [19].

Taking the analysis a step further, it's necessary to investigate the interaction between gender, digital divide, and entrepreneurial orientation in a socially and economically unstable country such as Pakistan [16]. As a result, the aim of this study is to determine the relationship between the digital divide and an individual's propensity to engage in entrepreneurial activities, as well as whether the gender variable can alter the potential correlation between an individual's ability to use digital technology and his or her propensity to engage in entrepreneurial activity.

To examine and test the validity of these hypotheses, this paper focuses on (i) identifying the relevance of the acquisition of the necessary threshold of digital skills and of the willingness to adopt technology on entrepreneurial orientation; (ii) analysing the impact of gender variable on the relationships between digital skills, the acceptance and use of technology, and the development of entrepreneurial orientation. Hence, the study explores the relationship between the possession of digital skills (H1) and of the intention to use and accept technology, measured through Unified Theory of Acceptance and Use of Technology (hereafter UTAUT) from H2 to H5 on entrepreneurial orientation (H6) in a sample of more than 200 female and male Pakistani higher education students (N = 214) enrolled in the last year of economic faculty by considering gender as a moderating variable.

The study's structure is organized as follows. Sections 2 discusses the concepts studied as well as the hypotheses and the research model. Section 3 describes the empirical strategy and data, while Section 4 summarizes the empirical findings. Sections 5 and 6 address the debate and the fundamental economic policy implications, respectively. Section 7 concludes by discussing the study's limitations and future research.

2. Theoretical background: building the research model

2.1. Digital skills and attitude towards technology

The digital divide is the result of disparities in the level of ability required to use digital technology among different social groups (gender, age, income, geographical origin, etc.). The digital divide is the effect of technological advancements. While commonly linked with disadvantaged countries [20,21], the digital divide has several dimensions and is not restricted to developing countries. Indeed, there is a digital difference between countries based on gender, age, and income [22,23].

The impact of digitalization on social, economic and political inequalities poses the need to identify the social groups who are left behind from this process, to detect the negative features of digital transformation and to understand how these drawbacks can be prevented. Detecting the motivations and causes that can lead to an imbalance between individuals who are capable of using technology and those who do not possess the right skills or the right instruments to use technology should redefine the perspective of researchers on digital transformation. Hence, from the individual, entrepreneurial and the policymaking perspective, it is necessary to create conditions drivers at the systemic and individual levels.

As the global digital transformation progresses, the issue of digital gap is inextricably linked to digital inclusion. As a result, the lack of digital competency is particularly noticeable in developing countries, which are already afflicted by socioeconomic inequality [24].

Basically, the digital gap is described as a disparity in two highly related factors: (i) skill level and (ii) physical access to technology. The implicit premise of the digital divide is that without access to technology, it is difficult to build technical skills [23,25].

However, in a society witnessing a digital revolution, a lack of access to technology, as well as the inability to learn skills to use it, adds to deprivation and isolation [26,27]. In a broader sense, the right skills, particularly digital abilities, can boost a company's or even an entire economy's competitiveness, creativity, and resilience [28].

Improving digital skills can have a social, cultural, and economic impact. It can encourage the establishment of new firms and entrepreneurship [8,9]. Modern entrepreneurs must not only learn how to use technology appropriately, but having digital skills may also help them incorporate technology more efficiently into their business objectives and procedures.

As a result, the potential of acquiring some basic levels of digital skills may improve an individual's willingness to explore engaging in entrepreneurial activity [29].

Hence, there is a need to examine if having digital skills and a digital culture may increase technology adoption and, consequently, promote women's entrepreneurial orientation in impoverished countries. Then, we can formulate the following hypothesis.

H1. The ability to use technology in entrepreneurial operations can be influenced by digital skills.

2.2. Technology acceptance and entrepreneurial orientation

Technology can foster entrepreneurship, especially in VUCA (volatility, uncertainty, complexity, ambiguity) times [30]. Digital technologies can influence the creation of new business ventures [31], reduce expenses, and improve profits [32]. ICT and innovation are critical components of entrepreneurial success and the creation of new company possibilities [33]. Adopting ICT intelligently in business management helps lower barriers to entrepreneurship [34].

Few studies have examined the impact of ICT on entrepreneurship in rural areas. [35], who pioneered TAM (the technology acceptance model) and UTAUT, extend the TAM framework to study the impact of IT adoption on entrepreneurship. Furthermore, recent research

recognizes that having the appropriate technical skills, as well as a strategic approach to technology use and data analysis [36], can impact the intention to employ new technologies.

Existing research investigates the impact of the UTAUT model developed by Ref. [35], which consists of expectancy from performance and effort, social influence, and favorable environment, on entrepreneurship and entrepreneurial behavior.

Performance expectancy is defined as the expected benefits for consumers (e.g., in job performance) that can derive from the use of technology in the accomplishment of a given activity.

Effort expectation refers to the ease of use of technology. Social impact is the degree to which customers believe that key individuals (reference groups, family, and friends) believe they should utilize a specific technology. Facilitating conditions are customers' assessment of the resources and infrastructure available to carry out a behavior [35,37,38].

The investigation of the willingness to use technology through a multi-dimensional and validated measurement framework, such as UTAUT, is essential for the identification of the different contextual factors (structural, technological, psychological, social, knowledge-based) that can prevent the adoption of technology in work and daily activities.

UTAUT is one of the most employed models in managerial studies that aim at exploring the different and multi-levelled technological, social, psychological and contextual factors that influence the adoption of technologies in individual and organizational contexts [39–41]. Over time, this measurement framework has been deployed and statistically tested over time in different businesses and research contexts (from automotive [42], tourism [43], and education [44]) and adapted to analyze the use and acceptance of different kinds of technologies (mobile applications, laptops, smartphone, artificial intelligence, etc. [45,46]).

According to some scholars [47], the different enablers of technology adoption intention can affect entrepreneurial orientation. Performance expectancy can enhance entrepreneurs' productivity and help complete tasks quickly. As aforementioned, effort expectation refers to how easy it is to use technology. The degree to which customers believe that key individuals (reference groups, family, and friends) believe they should use a particular technology is known as its social influence. Facilitating conditions are customers' perceptions of the resources and infrastructure accessible to carry out an activity [35,37,38].

Among all the different measurement frameworks that assess individuals' acceptance of and intention to use technology, UTAUT permits to fully explore the multi-layered nature of digital divide. Over time, in fact, three levels of digital divide have been proposed: 1) access divide, related to the accessibility of technology; 2) use divide, the lack of digital skills; 3) quality of use gap, the ability to make good use of technology [48]. Moreover, digital divide is a multi-dimensional construct that envelops technological dimension (accessibility of technological resources, adequacy of ICT infrastructure, etc.) but also cultural (e.g. knowledge, digital attitude) and social variables (unequal opportunities for women and men) [20,23].

Through the combination of technological (effort expectancy, EE), knowledge-based (facilitating conditions, FC) and outcome-based (performance expectancy, PE) dimensions, UTAUT helps taking into account, respectively, individuals' access to technology (first level of divide, which corresponds to EE), the ability to use technology (second level of divide, related to FC) and the impact of technology use on individual productivity (third level of divide, PE).

Moreover, gender can affect entrepreneurial orientation [49,50]. Assessing the impact of technology acceptability on entrepreneurial attitude, as well as the mediating role of gender, is particularly suitable for the Pakistan environment explored in this study. In South Asia, students are discouraged from society, family and other reference groups from pursuing entrepreneurial paths [51]. These barriers not only prevent youth employment but can also contribute to penalize women, whose life decisions are more conditioned and career opportunities are slower [52].

So, the remaining research hypotheses can be formulated as follows.

H2. Performance expectations can influence entrepreneurial attitude.

H3. Expected effort can influence entrepreneurial inclination.

H4. Conducive environments can influence entrepreneurial attitude.

H5. Social influence can have an impact on entrepreneurial inclination.

H6. The aim to adopt new technology can influence entrepreneurial orientation.

2.3. The moderating effect of gender in technology acceptance and entrepreneurial orientation

It might be argued that the general model (shown in Fig. 1) may vary depending on gender. Hence, based on the literature afore mentioned, male and female can have a different attitude toward the use of technology and entrepreneurial orientation.

According to the existing literature on developing countries [53,54], technological change and innovation can be influenced by a variety of moderating factors, ranging from external factors (such as labor market flexibility, product market competition, types of innovation, and international trade) to socio-demographic variables (gender, age, income, etc.).

In extant research, few studies explore the impact of ICT adoption on women entrepreneurship in developing countries. [14,55] demonstrate that gender could influence the constructs of IT adoption. Furthermore, existing research acknowledges that the intention to use new technologies can be impacted by the presence of the necessary technological capabilities, as well as a strategic approach to technology use and data analysis [30].

This study, along with previous research [56,57] and the discussion that led to the formulation of hypotheses, proposes that men and women have distinct perceptions of technological acceptance and entrepreneurial purpose. For this reason, it provides a quantitative analysis to assess whether the difference exists.

Existing research on the role of gender in UTAUT demonstrates that characteristics such as age and gender influence the relationship between antecedents to technology adoption and user attitudes and intentions [40,43].

Gender and age can have an impact on consumer satisfaction, usage rates, and purchase intentions [58]. Several studies have found that men are more likely than women to use technology [59], namely mobile banking services [60]. In general, women are regarded to be more skeptical of technical advancements. For example [61], found that women are more anxious about technology.

As for the effect of gender in the development of entrepreneurial orientation, existing research suggests that gender heterogeneity in management team can contribute to the spread of innovation in the firm and to the assumption of proactive behavior [62,63].

Some studies reveal that gender differences can create relational problems that can obstruct team decision making [64] by leading to different business strategies. If competitive advantage derives from firm's resources and capabilities such as management skills, organizational skills, information and knowledge, it can be notices that entrepreneurial orientation is a management skill that can influence competitive advantage. While access to resources may vary by gender [65,66], the ability to exploit resources can balance the differences between males and females. Hence, some studies show variations between males and females in their levels of entrepreneurial orientation and above all in the attitude to develop risk-taking and innovativeness, which is associated more with female gender.

Furthermore, taking into account the gendered dimension of the

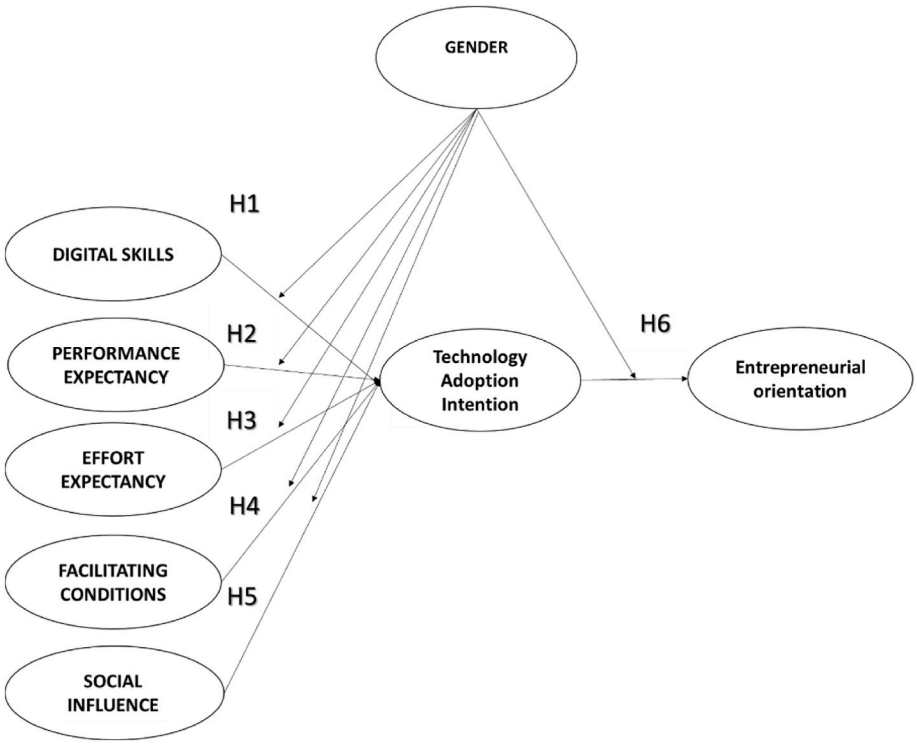

Fig. 1. The research model. Source: authors' elaboration.

digital divide in a developing country like Pakistan [67] allows for simultaneous exploration: (1) the gendered dimension of the digital divide (digital gap through the construct of "digital skills" and gender through the moderating effect); (2) the gendered dimension of entrepreneurship [68]; (3) the specificity of rural context (Pakistani nation is classified as a rural country).

For this reason, as Fig. 1 shows, the empirical research seeks to assess: (i) the relationships between the construct presented in Sections 2.1 and 2.2 (digital skills, technology acceptance and use, entrepreneurial orientation); (ii) the effect of gender as a moderating variable.

3. Empirical strategy

3.1. Survey instrument and measures

In line with the methodology proposed by Refs. [69,70], the three constructs included in the research model have been measured with multiple items to account for the complexity of the phenomena investigated (skills, intention, orientation, etc.) and increase the validity and reliability of the instruments. This procedure has been used to ensure sufficient semantic coverage of the immaterial constructs analyzed, which include psychological, social, and behavioral dimensions.

Following an extensive literature review on the study's fundamental concepts (synthesised in Section 2), a list of 40 items was created. Then, to ensure content validity and purify the scale, the preliminary list of items was administered to a panel of 10 academics familiar with behavioral intention and management research. The experts evaluated the appropriateness of the meaning of each item and the relevance to the corresponding dimension. As a result, 9 items were deleted from the analysis, and the others were reworded for clarity; the final list (as shown in Appendix A) contains 31 items.

The self-administered questionnaire contains items adapted from prior research on the digital divide, gender gap, and entrepreneurship. The measuring items for the construct of digital skills (DS) were developed through extensive empirical research that evaluates the impact of digitalization in higher education contexts to create a digital literacy scale [7,71,72].

In particular, DS1 relates to technological skills, DS2 to personal security skills, DS3 and DS4 to critical skills, DS5 to informational skills.

The sample's entrepreneurs' desire to adopt and apply technology was measured using the classical UTAUT sub-dimensions (performance expectancy (PE), effort expectancy (EE), social influence (SI), facilitating conditions (FC), and behavioral intention (BI), which were adapted from Refs. [35,37].

In detail, the items of PE pertain to the degree to which an individual thinks that using technology would enhance five aspects related to work: performance (PE1), accomplishment of tasks (PE2), effectiveness (PE3), productivity (PE4). EE attempts to examine the degree to which an individual thinks that using technology would be easy, with reference to the following aspects: clear interaction with the system (EE1), possession of adequate skills (EE2), general easiness of use (EE3), easiness of use of a technology for an operational purpose (EE4). SI evaluates individuals' perceptions that they should undertake a specific behavior based on: people influencing their behavior (SI1), people who will change their view if they use technology (SI2), people with a positive perception (SI3), acquaintances (SI4). FC measures individuals' perceptions of constraints and personal resources in the use of technology, such as: personal resources (FC1), comfort in the use of technology (FC2), problems in the use of technology (FC3), communication abilities (FC4). Lastly, BI estimates the intention (BI1), the probability (BI2) and the decision (BI3) to use technology in work activities.

The components for the construct of entrepreneurial orientation (EO) were drawn from Refs. [73–75]] and they refer to the three classical characteristics of EO found in literature: 1) Innovativeness (EO1, EO2); 2) Risk-taking (EO3, EO4); and 3) Proactiveness (EO5, EO6).

Then, after exploratory factor analysis (EFA, see Section 3.3.1), four items were removed from the analysis (DS5 for the construct "digital skills", EE4 for the construct UTAUT and the sub-dimensions "effort expectancy", EO5 and EO6 for the construct "entrepreneurial orientation") due to low factor loadings. In this way, only 27 items were employed to perform confirmatory factor analysis and multiple group analysis.

Finally, the survey included questions about basic demographics such as gender, age, and faculty. The self-administered questionnaire was prepared and disseminated via a web-based survey service to higher education students in their last year of economics faculty who aim to become entrepreneurs in Pakistan. All the items were measured by using a self-designating seven-point Likert scale ranging between 1 = "Strongly disagree" and 7 = "Strongly agree".

Finally, the poll asked about basic demographics such as gender, age, and faculty. The self-administered questionnaire.

3.2. The context of analysis

Exploring the potential drawbacks of digitalization is particularly relevant to assess the unbalances in the access to ICT and technologies, which are especially rooted in developing countries. However, digital inequalities do not depend only on the different accessibility of ICT but can be mainly influenced by the social, political, economic and cultural systems, that can not only prevent a democratic access to technologies but can also affect the capabilities to use them [76].

Among the different developing countries, digital divide is particularly acute in South Asia that, despite the economic and technological progress of the past decade, remains extremely divided along economic, geographic and gender [77]. Moreover, the gender gap in Internet and mobile access is noticeable in all South Asian countries (particularly in Bangladesh and India).

Specifically, Pakistan is one of the countries with the lowest degree of digitalization (access to technology and internet) and with a significant lack of educational and economic support to develop digital skills [78,79].

Despite the government's attempts to improve ICT infrastructure over the last fifteen years [80], a large proportion of Pakistanis are unable to access (first level of digital divide) or use (second level of digital divide) the Internet and ICT [81].

According to the results reported in the Inclusive Internet Index 2022 (based on the dimensions of availability, affordability, relevance and readiness), Pakistan ranks last out of 22 countries in Asia and 79 globally. What is more, an emerging digital divide across gender, income, religion, geographic location (urban-rural) and education lines can be noticed. Not only inclusivity but also digital literacy is low and a massive gender gap on internet and mobile access have been reported (20 % for women compared to over 75 % for men). Data from PSLM (Pakistan Social and Living Standards Measurement) 2021 reveals that only 12 % of households can access to a computer (19 % in urban areas and 7 % in rural areas) while internet access is only 33 % overall, at a considerable distance to universal access (64 %, as reported by Statista, 2023). The main motivation for not using computer (63 %) declared by the interviewees is that they "don't know how to use it" by showing that digital skills are low.

Regarding entrepreneurship, the involvement of women in the creation of new companies and the advancements of their careers in existing companies is still in its infancy stage. Out of 45 Asian countries, Pakistani economy is ranked 38th for women's participation in the employment market and is ranked 164th out of 176 countries worldwide [67].

Despite the significant degree of digital divide and gender digital divide in Pakistan, extant research that performs empirical research on this country seems to put little attention to the role of ICT usage and capabilities and to its effect at an individual level, such as students' literacy [68]. Moreover, the impact of gender and digital divide on the development of entrepreneurial orientation is an underrated topic of research [14,82]. Hence, identifying the determinants of digital divide and of technology usage is an urgent issue that requires further investigation.

3.3. Data collection and analysis

A convenience sample strategy was utilized, i.e., the researchers randomly contacted students using pen and paper surveys (during lessons, exams and conferences) and online questionnaires (through online communities such as LinkedIn, Facebook).

Data was collected from three researchers between February and May 2022. Over the 300 people to whom the questionnaire was submitted, after careful data cleaning, the complete questionnaires to be subjected to analysis amounted to 214, with a response rate of 70 %.

The data for this study has been analyzed using IBM SPSS Statistics 28 and IBM SPSS AMOS 24. First, Confirmative Factor Analysis (hereafter CFA) was used to evaluate the measurement model's reliability and validity. Second, an MGA using Partial Least Squares (PLS)-SEM was used to assess the moderating effect of gender on the relationship between digital skills, technology acceptance and use (as measured by UTAUT), and entrepreneurial orientation.

3.3.1. Reliability and validity analysis

After showing descriptive statistics (see Table 1), the measurement model's reliability and validity were evaluated. First, an exploratory factor analysis (EFA) was used to identify the constructs' latent variables and purify the measuring items. Four items were removed at this stage (DS5, DS6, EE4, and EO5, see Appendix A) because their factor loading fell below the recommended level of 0.5 (Hair et al., 2010). Exploratory factor analysis (EFA) identifies factors from empirical data without assuming a theoretical model of latent factors underpinning the variable [70]. Then, following the approach indicated by Ref. [83], a two-stage test was conducted.

In the first step, the measurement model was estimated using CFA. This approach begins with hypotheses about a theoretical model and strives to investigate the links between observable and latent variables, whereas SEM seeks to describe complicated causal structures in these interactions.

The purpose of factor analysis is to explain the variability between a collection of directly visible variables to generate some latent variables, or factors, which are constructs that are not observed but are produced from the combination of observed variables. The Average Variance Extracted (hereafter AVE) was utilized to assess convergent validity.

In the second step, the structural model was evaluated, and the possible links between all variables were identified. Finally, to assess discriminant validity, we compared the square root of the AVE to the correlations between the five components. Correlation coefficients. According to Fornell-Larcker criterion analysis, discriminant validity was supported [84].

Table 1
Demographics and description of the sample.

Description		N.	%
Sample		214	
Gender	Female		53 %
	Male		47 %
Age	18–20		52 %
	21–25		31 %
	26–30		17 %
Faculty	Social and communication sciences		35 %
	Science, Technology and Math		22 %
	Humanities and education science		18,5 %
	Engineering		14,5 %
	Political science		5,5 %
	Medicine and Pharmacy		5 %
	Arts, literature, philosophy		4,5 %
	Economics		1 %
	Law		1 %

Source: authors' elaboration

3.3.2. Structural equation modelling

Structural Equation Modelling (hereafter SEM) is commonly adopted in marketing and management in general [85] and to investigate technology acceptance and use [86].

This method enables researchers to statistically prove various relationships between variables measured using multiple items. Unlike multiple regression, SEM allows for the simultaneous estimation of many dependent and independent variables that would otherwise go undetected. SEM seeks to estimate and evaluate the fit of the theoretical model hypothesized with the real data gathered by combining confirmatory factor analysis and analysis of multivariate regression.

SEM is appropriate in social research, notably in behavioral and economic sciences [87] to investigate linear relationships between variables evaluated with numerous items. It is a technique that lends itself ideally to the analysis of complex and multidimensional entities, making it easier to operationalize psychological or intangible ideas that are not directly observable.

Furthermore, the PLS-SEM method appears to be an effective strategy for dealing with endogeneity, which is one of the primary limitations of regression analysis [88]. PLS-SEM, on the other hand, is based on regression analysis, for which several solutions to heterogeneity have been proposed. One method of lowering endogeneity [89] is to provide a control variable or a moderating effect to account for a portion of the variance in the dependent variable [90].

Structural equation models use a linear model to connect a multivariate vector (X_1, …, X_K) of observable variables to a vector of latent variables (F) of lower dimension [91,92]. The general form of these models is given by the structural equation:

$$y = \alpha + By + \Gamma x + \zeta \tag{1}$$

where y indicates the vector of endogenous variables, whereas x indicates the vector of exogenous variables and ζ is the vector of errors in the equations. The vector α contains the intercepts of the equations but can be omitted when analyzing the correlation or covariance matrix directly. B indicates the matrix of the links between the endogenous variables, whereas Γ indicates the matrix of links between exogenous and endogenous variables.

In addition to B and Γ, there are two other parameter matrices involved in these models: $\Psi = \mathrm{Cov}(\zeta)$, the covariance matrix between errors; $\Phi = \mathrm{Cov}(x)$, the covariance matrix between the observed variables.

3.3.3. Fit indices

One of the primary objectives of SEM is to determine the degree of connection between a given theoretical model and empirical data by evaluating its capacity to recreate real data in a trustworthy and accurate manner. To assess this dependability and accuracy, the SEM employs goodness-of-fit indicators, which, if validated, demonstrate that the SEM is well structured and appropriate for empirically describing what is stated in the theoretical model. The goodness of fit is the model's correspondence (adequacy) to the collected data (chi-square, CFI, TLI, RMSEA, etc.).

The chi-square ($\chi2$) test is a first indicator of the goodness of the analysis model to fit the data. In fact, the test can be defined as the difference between the observed measures' variance-covariance matrix and the measures estimated in the model [93]. The test evaluation considers degrees of freedom, calculated as the ratio between the square of the sum of the dependent and independent variables of the model and the number of estimated parameters ($\chi2$/degrees of freedom), as the estimated model may not account for all possible links between variables. Values of $\chi2$ with probability $p > 0.10$ are often considered as indicative of good fit, even if the chi-squared value is influenced by sample size.

Comparative Fit Index (CFI) [94] measures the difference between the model under examination (target model) and the null model (null model), i.e., the model in which the observed variables are uncorrelated. Formally:

$$1 - [\chi2(M) - dfM] / [\chi2(N) - dfN] \tag{2}$$

Therefore, its value varies between 0, when the observed variables have a correlation close to zero, and 1, when the value of $\chi2$ relative to the model is lower than its degrees of freedom (formally $\chi2M < glM$).

Tucker-Lewis Index (TLI) [95] is an incremental comparative index that evaluates the improvement of the target model compared to the null model. Its value can go out of the range 0–1, but extant research recommends that it exceed the threshold of 0.93. This index can be determined as follows:

$$1 - [\lambda M / dfM] / [\lambda N / dfN] \tag{3}$$

The root mean squared error of approximation (RMSEA) [96,97] is an absolute fit index that quantifies the difference between the model's $\chi2$ and the degrees of freedom (formally $\chi2M - glM$) by adjusting this difference also taking into account the sample size. When RMSEA is near to 0 indicates the best fit, whereas higher values indicated a worst fit by providing a measure of the approximation error of the data to the model supposed. The threshold commonly accepted in literature is between <0.05 and < 0.08 for reasonable approximation errors [98]. The formula of RMSEA is:

$$\sqrt{([(\chi2(M) - dfM)/(N-1)\, dfM])} \tag{4}$$

3.3.4. Multiple group analysis

Following the estimation of the measurement and structural models, a Multiple Group Analysis (hereafter MGA) was used to evaluate the model by stratifying it into two unique groups depending on the gender variable (about 100 male and 114 female). To compare structural coefficients between groups, the measurement model should be the same in all groups, and the items should be tested on the same scale [99].

Furthermore, to assess the model's measurement invariance, factor loadings should be identical across groups (males or females). After dividing the sample into two groups, the structural models with the standardized path coefficients are analyzed for each group to assess if the weight of the relationships between the constructs is the same as in the general model (by showing the irrelevance of moderating variable) or is different than in the general model (lower and higher weights can show that the moderator heightens or diminishes the relationship between the independent and dependent variables).

4. Empirical evidence

4.1. Sample characteristics

According to the research aims, the population in the sample consists of higher education students. Table 1 shows that the gender ratio of responders was 47 % male and 53 % female. The bulk of the individuals in the sample are between the ages of 18–20, with an average age of 21.35 % of respondents attend a course in social and communication science, whereas the 22 % attend a course in science, technology and math. The sample size is in line with [100]'s suggestion of at least 200 observations, which can be considered as the minimum recommended threshold for SEM [83], given an indicator to latent variables ratio of 3, the rule of thumb of 5/10 observations per estimated parameter, of 100 cases/observations per group and the ratio of 5 cases per variables [99–101].

4.2. Measurement and structural model

The first step in data analysis was to develop a measurement model to identify latent constructs using CFA, which allows us to assess the validity and reliability of the constructs (latent variables) as well as the properties of the items that measure them (observed variables). The

measuring model was then expanded to incorporate the structural links between the previously measured latent dimensions. The data was evaluated with a covariance matrix and the greatest likelihood method.

As shown in Table 2, all of the items in the model have high alpha coefficients (over the cut-off of 0.7), indicating good dependability and a high level of internal consistency for each construct [101].

The model's goodness of fit was tested using the Chi square statistic [102], the Comparative Fit Index (CFI), Tucker-Lewis Index (TLI), and root mean square error of approximation (RMSEA). Table 2 shows good fit indices, including $\chi 2/df = 2.378$, Chi square = 197.400, CFI = 0.97, TLI = 0.96, and RMSEA = 0.56, indicating that the suggested measurement model accurately fits the data.

The measurement model's convergent validity has been calculated using the AVE and composite reliability (CR). The AVE (from 0.746 to 0.879) and CR (from 0.901 to 0.955) values are all higher than the specified cut-off point, indicating that the measurement model has acceptable internal consistency. The discriminant validity was determined using the square root of the AVE (see Table 3). As predicted by Ref. [87], the square roots of the AVE for each factor exceed the association with other components. This finding shows that the factors underpinning the constructs share more variance with their items than with the other constructs in the model.

Then, the estimation of casual paths has been added to the measurement model to test the hypotheses included in the research model. Fig. 2 shows the structural model with two endogenous latent variables (Behavioral Intention and Entrepreneurial Orientation), five exogeneous latent variables (Digital Skills, Performance Expectancy, Effort Expectancy, Social Influence, Facilitating Conditions) and 27 observed variables.

Table 3
Correlation among latent constructs.

	DS	PE	EE	SI	FC	BI	EO
DS	**0.909**						
PE	0.828	**0.953**					
EE	0.901	0.836	**0.847**				
SI	0.872	0.788	0.736	**0.953**			
FC	0.768	0.603	0.644	0.857	**0.961**		
BI	0.777	0.543	0.467	0.736	0.768	**0.878**	
EO	0.469	0.403	0.456	0.425	0.537	0.657	**0.847**

*Bold values in the diagonal are square roots of the AVE.

As shown in Table 4, all of the structural regression coefficients are significant (p-value <0.05), with the exception of the coefficient measuring the influence of social influence (SI) on the intention to use technology (BI) in entrepreneurial activities.

The presence of digital skills (DS), performance expectancy (PE), effort expectancy (EE), and enabling conditions (FC) all predict the intention to employ technology in business. Performance expectancy is the strongest predictor of students' propensity to employ technology in entrepreneurship ($\gamma = 0.678$), whereas enabling conditions (FC) have a lower positive influence ($\gamma = 0.291$). Social impact does not affect the intention to adopt technology ($\gamma = 0.17$). Developing a positive attitude towards technology can increase student entrepreneurs' intention to use and adopt it in their companies ($\beta = 0.897$).

The structural model shows a good fit with $\chi 2$ equal to 324.521, RMSEA equal to 0.070, CFI equal to 0.945 and TLI equal to 0.967 (see

Table 2
Standardized path coefficients and fit indices for the measurement model.

Construct	ITEMS	LABEL	Factor loading	Cronbach α	CR	AVE
DIGITAL SKILLS (DS)	I know how to bookmark a website I like so I can view it later	DS1	0.876	0.946	0.907	0.857
	I know how to download information I found online	DS2	0.789			
	I know when I can post pictures and videos of other people online	DS3	0.765			
	I know how to compare different sources to decide if information is true	DS4	0.754			
	I know how to identify the author of the information to evaluate its reliability	DS5	0.743			
PERFORMANCE EXPECTANCY (PE)	Using technology would improve my work performance	PE1	0.893	0.908	0.947	0.746
	Using technology would be helpful in my work	PE2	0.864			
	Using technology would enhance the effectiveness of business activities in my company	PE3	0.856			
	Using technology would increase my productivity at work	PE4	0.789			
EFFORT EXPECTANCY (EE)	Interaction with a new technology would be clear and understandable	EE1	0.913	0.937	0.917	0.821
	It would be easy for me to become skilful at using a new technology	EE2	0.911			
	I would find a new technology not easy to use	EE3	0.928			
SOCIAL INFLUENCE (SI)	People who influence my behavior think that I should use new technologies in my work	SI1	0.884	0.861	0.901	0.871
	People who are important to me would think that I should use new technologies in my work	SI2	0.873			
	People around me will take a positive view of me using new technologies in my work	SI3	0.778			
	People around me would think that I should not use new technologies	SI4	0.765			
FACILITATING CONDITIONS (FC)	I have the resources necessary to use a new technology	FC1	0.923	0.903	0.923	0.879
	I have the knowledge necessary to use a new technology	FC2	0.917			
	I feel comfortable using new technologies in my daily life	FC3	0.911			
	I have no problems to use new technologies when I study/work/ communicate with my friends	FC4	0.897			
BEHAVIORAL INTENTION (BI)	I intend to use a new technology in my work	BI1	0.972	0.917	0.955	0.857
	I will probably use a new technology in my work	BI2	0.953			
	I have decided to use a new technology in my work	BI3	0.922			
ENTREPRENEURIAL ORIENTATION (EO)	I like to take bold action by venturing into the unknown	EO1	0.910	0.917	0.906	0.751
	I am willing to invest a lot of time and/or money on something that might yield a high return	EO2	0.896			
	I tend to act "boldly" in situations where risk is involved	EO3	0.859			
	I often like to try new and unusual activities that are not typical but not necessarily risky	EO4	0.843			
X^2	**P**	**Df**	**X2/df**	**CFI**	**TLI**	**RMSEA**
197.400	<0.001	83	2.378	0.973	0.967	0,56

Source: authors' elaboration

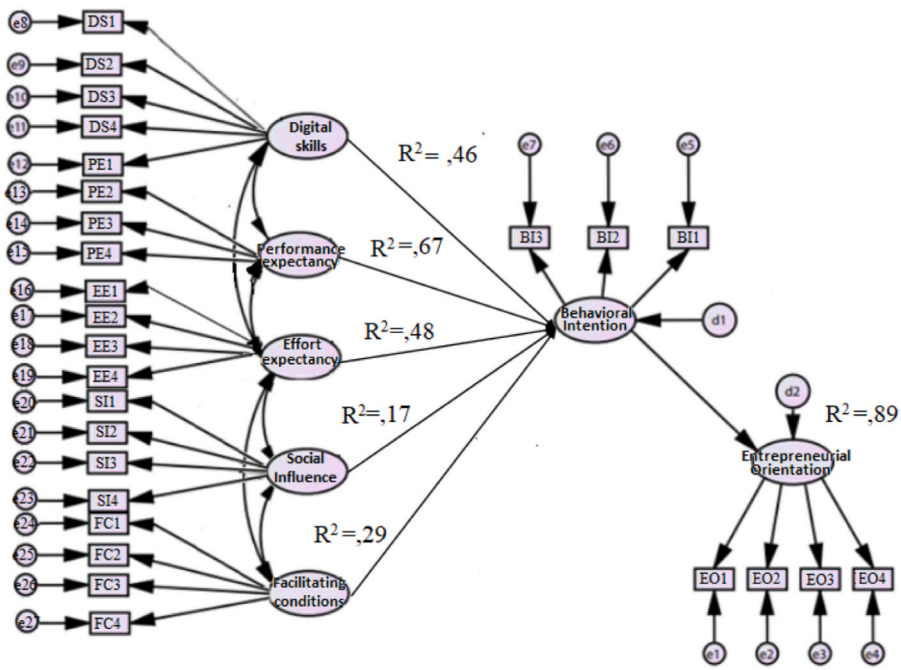

Fig. 2. Structural model (standardized coefficient). Source: authors' elaboration.

Table 4
Standardized path coefficients and t-value for structural model for hypotheses testing.

Path Hypotheses	Standardized β Weights	SE	T-value	*P*-value	Hypothesis supported
H1 DS →BI	0.465	0.058	10.467	***	Yes
H2 PE →BI	0.678	0.063	4.835	***	Yes
H3 EE →BI	0.489	0.042	10.325	***	Yes
H4 SI → BI	0.172	0.056	−1.863	0.68	No
H5 FC →BI	0.291	0.037	18.077	**	Yes
H6 BI →EO	0.897	0.068	8.976	**	Yes

***$p < 0.01$; **$p < 0.05$.

Table 5
Model fit indices for the structural model.

X^2	P	df	X2/df	CFI	TLI	RMSEA
324.521	<0.001	83	3.909	0.945	0.967	0,070

Source: authors' elaboration

Table 5). Even if the RMSEA is higher than the threshold accepted in literature of 0.05, the test of close fit ($p > 0.05$) indicates that the difference from the threshold is not an issue. Additionally, this value is between 0.07 and 0.08, which, in the extant research [103], is considered an acceptable level of fit.

4.3. Multiple group analysis: the role of gender

Following the examination of the MGA, the model was divided into two groups based on interviewee gender (male/female). To compare structural coefficients between two groups, both groups should use the same measurement model and measure the items on the same scale [104]. To test the model's measurement invariance, the factor loadings must be equal across the two groups. Fig. 3 displays the multiple-group structural model with standardized path coefficients.

In the structural model of male group ($R^2 = 0.58$), all the coefficients are significant ($p < 0.05$) and all the hypotheses are supported (see Fig. 3 and Table 6), except for the validation of a statistical relationship between social influence and the intention to use technology ($\gamma = -0.28$), which shows a weak negative effect between the variables, whereas in the general model an almost total independency is demonstrated. Digital abilities are the most effective predictor of intention to employ technology in entrepreneurial activities ($\gamma = 0.69$). However, the influence of performance and effort expectancy is lower than in the general model, whereas the influence of enabling factors is greater. The intention to use technology has a smaller effect on entrepreneurial orientation compared to the overall model ($\beta = 0.78$).

The coefficients in the female group ($R^2 = 0.92$) are all significant, with the exception of the association between enabling conditions (FC) and the intention to employ technology in entrepreneurial activity.

The best predictor of the intention to use technology is effort expectancy ($\gamma = 0.86$). The association between social influence ($\gamma = 0.57$) and intention to use technology is stronger than in the general model and male group. However, the relationship between digital abilities and performance anticipation is slightly weaker than in the overall model. Finally, the intention to employ technology has a stronger impact on the growth of entrepreneurial intention than the general model ($\beta = 0.98$) and in the male group.

5. Discussion

The findings show that digital skills (H1 confirmed) and perceptions of technology capabilities can have a substantial impact on the willingness to use ICT in entrepreneurial activities (H2, H3, H4 confirmed). Furthermore, the impact of technology adoption intent on the development of entrepreneurial orientation (H6) is confirmed. The results are consistent with previous research, which suggests that developing digital skills and self-confidence in technology use can considerably boost new technology adoption intentions.

Despite the potential influence of reference group beliefs (friends, partners, family, colleagues, etc.) on the willingness to accept and use new technologies [32], the general model analysis has not confirmed the relationship between social influence and the intention to adopt technology in business activities. This result highlights the importance of functional and structural dimensions such as the possession of digital skills and the perception of ability to use technology in the successful adoption of technology, which should be accompanied by the

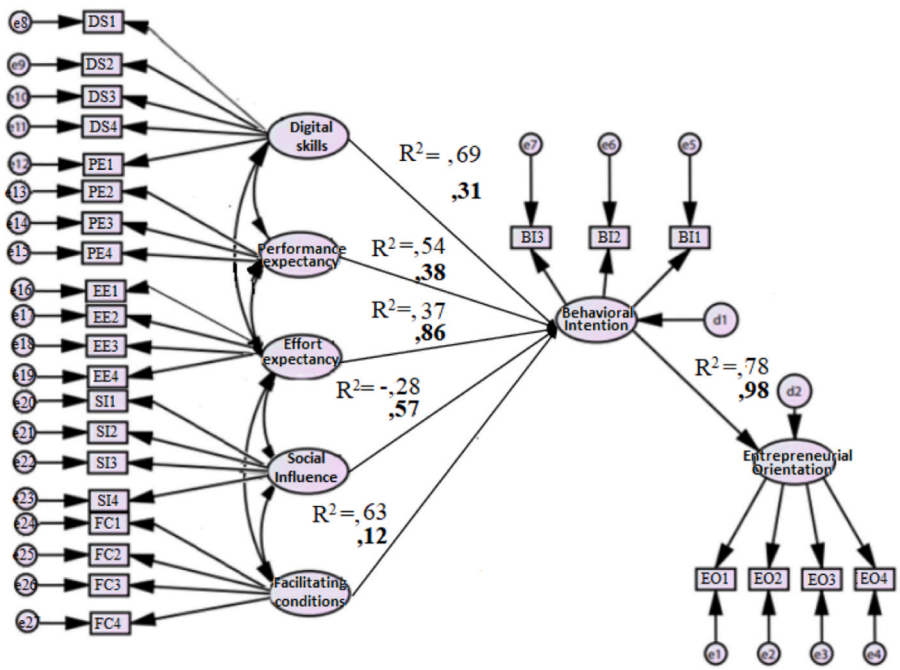

Fig. 3. Multi group structural model (standardized coefficient*). *Male model; **Female model.** Source: authors' elaboration.

Table 6
Multiple group model (standardized coefficient) in the two groups (male and female).

Path hypotheses	Standardized β Weights		SE		T-value		*P*-value		Hypothesis supported	
	Male	Female	Male	Female	Male	Female	Male	Female	Male	Female
H1 DS →BI	0.697	0.312	0.032	0.026	11.410	3.275	***	***	Yes	Yes
H2 PE →BI	0.546	0.387	0.095	0.094	2987	4.367	***	***	Yes	Yes
H3 EE →BI	0.378	0.862	0.068	0.034	−2355	0.765	**	**	Yes	Yes
H4 SI → BI	−0,283	0.573	0.087	0.067	−2769	22.365	0.09	***	No	Yes
H5 FC →BI	0.639	0.123	0.095	0.045	7.941	16.581	***	0.018	Yes	No
H6 BI →EO	0,785	0.981	0.056	0.073	10.879	18.254	**	**	Yes	Yes

***$p < 0.01$; **$p < 0.05$.

development of new knowledge and digital literacy.

Finally, the general model's findings show that a positive attitude toward technology adoption can encourage entrepreneurial orientation (H6 confirmed) by confirming that a proactive attitude and the reduction of resistance to new technology can enhance entrepreneurial attitude and, as a result, firm competitiveness and the ability to create innovation.

When the gender variable is introduced and the model is divided into two groups, the pattern of association appears to be slightly different. Even though the role of digital skills in the willingness the function of digital skills in the desire to use technology is validated in both groups (male and female), the male group carries a greater weight in this relationship. At the same time, while the availability of favorable conditions (confidence in the use of technology and possession of the necessary resources) can increase the intention to use technology in males in the sample, this variable is irrelevant in females.

According to the regression coefficients, the social influence (SI) is the best predictor of the intention to use technology of the female in the sample, who are influenced by social pressures more than male. The best predictor for the intention to use technology for the men in the sample is digital skills: this result confirms that women are primarily influenced by social characteristics, whereas men pay more attention to technical competencies. It can be assumed that in Pakistani context the decisions to utilize technology and the perceptions of technology usefulness are related to (hard) skills dimensions for men and social (soft) dimensions for women. This evidence can be explained by men's inclination to focus on structural features and be more conversant with scientific fields, as well as the presence of a psychological component and a special societal pressure on women who want to use technology in their entrepreneurial activities [30].

Furthermore, the statistical association between the intention to embrace technology and entrepreneurial attitude is stronger in female groups than in male groups, indicating the importance of technology use and access in female entrepreneurship.

6. Theoretical and managerial implications

The study contains some theoretical and managerial implications by identifying the most relevant characteristics that can boost the adoption of technology in a sample of students and by investigating the disparities in individuals' attitudes based on their gender.

From a theoretical standpoint, identifying the key enabling factors of willingness to accept and implement technology may represent an attempt to fill a gap in existing research due to a scarcity of studies that analyze the barriers to technology acceptance and use in business processes and entrepreneurship. Furthermore, by shedding light on the importance of soft dimensions (psychological and social characteristics) in improving willingness to adopt technology, the study takes the first step toward conceptualizing the various capabilities required to fully exploit the opportunities offered by new technologies [30].

The findings show that the potential differences in the attitude toward technology acceptance in Pakistani context can not only depend on the gender but can also be influenced by psychological and social pressures of society, that can discourage women from the launch of start-ups and new business activities, and from the culture of a given country which can prevent the fulfillment of equal opportunities for men and women.

According to the study, which reveals that social influence is stronger for the female sample and that the perception of digital skills is lower, it can be hypothesized that the barriers to women's technology adoption are not due to a lack of digital skills or confidence in using technology, but rather to a lack of societal support for women who are not encouraged to use technology and pursue innovation in their entrepreneurial activities.

The results confirm the existence of *multitasking whirlpool* [105], the social phenomenon that attributes to women the need to perform heterogeneous activities, from family to domestic duties to sporadic and indefinite jobs in which they are faceless and voiceless [106]. Indeed, the MGA also shows that in our sample social influence has a higher weight in influencing woman's intention to use technology: this implies that social pressure on women can hypothetically exert an impact on their life and career choices. This can further exacerbate the lack of need for women not to acquire specialized training in the digital field. Starting from this study, future research on women entrepreneurship and gender gap can further explore the given kinds of digital skills (strictly technological, critical, informational, etc.) that can be boosted to empower women's attitude to digital entrepreneurship.

Extant research tends to focus separately on gender gap, digital divide or women entrepreneurs [14]. Hence a study that intersects these three areas can help assess the solutions to reduce inequalities in gender, access to technology and job opportunities.

The findings of the study can help identify the psychological, technical, knowledge-based and social factors that can drive or prevent women from becoming entrepreneurs in a developing country: in this way, the actions and strategies to boost advances in digital skills can be identified. Maybe different levels of digital literacy can be identified [107] to map the areas that require interventions. Moreover, sensibilization activities can be targeted at other stakeholders that can exert social influence on women, such as family, teachers, public authorities, media, institutions [68].

By revealing differences in the attitude toward technology and EO between female and male Pakistani Higher education students, the results indicate that Pakistani women tendentially are less focused on digital skills as an essential lever for the use of technology; however, they perceive the acceptance of technology essential to become entrepreneurs.

In the sample of this research, there is a stricter relationship between technology use and the possibility to become entrepreneurs in women than in men. Hence, tendentially Pakistani young women search for more competencies and hard skills (e.g., in the field of STEM educations) to undertake the entrepreneurial profession in general and ICT-related sectors.

Basically, the findings reveal the need for new strategies and policies for research, training and education in private and public sector and at the national, provincial and sectoral levels. To nurture digital inclusion and cross-sectorial digitalization, women's access to ICTs, technological and digital hard and soft skills should be increased through the joint actions of government, companies, research centres, education institutions and universities to bridge the double gender and digital gap (GDD) in terms of equal opportunities and access, by reducing the gap also between elderly and youngsters. By starting from the different weights of the enabling factors for the acceptance and use of technology estimated in the study (i.e., the fact that facilitating conditions have a lower influence on behavioral intention) not only digital skills, but also digital education and attitude can be promoted at a collective level (i.e., to address the low impact of social influence on behavioral intention shown in the sample).

Despite pre-eminent, the lack of knowledge is not the only issue to be resolved to challenge the digital and gender gap: the findings show that the not only the possession of knowledge but the access to technological resources can influence the willingness to use technologies in work activities. Hence, digitalization of skills is not the only issue to be addressed, since affordability and availability of technology, especially in developing counties and rural areas, can be managed and promoted by the cooperation of government, private sector, academia and civil society to create a unified inclusive digitalization agenda for different stakeholders at cross-sectoral levels.

Thus, the findings highlight the importance of integrating technical, structural, social, and psychological factors in order to encourage the use of technology and the enrichment of digital knowledge in order to improve business competitiveness and creativity.

According to a managerial perspective, investigating the enablers of effective technology adoption in entrepreneurial orientation can assist managers in understanding the key drivers for the establishment of a proactive attitude toward technology that should support new ideas while avoiding the development of resistance to changes. The validation of the role of strategic integration of technological, social, and psychological dimensions can assist managers in understanding how to embed strategy, culture, process management, and operations with a new mindset based on the continuous use of technology and data analytics to collect insights for the development of innovation.

The importance of social and psychological support for proper use of technology in business processes (particularly for females) and knowledge, skills, and dynamic capabilities (particularly for males) can help to identify the drivers for the creation and exploitation of innovation opportunities, the enhancement of quality of life, and the reduction of the digital divide in developing countries.

What is more, examining the factors that can encourage or discourage entrepreneurship as a propensity in students' attitude (entrepreneurial orientation) can help managers in general, education managers and policy-makers understand how to predict the future work choices of youngsters and, consequently, the skills on which they can leverage in the education offering to orient future behavior, by potentially modifying it, forecasting the effects and enhancing their readiness for the labour and employment market.

7. Conclusion, limitations and future research

According to the empirical findings, there is a positive association between digital skills, performance expectancy, effort expectancy, supportive conditions, technology adoption intention, and the growth of entrepreneurial orientation. As a result, it is clear that, in order to encourage student entrepreneurship, not only digital skills are required, but also psychological (perceptions, self-confidence), social support (from reference groups), and cultural dimensions (the removal of resistance to change and the adoption of a positive attitude toward technology).

The study reveals the mechanisms and drivers of proper technology application in developing nations based on gender variable by putting light on the varied attitudes toward technology of female and male in the sample. The study proposes a research agenda that outlines the important opportunities, challenges and issues that can promote or hinder the use of technology as a means of closing the gender gap.

In an era of pandemics, managers can benefit from identifying factors that can exacerbate gender disparities and support entrepreneurship in the development of new strategies for the proper adoption of a new mind-set that embraces the acceptance of new technologies. Furthermore, the talents that should be developed in modern enterprises to promote digitization of business operations and entrepreneurship have been identified.

The findings reveal: (i) the high impact of digital skills on the willingness to use technology in entrepreneurial activities (H1 confirmed);

(ii) the influence of the classic UTAUT variables, with the exception of social influence, on technology adoption intention (H2-H4 confirmed); and (iii) the positive relationship between the intention to adopt technology and entrepreneurial orientation (H6). As a result, the empirical study reveals a positive relationship between digital skills, a proclivity to use technology, and entrepreneurial behavior.

The findings are consistent with earlier research, which shows that crucial aspects of technology progress, such as the digital divide, might have an impact on entrepreneurship.

Furthermore, the study aims to fill a gap in the literature by investigating the role of gender on the relationship between digital skills, technology adoption intention, and entrepreneurship in developing nations. MGA confirms the role of gender as a moderating variable in the model by revealing differences between the fit indexes and regression coefficients of the global structural model and the fit indexes and regression coefficients of the structural model of male and female groups.

While it is acknowledged that technology can give numerous benefits to entrepreneurship, the disadvantages of technical advancement and the digital gap can extend exclusion in developing nations and cause psychological and social restraints for women. Because existing studies tend to focus on the digital divide in developing countries, future study might assess the impact of the digital divide and the gender gap on entrepreneurship in developing and developed countries.

The research methodology used in this study takes into account not only the technological dimension (digital skills) but also the psychological (performance-effort expectancy, enabling settings) and social dimensions (social influence). Other factors, such as culture, politics, education, and managerial practices [108,109], can stymie the development of equal chances for men and women in developing countries. To address the study's shortcomings, additional research can address the issue by examining the impact of cultural and societal characteristics, as well as education, on the attitude to employ technology by assessing the effect of the gender gap in developing and developed nations.

For example, the moderating effect of collective aspects (rather than individual variables such as gender) might be studied by starting with the relationship between technological access, information access, and engagement in social and political life. The research model can be expanded to include additional moderating variables in the relationship between digital skills and the intention to adopt technologies, such as political orientation [110], political instability [111], institutional quality, and democracy [112]. Furthermore, the impact of the financial system on the digital divide can be evaluated. It has been demonstrated that ICT, when used democratically, can help to economic growth and eliminate disparities [113].

Future research can investigate the impact of financing systems tailored for developing nations, such as microcredit, on the enrichment of entrepreneurial orientation and the intention to employ technology [114,115].

The use of convenience sampling, which does not ensure exact resemblance of the people in the sample to the real population, is a major weakness of the study. Further research can use stratified sampling to replicate the geographical distribution of developing/developed countries and to include interviews from all of the developed and developing nations categorized by the UN. The model proposed for this study can be enhanced and extended to include characteristics such as data-driven orientation, which can boost technology adoption intention and innovation creation.

Moreover, future studies can start from the critical factors that can influence student's willingness to employ technology in work activities and in entrepreneurial-related job (e.g., digital skills and facilitating conditions, hard dimensions, for men and social influence, a more soft dimension, for women) by extending the research model with a construct that envelops technological, social and cultural dimensions involved in technology adoption (such as for instance the cognitive variable of MLSE, that comprises intrinsic motivation, m-learning self-efficacy [116]) to further inspect the digital and gender gap through a cross-cultural comparison.

CRediT authorship contribution statement

Cristian Barra: Writing – review & editing, Writing – original draft, Supervision, Methodology, Conceptualization. **Mara Grimaldi:** Writing – review & editing, Writing – original draft, Validation, Supervision, Methodology, Data curation. **Amina Muazzam:** Writing – original draft, Validation, Methodology, Data curation. **Orlando Troisi:** Writing – review & editing, Writing – original draft, Validation, Supervision, Methodology, Formal analysis, Data curation, Conceptualization. **Anna Visvizi:** Writing – review & editing, Writing – original draft, Supervision, Methodology, Formal analysis, Conceptualization.

Data availability

The authors do not have permission to share data.

Appendix A. Constructs' measurement items and related references

Construct	References	Labels	Items
DIGITAL SKILLS (DS)	[7]	DS1	I know how to bookmark a website I like so I can view it later
	[71]	DS2	I know how to download information I found online.
	[72]	DS3	I know when I can post pictures and videos of other people online
		DS4	I know how to compare different sources to decide if information is true
		DS5	I know how to identify the author of the information to evaluate its reliability
		DS6	I find hard to decide what the best keywords are for online searching
UNIFIED THEORY OF ACCEPTANCE AND USE OF TECHNOLOGY (UTAUT)	[35]		
PERFORMANCE EXPECTANCY (PE)		PE1	Using technology would improve my work performance
		PE2	Using technology would be helpful in my work tasks
		PE3	Using technology would enhance the effectiveness of business activities in my company
		PE4	Using technology would increase my productivity at work
EFFORT EXPECTANCY (EE)		EE1	Interaction with a new technology would be clear and understandable
		EE2	It would be easy for me to become skilful at using a new technology
		EE3	I would find a new technology not easy to use
		EE4	Learning to operate a new technology would be easy for me
SOCIAL INFLUENCE		SI1	People who influence my behavior think that I should use new technologies in my work
		SI2	People who are important to me would think that I should use new technologies in my work
		SI3	People around me will take a positive view of me using new technologies in my work

(*continued on next page*)

(*continued*)

Construct	References	Labels	Items
		SI4	People around me would think that I should not use new technologies
FACILITATING CONDITIONS (FC)		FC1	I have the resources necessary to use a new technology
		FC2	I have the knowledge necessary to use a new technology
		FC3	I feel comfortable using new technologies in my daily life
		FC4	I have no problems to use new technologies when I study/work/communicate with my friends
BEHAVIORAL INTENTION (BI)		BI1	I Intend to use a new technology in my work
		BI2	I will probably use a new technology in my work
		BI3	I have decided to use a new technology in my work
ENTREPRENEURIAL ORIENTATION (EO)	[73] [74] [75]	EO1	I like to take bold action by venturing into the unknown
		EO2	I am willing to invest a lot of time and/or money on something that might yield a high return
		EO3	I often like to try new and unusual activities that are not typical but not necessarily risky
		EO4	I prefer to try my own unique way when learning new things rather than doing it like everyone else does
		EO5	I usually act in anticipation of future problems, needs or changes
		EO6	I tend to plan ahead on projects

Source: authors' elaboration

References

[1] Reddy RC, Bhattacharjee B, Mishra D, Mandal A. A systematic literature review to-wards a conceptual framework for enablers and barriers of an enterprise data science strategy. Inf Syst E Bus Manag 2022;20(1–33):223–55. https://doi.org/10.1007/s10257-022-00550-x.

[2] Matt DT, Pedrini G, Bonfant A, Orzes G. Industrial digitalization. A systematic literature review and research agenda. Eur Manag J 2022;41(1):47–78. https://doi.org/10.1016/j.emj.2022.01.001.

[3] Fang ML, Canham SL, Battersby L, Sixsmith J, Wada M, Sixsmith A. Exploring privilege in the digital divide: implications for theory, policy, and practice. Gerontol 2019;59:e1–15. https://doi.org/10.1093/geront/gny037.

[4] Lai J, Widmar NO. Revisiting the digital divide in the COVID-19 era. Appl Econ Perspect Pol 2021;43:458–64. https://doi.org/10.1002/aepp.13104.

[5] Millán JM, Lyalkov S, Burke A, Millán A, van Stel A. 'Digital divide' among European entrepreneurs: which types benefit most from ICT implementation? J Bus Res 2021;125:533–47. https://doi.org/10.1016/j.jbusres.2019.10.034.

[6] Mottin-Sylla MH. The gender digital divide in francophone Africa: a harsh reality. ENDA Third World. Dakar; 2005.

[7] Area M, Guarro A. La alfabetización informacional y digital: fundamentos pedagógicos para la enseñanza y el aprendizaje competente. Rev Española Doc Científica 2012:46–7. https://doi.org/10.3989/redc.2012.mono.977. Spanish.

[8] Alderete MV. Examining the ICT access effect on socioeconomic development: the moderating role of ICT use and skills. Inf Technol Dev 2017;23(1):42–58. https://doi.org/10.1080/026811102.2016.1238807.

[9] Visvizi A, Troisi O, Grimaldi M, Loia F. Think human, act digital: activating data-driven orientation in innovative start-ups. Eur J Innovat Manag 2022;25(6): 452–78. https://doi.org/10.1108/EJIM-04-2021-0206.

[10] Jamil S. Journalism for sustainable development: the imperative of journalists' rights to freedom of expression and access to information for promoting sustainable development in Pakistan. J Appl Journal Media Stud 2020;9(3): 271–91. https://doi.org/10.1386/ajms_00016_1.

[11] Yoon H, Jang Y, Vaughan PW, Garcia M. Older adults' internet use for health information: digital divide by race. Ethnicity and socioeconomic status. J Appl Gerontol 2020;39(1):105–10. https://doi.org/10.1177/0733464818770772.

[12] Solomon EM, van Klyton A. The impact of digital technology usage on economic growth in Africa. Util Pol 2020;67:101104. https://doi.org/10.1016/j.jup.2020.101104.

[13] Szeles MR. New insights from a multilevel approach to the regional digital divide in the European Union. Telecommun Pol 2018;42(6):452–63. https://doi.org/10.1016/j.telpol.2018.03.007.

[14] Visvizi A, Lytras M, Chuman M, Sarirete A, Kozłowski K. Guest editorial: gender, entrepreneurship and the digital divide: a global perspective. Int. J. Gender and Entrepreneur. 2023;15(3):229–31.

[15] Abu-Shanab E, Al-Jamal N. Exploring the gender digital divide in Jordan. Gend Technol Dev 2015;19(1):91–113.

[16] Sinha S. Gender Digital Divide in India: Impacting Women's Participation in the Labour Market. In: Reflecting on India's Development. Singapore: Springer; 2018. p. 293–310. https://doi.org/10.1007/978-981-13-1414-8_14.

[17] Ashraf N. Spousal control and intra-household decision making: an experimental study in the Philippines. Am Econ Rev 2009;99(4):1245–77.

[18] Jamil S. Mobile phone usage and its socio-economic impacts in Pakistan. In: Xu X, editor. Impacts of mobile use and experience on contemporary society. Hershey, PA: IGI Global; 2019. p. 112–27.

[19] Nasir F, Ashraf M, Riaz M. The role of gender in employee retention: a study of private hospitals in Karachi. Int. J. Exp. Learn. & Case Stud. 2019;4(1):157–71.

[20] Hill C, Lawton W. Universities, the digital divide and global inequality. J High Educ Pol Manag 2018;40(6):598–610. https://doi.org/10.1080/1360080X.2018.1531211.

[21] Ragnedda M, Gladkova A. Understanding digital inequalities in the global South. In: Regnedda M, Gladkova A, editors. Digital inequalities in the global South. Global transformation in media and communication research - a palgrave and iamcr series. Cham: Palgrave Macmillan; 2020. https://doi.org/10.1007/978-3-030-32706-2.

[22] Van Dijk, T. A. (2016). Estudios críticos del discurso: un enfoque sociocognitivo. 2016;10(1):137-162..

[23] Kularski C, Moller S. The digital divide as a continuation of traditional systems of inequality. Sociology 2012;5151:1–23.

[24] UN. United nations E-government survey, UN (2022) human development index etc. https://publicadministration.un.org/en/Research/UN-e-Government-Surveys; 2020.

[25] Scheerder A, Van Deursen A, Van Dijk J. Determinants of Internet skills, uses and outcomes. A systematic review of the second-and third-level digital divide. Telemat Inf 2017;34(8):1607–24.

[26] Visvizi A, Lytras MD, Damiani E, Mathkour H. Policy making for smart cities: innovation and social inclusive economic growth for sustainability. J. Sci. Technol. Pol. Manag. 2018;9(2):126–33. https://doi.org/10.1108/JSTPM-07-2018-079.

[27] Adam IO, Alhassan MD. Bridging the global digital divide through digital inclusion: the role of ICT access and ICT use. Transforming Gov People, Process Policy 2021;15(4):580–96. https://doi.org/10.1108/TG-06-2020-0114.

[28] Levano-Francia L, Sanchez Diaz S, Guillén-Aparicio P, Tello-Cabello S, Herrera-Paico N, Collantes-Inga Z. Digital competences and education. J. Educ. Psychol.-Propositos y Representaciones 2019;7(2):579–88. 2019.

[29] Ibrahim N, Mas'ud A. Moderating role of entrepreneurial orientation on the relationship between entrepreneurial skills, environmental factors and entrepreneurial intention: a PLS approach. Manag. Sci. Lett. 2016;6(3):225–36. https://doi.org/10.5267/j.msl.2016.1.005.

[30] Chatterjee S, Gupta SD, Upadhyay P. Technology adoption and entrepreneurial orientation for rural women: evidence from India. Technol Forecast Soc Change 2020;160:120236. https://doi.org/10.1016/j.techfore.2020.120236.

[31] Elia G, Margherita A, Passiante G. Digital entrepreneurship ecosystem: how digital technologies and collective intelligence reshaping the entrepreneurial process. Technol Forecast Soc Change 2020;150:1–12. https://doi.org/10.1016/j.techfore.2019.119791.

[32] Bharadwaj AS. A resource-based perspective on information technology capability and firm performance: an empirical investigation. MIS Q 2000;24(1): 169–96. https://doi.org/10.2307/3250983.

[33] Yunis M, Tarhini A. Kassar, A the role of ICT and innovation in enhancing organizational performance: the catalysing effect of corporate entrepreneurship. J Bus Res 2018;88:344–56. https://doi.org/10.1016/j.jbusres.2017.12.030.

[34] Sharma Y. Women entrepreneur in India. IOSR J Bus Manag 2013;15(3):9–14. 2013.

[35] Venkatesh V, Morris M, Davis G, Davis FD. User acceptance of information technology: toward a unified view. MIS Q 2003;27(3):425–78. https://doi.org/10.2307/30036540.

[36] Gupta M, George JF. Toward the development of a big data analytics capability. Inf Manag 2016;53(8):1049–64. https://doi.org/10.1016/j.im.2016.07.004.

[37] Venkatesh V, Thong JY, Xu X. Unified theory of acceptance and use of technology: A synthesis and the road ahead. J. Assoc Inf Syst 2016;17(5):328–76.

[38] Brown SA, Venkatesh V. Model of adoption of technology in households: a baseline model test and extension incorporating household life cycle. MIS Q 2005: 399–426.

[39] Hazarika B, Bezbaruah MP, Goswami. Adoption of modern weaving technology in the handloom micro-enterprises in Assam: a Double Hurdle approach. Technol Forecast Soc Change 2016;102:344–56. https://doi.org/10.1016/j.techfore.2015.08.009.

[40] Weiner MD, Puniello OT, Noland RB, Ciemnecki D, Turakhia C. Consider the non-adopter: developing a prediction model for the adoption of household-level broadband access. Soc Econ Plann Sci 2012;46(3):183–93.

[41] Zhu Q, Lyu Z, Long Y, Wachenheim CJ. Adoption of mobile banking in rural China: impact of information dissemination channel. Soc Econ Plann Sci 2002;83: 101011.
[42] Kaye SA, Lewis I, Forward S, Delhomme P. A priori acceptance of highly automated cars in Australia, France, and Sweden: a theoretically-informed investigation guided by the TPB and UTAUT. Accid Anal Prev 2020;137:105441.
[43] Gupta A, Dogra N, George B. What determines tourist adoption of smartphone apps? An analysis based on the UTAUT-2 framework. J. Hospitality and Tour. Technol. 2018;9(1):50–64.
[44] Thomas T, Singh L, Gaffar K. The utility of the UTAUT model in explaining mobile learning adoption in higher education in Guyana. Int. J. Educ. Dev. Using ICT 2013;9(3).
[45] Yu CS. Factors affecting individuals to adopt mobile banking: empirical evidence from the UTAUT model. J Electron Commer Res 2012;13(2):104.
[46] Lin HC, Ho CF, Yang H. Understanding adoption of artificial intelligence-enabled language e-learning system: an empirical study of UTAUT model. Int J Mobile Learn Organisat 2022;16(1):74–94.
[47] Gupta VK, Niranjan S, Goktan BA, Eriskon J. Individual entrepreneurial orientation role in shaping reactions to new technologies. Int Entrepreneurship Manag J 2016;12:935–61.
[48] Song Z, Wang C, Bergmann L. China's prefectural digital divide: spatial analysis and multivariate determinants of ICT diffusion. Int J Inf Manag 2020 Jun 1;52: 102072.
[49] Anwar M, Clauss T, Meyer N. Entrepreneurship in family firms: an updated bibliometric overview. Rev. Manag. Sci. 2023:1–37.
[50] Díaz-García MC, Jiménez-Moreno J. Entrepreneurial intention: the role of gender. Int Enterpren Manag J 2010:261–83.
[51] Arshad M, Farooq O, Sultana N, Farooq M. Determinants of individuals' entrepreneurial intentions: a gender-comparative study. Career Dev Int 2016;21 (4):318–39.
[52] McGowan P, Redeker CL, Cooper SY, Greenan K. Female entrepreneurship and the management of business and domestic roles: Motivations, expectations and realities. Entrepreneurship Reg Dev 2012;24(1–2):53–72.
[53] Murtaza KG, Hui L. Higher education in Pakistan: challenges, opportunities, suggestions. Educ Q Rev 2021;4(2). Apr 25.
[54] Zhou X, Song M, Cui L. Driving force for China's economic development under Industry 4.0 and circular economy: technological innovation or structural change? J Clean Prod 2020 Oct 20;271:122680.
[55] De Vita L, Mari M, Poggesi S. Women entrepreneurs in and from developing countries: Evidences from the literature. Eur Manage J 2014;32(3):451–60.
[56] Vivarelli M, Baumol WJ. The microtheory of innovative entrepreneurship. J Econ 2011;103(2):199. https://doi.org/10.1007/s00712-011-0195-y.
[57] Katoch P, Bukhari SS, Gupta S. Analyzing the influence of digitalization in women entrepreneurship using entrepreneurial orientation. Acad Market Stud J 2023;27 (S3).
[58] Chiu YB, Lin CP, Tang LL. Gender differs: assessing a model of online purchase intentions in e-tail service. Int J Serv Ind Manag 2005;16(5):416–35.
[59] Venkatesh V, Speier C, Morris M. User acceptance enablers in individual decision making about technology: toward an integrated model. Decis Sci J 2003;33(2): 297–316. https://doi.org/10.1111/j.1540-5915.2002.tb01646.x.
[60] Amin H, Hamid MRA, Tanakinjal GH, Lada S. Undergraduate attitudes and expectations for mobile banking. J. Int. Bank Comm 2006;11(3):2006–12.
[61] Lee HJ, Cho HJ, Xu W, Fairhurst A. The influence of consumer traits and demographics on intention to use retail self-service checkouts. Market Intell Plan 2010;28(1):46–58.
[62] Swinney JL, Runyan RC, Huddleston P. Differences in reported firm performance by gender: does industry matter? J Dev Entrepreneurship 2006;11(02):99–115.
[63] Bae BY, Lee JH. The moderating effects of gender and major on the relationship between entrepreneurial orientation and entrepreneurial intention. Asia-Pacific J Bus Ventur Entrepreneurship 2018;13(6):63–74.
[64] Joshi A, Roh H. The role of context in work team diversity research: A meta-analytic review. Acad Manag J 2009;52(3):599–627.
[65] Brush CG, De Bruin A, Welter F. A gender-aware framework for women's entrepreneurship. Int J Gender Entrepreneurship 2009;1(1):8–24.
[66] Marlow S, Patton D. All credit to men? Entrepreneurship, finance, and gender. Entrepreneurship Theory Pract 2005;29(6):717–35.
[67] Global gender gap report. available at: https://www.weforum.org/publications/global-gender-gap-report-2023/; 2023.
[68] Elliott C, Mantler J, Huggins J. Exploring the gendered entrepreneurial identity gap: implications for entrepreneurship education. Int. J. Gender and Entrepreneur. 2021 Jun 21;13(1):50–74.
[69] Churchill Jr GA. A paradigm for developing better measures of marketing constructs. J Market Res 1979;16(1):64–73. https://doi.org/10.1177/002224377901600110.
[70] Kline TJ. Psychological testing: a practical approach to design and evaluation. Sage publication; 2005.
[71] Rodríguez-de-Dios I, van Oosten JM, Igartua JJ. A study of the relationship between parental mediation and adolescents' digital skills, online risks and online opportunities. Comput Hum Behav 2018;82:186–98. https://doi.org/10.1016/j.chb.2018.01.012.
[72] Manco-Chavez JA, Uribe-Hernandez YC, Buendia-Aparcana R, Vertiz-Osores JJ, Isla Alcoser SD, Rengifo-Lozano RA. Integration of ICT and digital skills in times of the pandemic COVID-19. Int J High Educ 2020;9(9):11–20. https://doi.org/10.5430/ijhe.v9n9p1.
[73] Lumpkin GT, Dess GG. Clarifying the entrepreneurial orientation construct and linking it to performance. Acad Manag Rev 1996;21(1):135–72. https://doi.org/10.5465/amr.1996.9602161568.
[74] Bolton DL, Lane MD. Individual entrepreneurial orientation: development of a measurement instrument. Educ + Train 2012;54(2/3):219–33. https://doi.org/10.1108/0040091121210314.
[75] Taatila V, Down S. Measuring entrepreneurial orientation of university students. Educ Training 2012;54(8):244–760. https://doi.org/10.1108/00400911211274864.
[76] Warschauer M. Technology and social inclusion: rethinking the digital divide. United States, Massachusetts, Cambridge: MIT Press; 2004.
[77] Shair W, Waheed A, Kamran MM, Kubra N. Digital divide in Pakistan: barriers to ICT usage among the individuals of Pakistan. J Econ Impact 2022;4(3):196–204. https://doi.org/10.52223/jei4032206.
[78] Abdullah A. Digital divide and caste in rural Pakistan. Inf Soc 2015;31(4):346–56. https://doi.org/10.1080/01972243.2015.1040936.
[79] Ahmed AMIN. 80pc of Pakistan's poor live in rural areas. https://www.dawn.com/news/1444874. [Accessed 25 July 2023].
[80] Jamil S. The monitored watchdogs: journalists' surveillance and its repercussions for their professional and personal lives in Pakistan. Journal Stud 2021;22(7): 878–95.
[81] Jamil S. A widening digital divide and its impacts on existing social inequalities and democracy in Pakistan. In: Ragnedda M, Gladkova A, editors. Digital inequalities in the global South. Global transformations in media and communication research - a palgrave and iamcr series. Cham: Palgrave Macmillan; 2020. p. 59–78. https://doi.org/10.1007/978-3-030-32706-4_4.
[82] Figueroa-Domecq C, Palomo J, Flecha-Barrio MD, Segovia-Perez M. Technology double gender gap in tourism business leadership. Inf Technol Tourism 2020 Mar; 22(1):75–106.
[83] Anderson JC, Gerbing DW. Structural equation modeling in practice: a review and recommended two-step approach. Psychol Bull 1988;103(3):411. https://doi.org/10.1037/0033-2909.103.3.411. 1988.
[84] Fornell C, Larcker DF. Evaluating structural equation models with unobservable variables and measurement error. J Market Res 1981;18(1):39–50.
[85] Davcik S. The use and misuse of structural equation modeling in management research: A review and critique. J Adv Manag Res 2014;11(1):47–81.
[86] Teo T, Zhou M. Explaining the intention to use technology among university students: A structural equation modeling approach. J Comput Higher Educ 2014; 26:124–42.
[87] Gefen D, Straub D, Boudreau MC. Structural equation modeling and regression: Guidelines for research practice. Commun Assoc Inf Syst 2000;4(1):7.
[88] Hult GTM, Hair Jr JF, Proksch D, Sarstedt M, Pinkwart A, Ringle CM. Addressing endogeneity in international marketing applications of partial least squares structural equation modeling. J Int Market 2018;26(3):1–21. https://doi.org/10.1509/jim.17.0151.
[89] Sande JB, Ghosh M. Endogeneity in survey research. Int J Res Market 2018;35(2): 185–204.
[90] Henseler J, Fassott G. Testing moderating effects in PLS path models: An illustration of available procedures. In: Handbook of partial least squares: Concepts, methods and applications; 2010. p. 713–35.
[91] Fornell M, Larcker DF. Structural eodelsquation models with unobservable variables and measurement error, Algebra and Statistics, 18. New York: John Wiley & Sons; 2011. p. 427. https://doi.org/10.1177/002224378101800313.
[92] Musil CM, Jones SL, Warner CD. Structural equation modeling and its relationship to multiple regression and factor analysis. Res. Nurs Health 1998;21 (3):271–81.
[93] Fornell C. Issues in the application of covariance structure analysis: a comment. J Consum Res 1983;9(4):443–8.
[94] Bentler PM. Comparative fit indexes in structural models. Psychol Bull 1990;107 (2):238. https://doi.org/10.1037/0033-2909.107.2.238.
[95] Tucker LR, Lewis C. A reliability coefficient for maximum likelihood factor analysis. Psychometrika 1973;38(1):1–10. https://doi.org/10.1007/BF02291170. 1973.
[96] Bentler PM, Bonett DG. Significance tests and goodness of fit in the analysis of covariance structures. Psychol Bull 1980;88(3):588. https://doi.org/10.1037/0033-2909.88.3.558.
[97] Xia Y, Yang Y, Rmsea CFI. TLI in structural equation modeling with ordered categorical data: the story they tell depends on the estimation methods. Behav Res Methods 2019;51:409–28. https://doi.org/10.3758/s13428-018-1055-2.
[98] Hu LT, Bentler PM. Cutoff criteria for fit indexes in covariance structure analysis: conventional criteria versus new alternatives. Struct Equ Model: A Multidiscip J 1999 Jan 1;6(1):1–55.
[99] Bentler PM, Bonett DG. Significance tests and goodness of fit in the analysis of covariance structures. Psychol Bull 1980;88(3):588. https://doi.org/10.1037/0033-2909.88.3.558.
[100] Marsh HW, Hau KT, Balla JR, Grayson D. Is more ever too much? The number of indicators per factor in confirmatory factor analysis. Multivariat Behav Res 1998; 33(2):181–220.
[101] Bentler PM. On the fit of models to covariances and methodology to the Bulletin. Psychol Bull 1992;112(3):400. https://doi.org/10.1037/0033-2909.112.3.400.
[102] Sahoo M. Structural equation modeling: Threshold criteria for assessing model fit. In: Methodological issues in management research: Advances, challenges, and the way ahead. Emerald Publishing Limited; 2019. p. 269–76.
[103] Chen F, Curran PJ, Bollen KA, Kirby J, Paxton P. An empirical evaluation of the use of fixed cutoff points in RMSEA test statistic in structural equation models. Sociol Meth Res 2008;36(4):462–94.

[104] Yuan KH, Chan W. Measurement invariance via multigroup SEM: Issues and solutions with chi-square-difference tests. Psychol Meth 2016;21(3):405.
[105] Kamberidou I. Distinguished women entrepreneurs in the digital economy and the multitasking whirlpool. J Innov Entrepreneur 2020 Jan 27;9(1):3.
[106] Hawsawi Z. Unpacking the dynamics of digital entrepreneurship: Managing work-family boundaries among women entrepreneurs. J Inf Technol Manag 2023;15 (Special issue):202–35.
[107] Perifanou M, Economides AA. Gender digital divide in Europe. Int J Bus Humanit Technol 2020;10(4). https://doi.org/10.30845/ijbht.v10n4p2.
[108] Ojediran F, Anderson A. Women's entrepreneurship in the global South: empowering and emancipating? Adm Sci 2020;10(4):87. https://doi.org/10.3390/admsci10040087.
[109] Troisi O, Fenza G, Grimaldi M, Loia F. Covid-19 sentiments in smart cities: the role of technology anxiety before and during the pandemic. Comput Hum Behav 2022;126:106986. https://doi.org/10.1016/j.chb.2021.106986.
[110] Epstein D, Nisbet EC, Gillespie T. Who's responsible for the digital divide? Public perceptions and policy implications. Inf Soc 2011;27(2):92–104. https://doi.org/10.1080/01972243.2011548695.
[111] Shirazi F, Ngwenyama O, Morawczynski O. ICT expansion and the digital divide in democratic freedoms: an analysis of the impact of ICT expansion, education and ICT filtering on democracy. Telematics Inf 2010 Feb 1;27(1):21–31.
[112] Adeleke R. Digital divide in Nigeria: the role of regional differentials. Afr J Sci, Technol, Innov Dev 2021;13(3):333–46.
[113] De Fontenay A, Beltran F. Inequality and economic growth: should we be concerned by the digital divide. Int Telecommun Soc 2018;17:23–37.
[114] Venkat K. Delving into the digital divide. IEEE Spectrum 2002;39(2):14–5. https://doi.org/10.1109/6.981859.
[115] Visvizi A, Troisi O, Grimaldi M. Digital divide and entrepreneurial orientation in the global South: quantifying and explaining the nexus. In: Visvizi A, Troisi O, Grimaldi M, editors. Research and innovation forum 2022. RIIFORUM 2022. Springer proceedings in complexityproceedings in complexity. Cham: SpringerRIIFORUM 2022. Springer; 2023. 10.1007/978-3-031-19560-0_62.
[116] Alowayr A. Determinants of mobile learning adoption: extending the unified theory of acceptance and use of technology (UTAUT). Int. J. Inf. Learn. Technol. 2022;39(1):1–12.

Cristian Barra is an Associate Professor of Economics in the Department of Economics and Statistics (DISES), University of Salerno (Italy). He holds a PhD in Economics of the Public Sector at the University of Salerno (Italy) and a M.A. in Economics and Finance at the University of Naples, Federico II (Italy). His research interests include microeconomics analysis of production processes, financial and education economics, economics of innovation and institutional economics.

Mara Grimaldi is a Research fellow at the University of Salerno, Department of Business Science, Management & Innovation Systems. She is PhD in "Marketing and communication". Her main areas of interest are: services marketing and management, information and knowledge management, strategic innovation management. She participated in several national and international conferences as a chair and is guest editors of different special issues on international journals (Transforming Government: People, Process and Policy, European Journal of Innovation Management). Currently, she is engaged in a series of research projects that aim at exploring the opportunities and the criticalities of Big Data analysis and data-driven decision-making in business and management.

Dr. Amina Muazzam received her PhD degree in Applied Psychology on HEC competitive scholarship. She is Charles Wallace fellow and actively working in the Mental Health division in Manchester University, UK. She has been elected "Director at Large" for the International Council for Psychologists for two consecutive terms. She has presented her work across Europe, Canada, America and Far East Asia. She also worked as director research and in-charge central research lab where she diligently worked to enhance the quality of research in university. She has developed World Health Organization Rehabilitation Policy 2030 as a world lead for mental health groups. She is a PI/co-PI of several research projects. She is working as a core member of technical work for launch of presidential tele-mental helpline. She is serving as a tenured professor and Chairperson Department of Applied Psychology.

Orlando Troisi is a Full Professor in Economics and Business Management at the Department of Management & Innovation Systems, University of Salerno. He is currently a member of the Executive board of the research Center "SIMAS - Systems for Innovation and Sustainable Management" at the University of Salerno. He is referent of the Italian Society of Management (SIMA) for the University of Salerno. He has been Visiting Researcher and Visiting Professor at the Epoka University. His main research interests focus on business management, strategic innovation management, data-driven management, services management. He is author of numerous papers published in national and international journals, including Industrial Marketing Management, Journal of Business and Industrial Marketing, Marketing Theory, Journal of Service Theory and Practice, European Journal of Innovation Management, TQM Journal, Computers in Human Behavior.

Anna Visvizi, PhD (dr hab.), is an economist and political scientist, editor, researcher, and political consultant with extensive experience in academia, think-tank and government sectors in Europe and the United States, including the OECD. She is an Associate Professor at the SGH Warsaw School of Economics, Poland, Visiting Professor at Effat University, Saudi Arabia, and a Research Fellow at the Institute for Hellenic Growth and Prosperity (IHGP), at the American College of Greece. Her expertise covers issues pertinent to the intersection of politics, economics and ICT, especially AI and blockchain, in such domains as smart cities/smart villages, geopolitics, and business management.