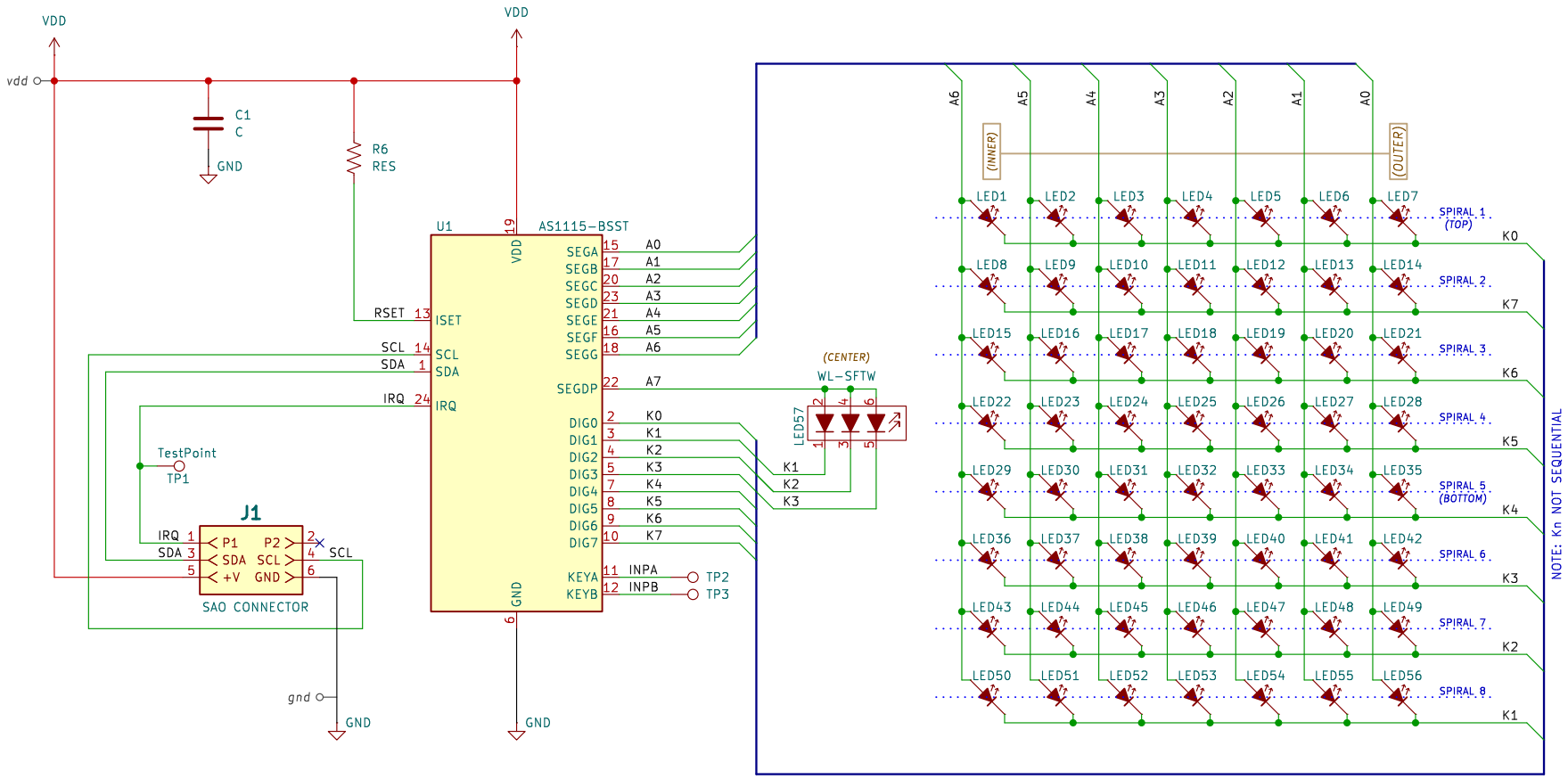

Responsible dept.	Technical reference	Document type	Document status
HACK A DAY	~~Created by~~ REDRAWN: CHRIS LOTT THE STUMBLER	SCHEMATIC	AS-IS
	Approved by	Title, Supplementary title: SUPERCON 2024	PETAL MATRIX REDRAWN
		Rev. A	Date of issue 2024-11-10
		Lang. EN	Sheet 1/1

A4