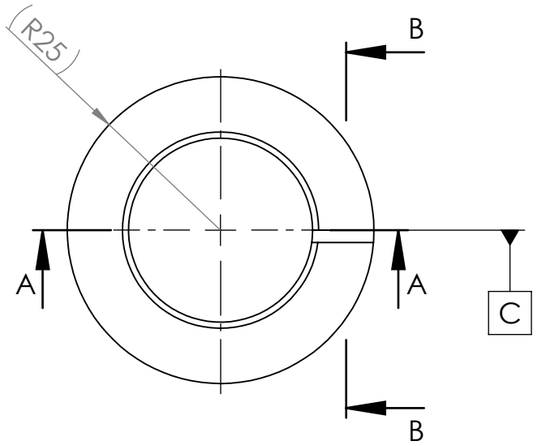

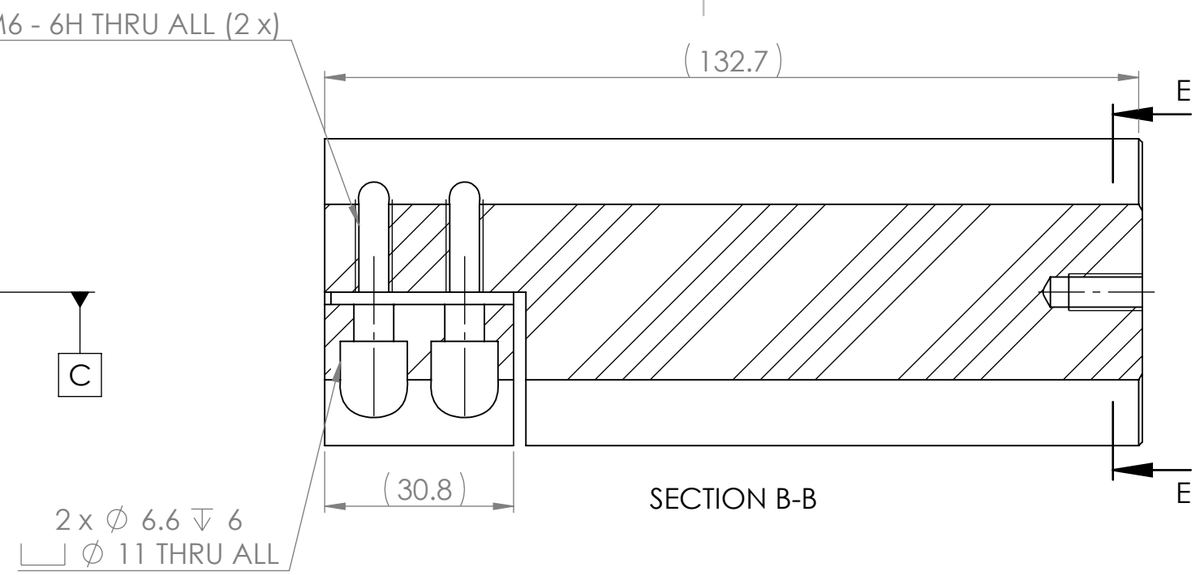

SECTION B-B

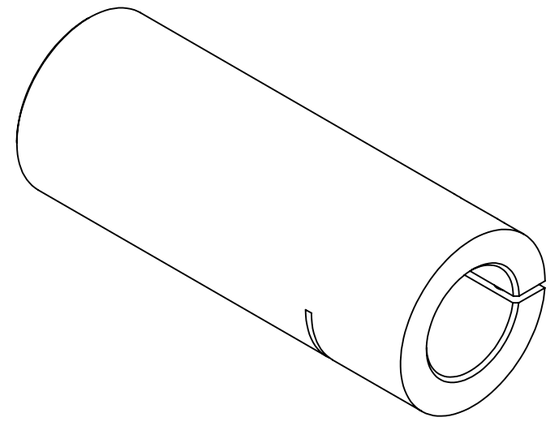

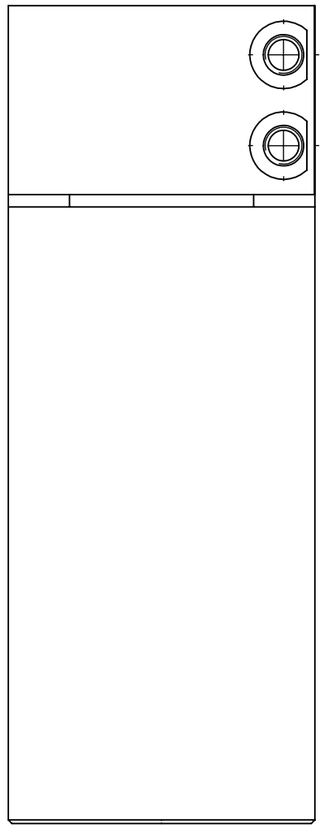

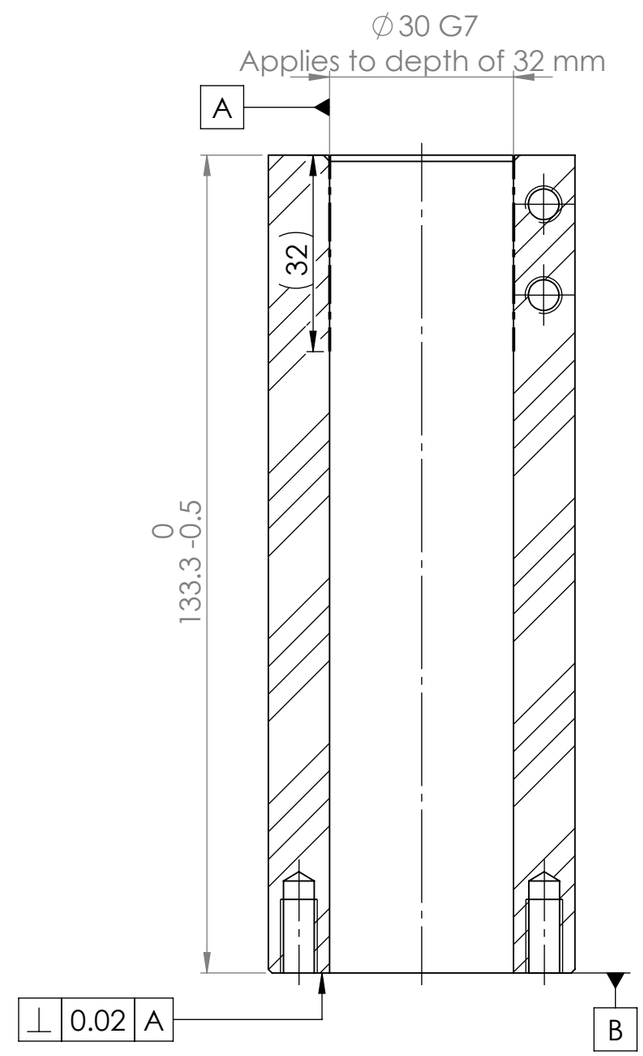

SECTION A-A

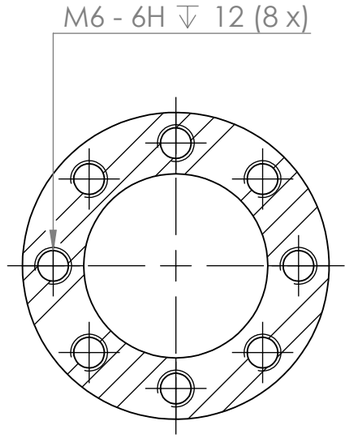

SECTION E-E

Undimensioned edges

-0.2
-0.5
+0.2

Ra 1.6

General roughness:

Minimal Dimensioned TPD

Geometry of .STEP file is leading

For all surfaces ⌓ 0.2 A B C

For all cylindrical holes ⌖ ∅ 0.3 A B C

Tolerances on cylindrical hole diameter +/-0.1

Tolerances on hole/tread depth 0/+1

NOBLEO TECHNOLOGY

DIMENSIONS ARE IN **MM**
INCL SURFACE/AFTER TREATMENT
UNLESS OTHERWISE SPECIFIED
DIM WITHOUT TOLERANCE ISO 2768mK
GEOMETRIC TOLERANCES ISO 1101
BREAK SHARP EDGES ISO 13715
ROUGHNESS ISO 1302

PROPRIETARY AND CONFIDENTIAL
THE INFORMATION CONTAINED IN THIS DRAWING IS THE SOLE PROPERTY OF NOBLEO TECHNOLOGY B.V. ANY REPRODUCTION WITHOUT THE WRITTEN PERMISSION OF NOBLEO TECHNOLOGY B.V. IS PROHIBITED.

DOCUMENT STATUS

CREATED BY
CREATION DATE
APPROVED BY
APPROVAL DATE

MATERIAL
1.4305 (X8CrNiS18-9)

SURFACE/HEAT/AFTER TREATMENT
Untreated/Uncoated

ESTIMATED MASS: 1.27 KG

DRW NR
PB-P-0102 -

REVISION

TITLE
SHOULDER PILLAR

SHEET 1 OF 1

SCALE 1:1

A3

SOLIDWORKS Educational Product. For Instructional Use Only.