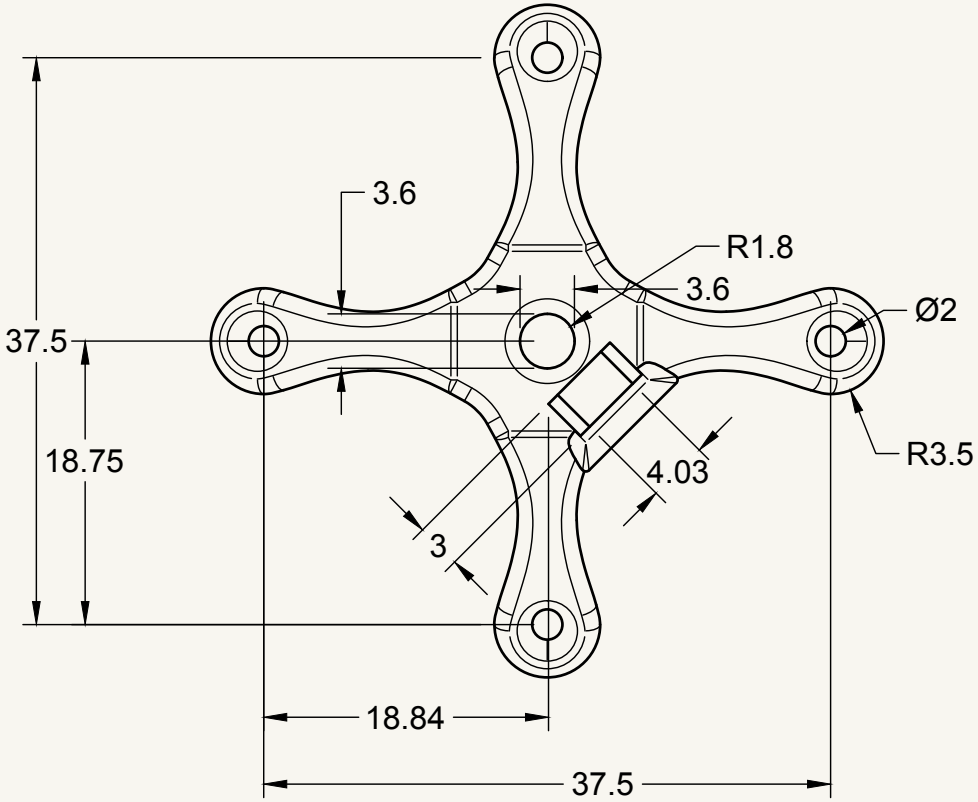

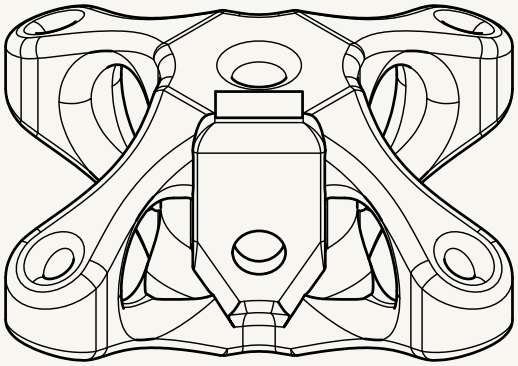

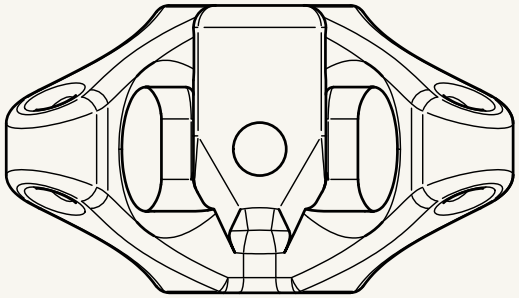

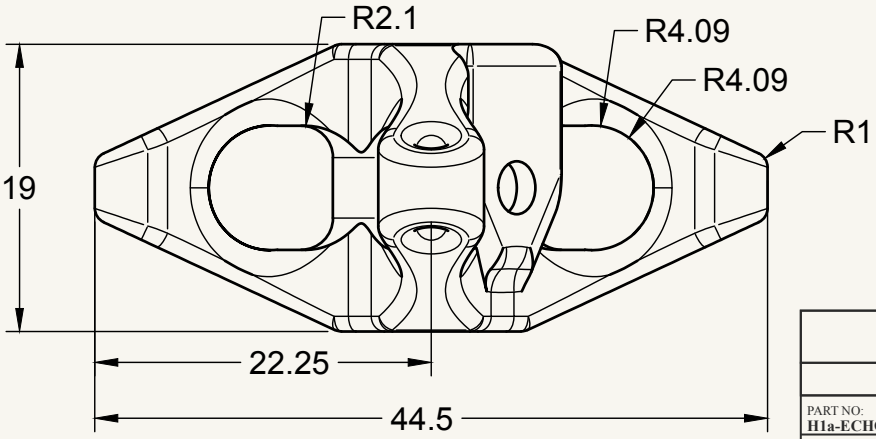

HYSTERESIS ANATOMICAL COMPONENTS HIa - Medium Knuckle Assembly			
KINETIC JOINT SPECIFICATION - ELECTROMAGNETIC FIELD APPARATUS			
PART NO: **H1a-ECHO-001**	MATERIAL: **POLYMER**	SCALE: **2:1**	SHEET: **1 OF 1** CONFIDENTIAL
DATE: **AUG 2025**	TOLERANCE: **±0.1mm**	REV: **A**	DRWG NO: **H1a_Echo_knuckle_md**