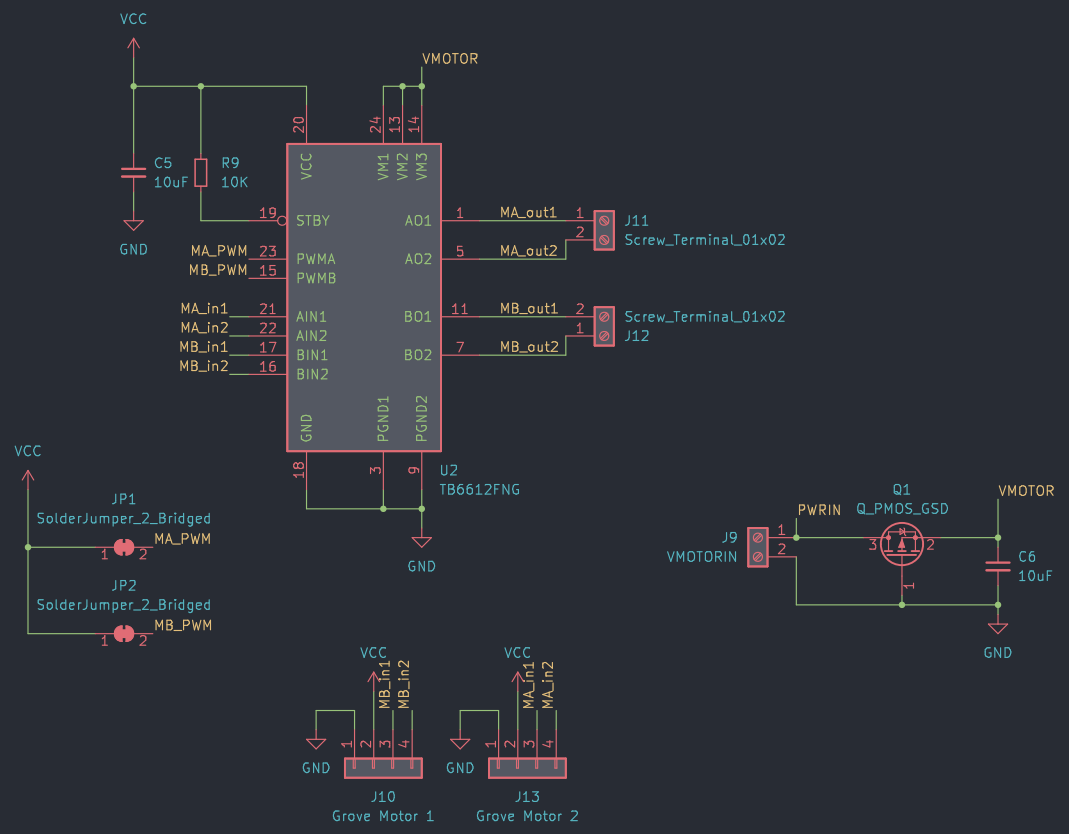
VCC
VMOTOR
C5
10uF
R9
10K
GND
20
24
13
14
VCC
VM1
VM2
VM3
19
STBY
MA_PWM 23
PWMA
MB_PWM 15
PWMB
MA_in1 21
AIN1
MA_in2 22
AIN2
MB_in1 17
BIN1
MB_in2 16
BIN2
GND
PGND1
PGND2
18
3
9
AO1
AO2
BO1
BO2
1
MA_out1
5
MA_out2
11
MB_out1
7
MB_out2
J11
Screw_Terminal_01x02
Screw_Terminal_01x02
J12
U2
TB6612FNG
GND
VCC
JP1
SolderJumper_2_Bridged
MA_PWM
JP2
SolderJumper_2_Bridged
MB_PWM
VCC
MB_in1
MB_in2
GND
J10
Grove Motor 1
VCC
MA_in1
MA_in2
GND
J13
Grove Motor 2
J9
VMOTORIN
PWRIN
Q1
Q_PMOS_GSD
VMOTOR
C6
10uF
GND