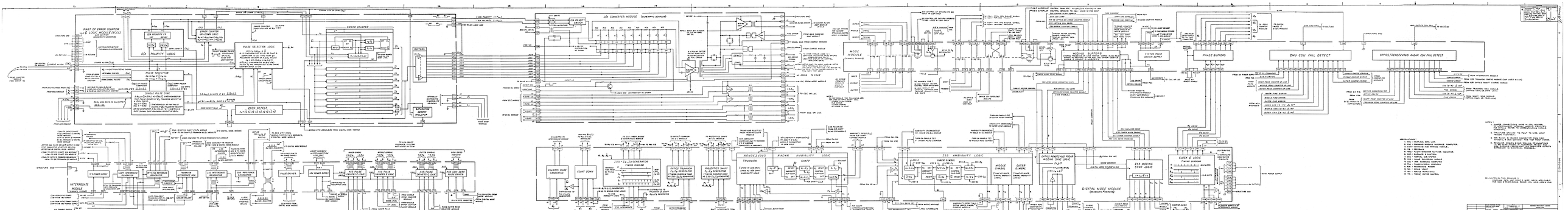
FAST OF ERROR COUNTER & LOGIC MODULE (ECCS)
C/A COMPUTER MODULE (DOMESTIC ALTITUDE)
MODE MODULE (MODES, DIGITAL)
MODING BUFFERS
A MODE PULSE DRIVER SUPPLY
PHASE BUFFERS
IWU COU FAIL DETECT
OPTICS/TRANSCEIVERS RADAR COU FAIL DETECT
INTERROGATE MODULE
DIGITAL MODE MODULE (MODES, DIGITAL)
ERROR COUNTER
PULSE SELECTION LOGIC
C/A POLARITY LOGIC
SINGLE PULSE ZING
ECCS DETECT
BUFFERS
SEPARATION DETECT BUFFER
ZIS AMBIGUITY LOGIC
ZIS MODING SYNC LOGIC
CLOCK & LOGIC TIMING SYNC
MIDDLE SYNCHRO
OUTER SYNCHRO
OPTICS TRANSCEIVER RADAR MODING SYNC LOGIC
ZULAPTIC PULSE GENERATOR
COUNT DOWN
OPTICS TRANSCEIVER RADAR AMBIGUITY LOGIC
ZULAPTIC SHIFT REGISTER
TRANSCEIVER
RENDEZVOUS RADAR AMBIGUITY LOGIC
ZULAPTIC SHIFT REGISTER
ZULAPTIC SHIFT REGISTER
ZULAPTIC SHIFT REGISTER

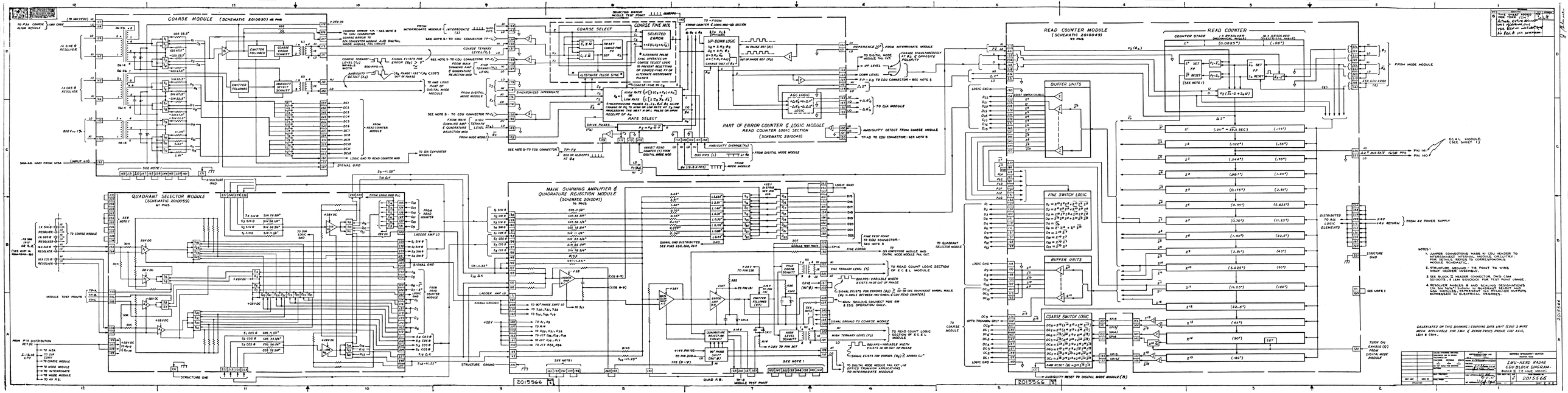

NOTES:

1. JUMPER CONNECTIONS MADE IN CDU HEADER TO INTERCONNECT INTERNAL MODULE CIRCUITRY. PINS ARE REFERENCED TO CORRESPONDING MODULE SCHEMATIC.
2. STRUCTURE GROUND - TIE POINT TO WIRE WRAP HEADER ASSEMBLY.
3. SEE BLOCK III HEADER CONNECTOR, DWG CSM 1001031, & LESS 2010001 FOR TEST POINT USAGE.
4. RESOLVER ANGLES Φ AND SCALING DESIGNATIONS (SIN, SIN/3, SIN/11 SHOWN IN QUADRANT SELECT AND MSA MODULES) REPRESENT 1X RESOLVER OUTPUTS EXPRESSED IN ELECTRICAL DEGREES.

DELINEATED ON THIS DRAWING (COUPLING DATA UNIT (CDU) 2 WIRE MECH. INPUT/DISABLE FOR IMU & SERVETRUS FROM CDU AXIS, LEN & CSM.