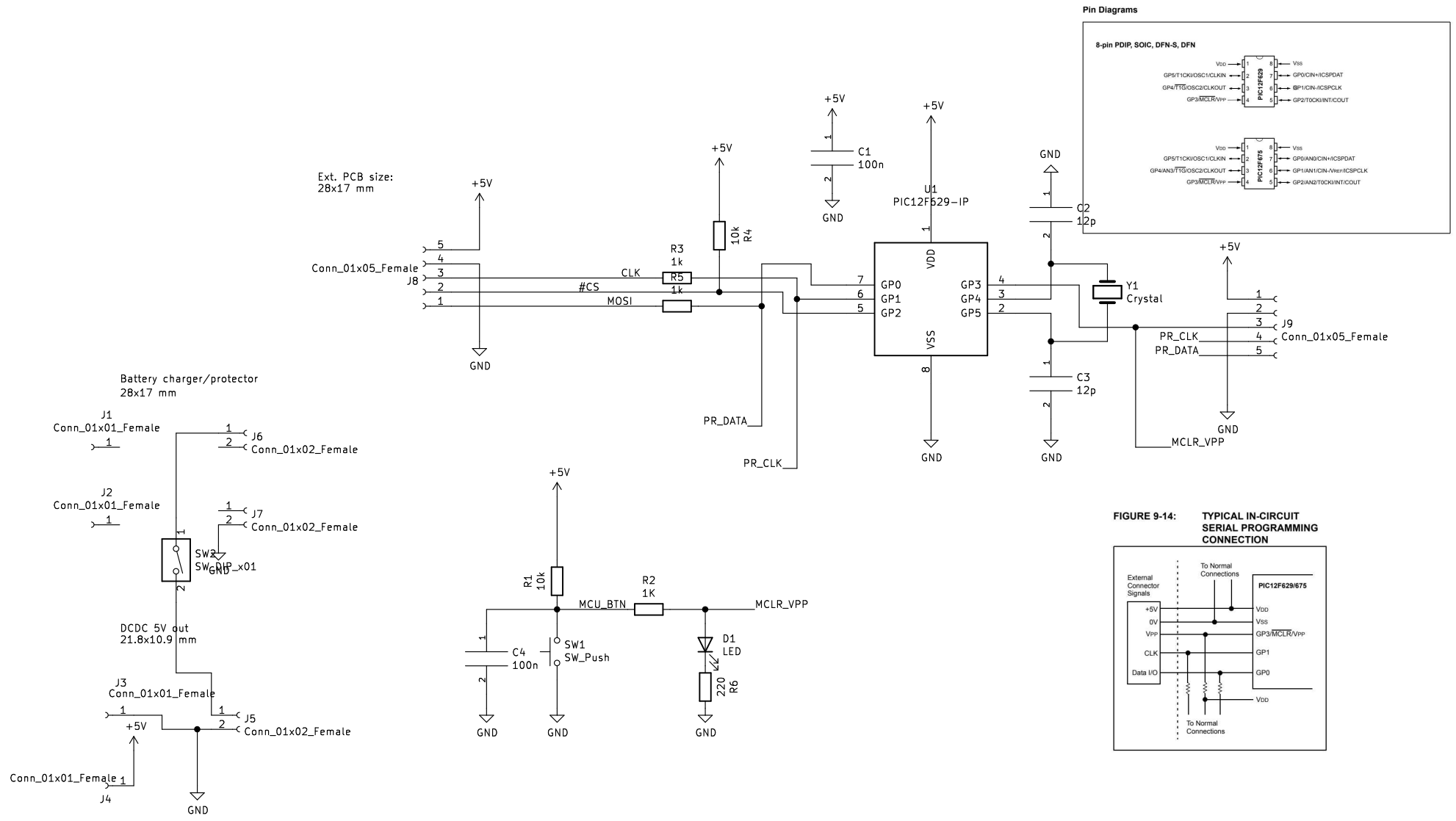

FIGURE 9-14: TYPICAL IN-CIRCUIT SERIAL PROGRAMMING CONNECTION

Enrico Sanino, (c) 2022

Sheet: /
File: edo_splay.sch

Title: EdoSplay

Size: A4	Date: 08/2022	**Rev:** V0.1
KiCad E.D.A. kicad (5.1.10)-1		Id: 1/1