Design Proposal: Mach-Zehnder Interferometer

Demetrio Sartiano desar@teleco.upv.es

***Abstract*—This report outlines the design of a Mach-Zehnder interferometer intended for silicon-on-insulator fabrication, utilizing strip waveguides. Design decisions are supported by simulated results and analytical assessments. A preliminary layout mask is also presented to facilitate future fabrication and automated testing.**

I. INTRODUCTION

THE Mach-Zehnder interferometer (MZI) is a device that measures relative phase shift variations between two beams derived from a single source. Various optical modulators, including electro-optic and thermo-optic modulators, have been developed based on the MZI for photoelectronic integration. In this paper, we present a proposed Mach-Zehnder interferometer along with its simulation results.

II. WAVEGUIDE MODELLING

In our design, a strip waveguide with a width of 500 nm and a height of 220 nm is used (Fig. 1).

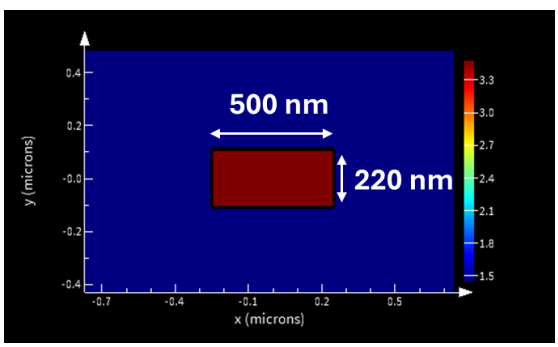

Fig. 1. Meshed waveguide with color code for refractive index and geometrical dimensions.

The simulated mode profiles of the waveguide are shown in the following figures. Figure 2 presents the electric field intensity for the TE mode, and Figure 3 shows that for the TM mode.

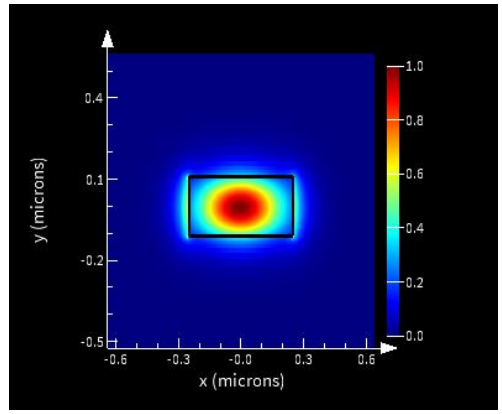

Fig. 2. Mode profile of the first TE mode.

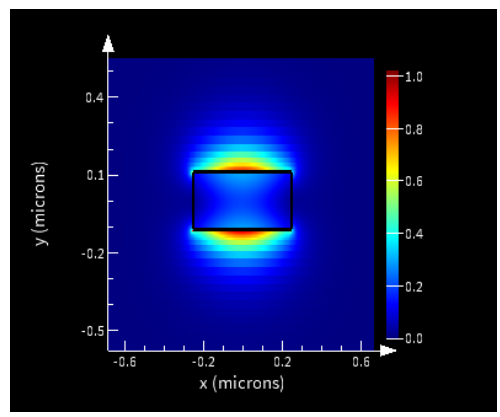

Fig. 3. Mode profile of the first TM mode.

The wavelength-dependent effective indexes (real and imaginary part) of the waveguide are provided in Figures 4 and 5, respectively.

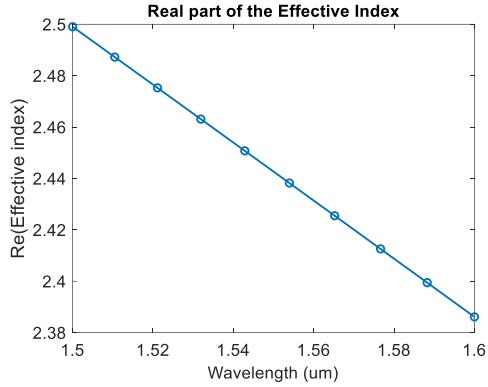

Fig. 4. Real part of the effective refractive index.

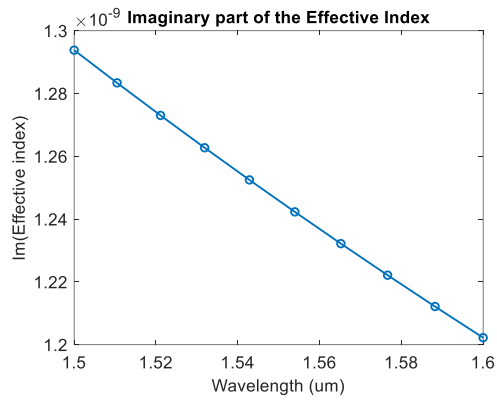

Fig. 5. Imaginary part of the effective refractive index.

As can be observed from the figures, the effective index decreases with increasing wavelength, whereas the group index increases (Fig. 6) with wavelength. Using MATLAB, the compact model of the waveguide was extracted using polynomial fit, the equation with the calculated factors is:

$$n_{eff}(\lambda) = 2.44 - 1.13(\lambda - \lambda_0) - 0.03(\lambda - \lambda_0)^2 \qquad (1)$$

with λ_0=1.55 µm.

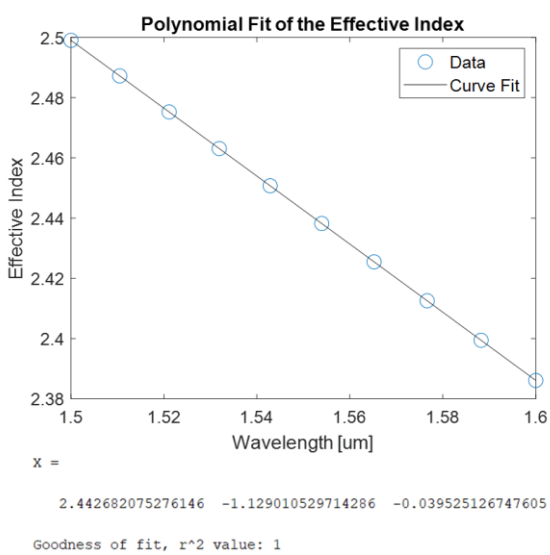

Fig. 6. Polynomial fit of the effective refractive index and obtained factors.

The group index (n_{group}) quantifies the speed of an optical pulse envelope, while the effective index (n_{eff}) relates to phase velocity. They are linked by

$$n_g = n_{eff} - \lambda \frac{dn_{eff}}{d\lambda} \qquad (2)$$

where λ is the wavelength. Thus, n_g depends on how n_{eff} changes with wavelength if n_{eff} decreases as wavelength increases (normal dispersion), n_g exceeds n_{eff}. This relationship is essential for understanding pulse propagation in waveguides. The simulated waveguide group index is shown in Figure 7.

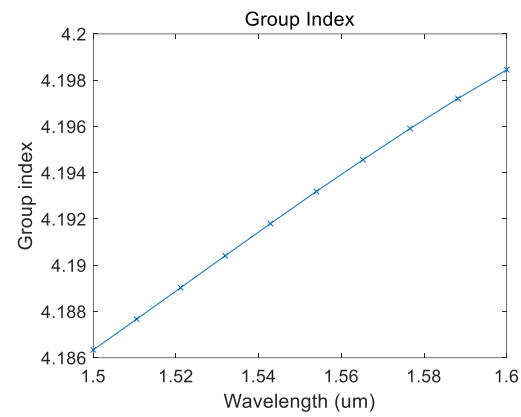

Fig. 7. Simulated waveguide group index.

III. Mach-Zehnder Interferometer

In its simplest form, a balanced MZI can be modeled as a two-port device consisting of a beam-splitter and a beam-combiner connected by waveguides that have identical geometries and material properties. In this configuration, the signals from the two branches combine constructively at the MZI output for any wavelength. To achieve varying levels of interference, a length asymmetry can be introduced between the branches. Additionally, the two waveguides may differ in their effective indices (n_{eff1}, n_{eff2}) and attenuation constants (α_1, α_2). Consequently, depending on the signal wavelength, the phase mismatch between the two combined signals leads to different interference conditions, ranging from fully constructive to completely destructive.

The input electric field vector at the MZI input is denoted as E_i. At the output of the beam-splitter, the complex electric fields in the upper and lower branches are given by

$$E_{i1} = E_{i2} = \frac{1}{\sqrt{2}} E_i \qquad (1)$$

After propagation between the Y-branches, the electric fields at the input of the beam-combiner can be expressed as

$$E_{o1} = E_{i1} \cdot e^{-j\beta_1 L_1 - \frac{\alpha_1}{2} L_1} \qquad (2)$$

$$E_{o2} = E_{i2} \cdot e^{-j\beta_2 L_2 - \frac{\alpha_2}{2} L_2} \qquad (3)$$

where $\beta_{1,2} = (2\pi/\lambda)n_{\text{eff}1,2}$ represent the propagation constants of the upper and lower branches. At the beam-combiner, the amplitude of each input field is equally split between the fundamental mode and radiation modes [1]. Consequently, the output field is

$$E_o = \frac{1}{\sqrt{2}} \cdot (E_{o1} + E_{o2}) \qquad (4)$$

Substituting Equations (1)–(3) into Equation (4) yields

$$E_o = \frac{1}{2} \cdot E_i \left(e^{-j\beta_1 L_1 - \frac{\alpha_1}{2} L_1} + e^{-j\beta_2 L_2 - \frac{\alpha_2}{2} L_2} \right) \qquad (5)$$

Since light intensity is proportional to the square of the electric field amplitude, the input-output intensity ratio of the MZI is given by

$$I_o = \frac{1}{4} \cdot I_i \mid e^{-j\beta_1 L_1 - \frac{\alpha_1}{2} L_1} + e^{-j\beta_2 L_2 - \frac{\alpha_2}{2} L_2} \mid^2 \qquad (6)$$

Equation (6) represents the general transfer function of an unbalanced MZI. However, for the purposes of this work, propagation losses associated with α_1 and α_2 can be neglected. Furthermore, the propagation constants in both branches may be considered equal. Under these assumptions, Equation (6) simplifies to

$$I_o = \frac{1}{2} \cdot I_i (1 + \cos(\beta \Delta L)) \qquad (7)$$

where $\Delta L = L_1 - L_2$ and $\beta_1 = \beta_2 = \beta$. Figure 4 illustrates the transfer function of an unbalanced MZI with a path length difference of 100 µm for the TE mode. The interval between successive peaks of the transfer function—known as the free spectral range (FSR)—is calculated as [1]

$$\text{FSR}(\lambda) = \frac{\lambda^2}{\Delta L \cdot n_g(\lambda)} \qquad (8)$$

The MZI model for simulation was built using Lumerical INTERCONNECT software [2]. Grating couplers were included at the input and output of the model to enable light coupling. In this work, the interference observed at the MZI output is generated solely by the length difference between the two branches. Consequently, both waveguides were modeled with identical cross-section geometry and material properties.

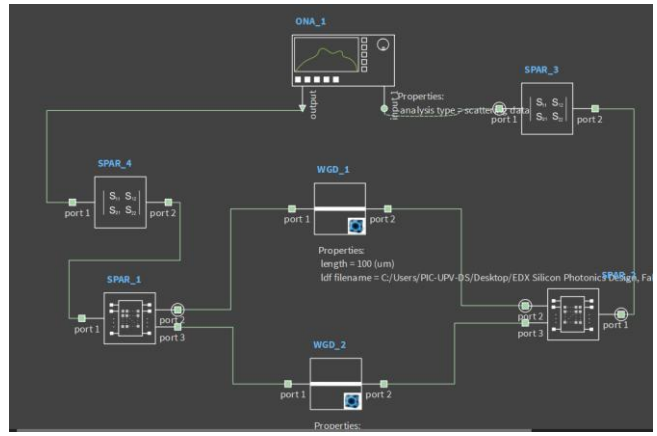

Fig. 8. MZI model implemented in the *INTERCONNECT* software.

The two waveguides (labeled "WGD_1" and "WGD_2") were modeled using information exported from the modal analysis. The gratings and Y-branches were characterized using S-parameters obtained from the device library of this course [3].

Figure 9a shows the MZI transmission spectra, Figure 9b presents the grating coupler response, and Figure 9c illustrates the combined response of the MZI with integrated grating couplers.

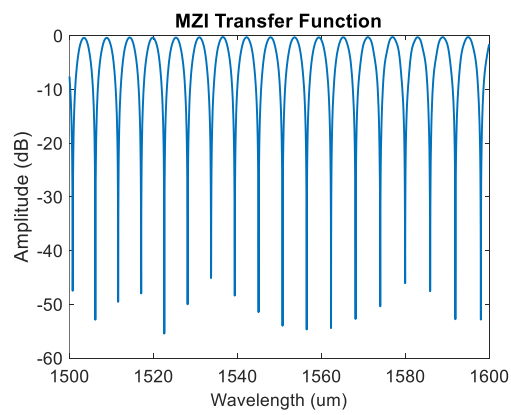

(a)

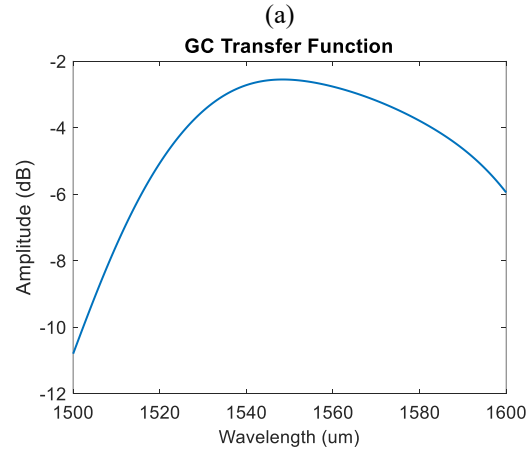

(b)

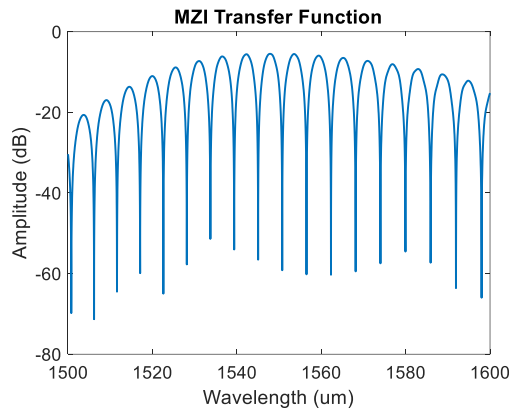

(c)

Fig. 9. (a) Simulated transmission spectra of the unbalanced MZI for different path length differences (ΔL). (b) Spectral response of the grating coupler used at the input and output ports. (c) Overall response of the MZI with integrated grating couplers, showing the combined effect of MZI interference and grating coupler bandwidth.

The simulated FSR values, shown in Figure 10, need to be confirmed through experimental measurement. For this reason, the chip was designed with five MZIs featuring path length differences (ΔL) of 40, 60, 80, 100, and 120 µm, enabling direct comparison between simulation and fabricated device performance.

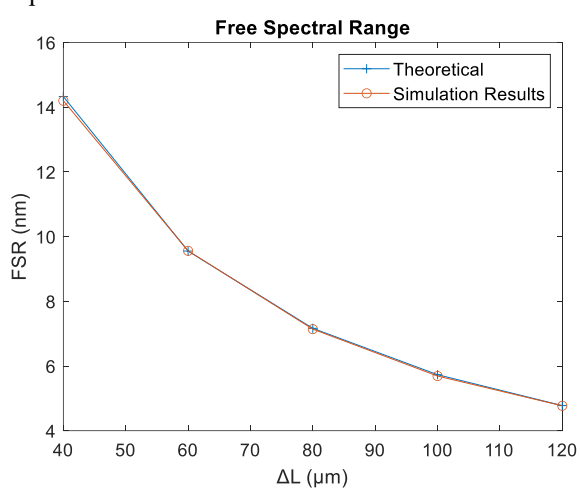

Fig. 10: Simulated free spectral range (FSR) as a function of the path length difference (ΔL) for the unbalanced MZI. The FSR decreases with increasing ΔL, following the relationship $FSR(\lambda) = \lambda^2/(\Delta L\ n_g(\lambda))$. These simulated values serve as the reference for experimental validation using the fabricated chip.

TABLE I
SIMULATED FSR VS ΔL

ΔL (µm)	FSR (nm)
40	14.2
60	9.56
80	7.14
100	5.69
120	4.77

Figure 11 presents the layout of the fabricated chip, which includes the five MZIs with varying path length differences (ΔL = 40, 60, 80, 100, and 120 µm), along with the input/output grating couplers for optical access and testing. A directional coupler is included to provide an alternative, wavelength-dependent splitting mechanism to the Y-branch, enabling comparison of splitting efficiency, extinction ratio, and compactness in the fabricated MZI test structure.

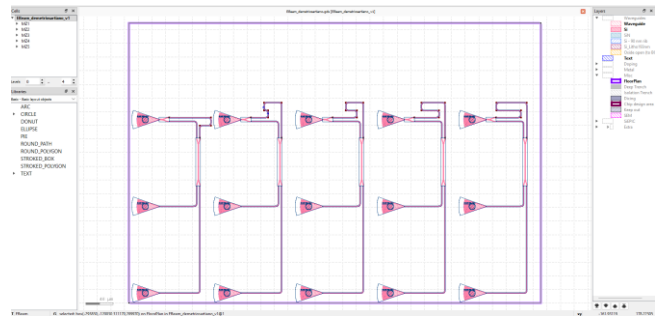

Fig. 11. Chip layout showing five MZIs with ΔL = 40–120 µm and integrated grating couplers for automated testing.

REFERENCES

Basic format for periodicals:
J. K. Author, "Name of paper," *Abbrev. Title of Periodical*, vol. x, no. x, pp. xxx-xxx, Abbrev. Month, year, doi: 10.1109.XXX.1234567.

Periodicals using article numbers:
J. K. Author, "Name of paper," *Abbrev. Title of Periodical*, vol. x, no. x, Abbrev. Month, year, Art. no. xxxxx, doi: 10.1109.XXX.1234567.

Examples:
[1] L. Chrostowski and M. Hochberg, "Silicon Photonics Design: From Devices to Systems", Cambridge University Press,
[2] Lumerical INTERCONNECT software. https://www.lumerical.com/tcad-products/interconnect/
[3] Components library, SiEPIC, University of Washington. http://goo.gl/B9IRn8