Mach-Zehnder Interferometer Performance Study

Haritha Kambalathmana

***Abstract*—The transmission spectrum of a silicon-based Mach-Zehnder Interferometer (MZI) is numerically simulated across multiple parameter configurations using the Finite-difference eigenmode (FDE) solver in Lumerical MODE and INTERCONNECT circuit simulations. The study examines how key design parameters including arm length difference, waveguide width, beam splitter coupling ratio, and operating temperature influence the spectral response and output intensity characteristics of the device. Compact waveguide models are derived and validated against simulation data, and a method for extracting the waveguide group index directly from the free spectral range is demonstrated.**

***Keywords*—Mach-Zehnder Interferometer, strip waveguide, free spectral range, quasi-TE mode, Lumerical INTERCONNECT, thermo-optic effect, FDE mode solver, group index, optical splitting ratio.**

I. Introduction

THE Mach-Zehnder Interferometer (MZI) is one of the most fundamental and widely adopted building blocks in silicon photonic integrated circuits (PICs). Owing to its compatibility with standard CMOS fabrication processes and its ability to precisely control light interference, the silicon-based MZI has attracted considerable research interest. Its versatility has enabled a broad range of applications, including high-speed optical modulators, reconfigurable optical switches, and wavelength-selective optical routers [1], [2].

In this report, the transmission spectrum of silicon-based MZI structures is numerically simulated and analysed across several design configurations. The investigation is structured in four stages. In the first stage, a standard silicon-on-insulator (SOI) waveguide with a rectangular cross-section of 500×220 nm^2 is considered. The fundamental quasi-transverse-electric (quasi-TE) mode is selected for propagation analysis, and the MZI performance is evaluated under both balanced and imbalanced arm configurations. In the second stage, the waveguide cross-section is modified to 600×220 nm^2, and the same simulations are repeated to assess the impact of waveguide geometry on the interferometric response. In the third stage, the thermal sensitivity of the imbalanced MZI is investigated for both waveguide geometries. The operating temperature is varied, and its effect on key spectral characteristics including the transmission gain and the free spectral range (FSR) is systematically monitored and compared. In the fourth stage, the effect of the beam splitter coupling ratio is examined by comparing a 100-0% ratio, representing total transmission to one arm, and a 70-30% ratio, representing asymmetric power division between the two arms.

The results demonstrate that the FSR, thermal tuning sensitivity, and fringe visibility of the MZI can be independently controlled through three design parameters: arm length difference, waveguide width, and splitting ratio. Specifically, doubling ΔL from 100 μm to 200 μm halves the FSR, widening the waveguide from 500 nm to 600 nm increases the FSR by approximately 3%, and a 3°C temperature increment shifts the transmission spectrum by approximately 1 nm each independently and without degrading the spectral periodicity of the device.

II. Theory

A. Mach-Zehnder Interferometer Configurations

A balanced MZI can be modelled as a 2-port device formed by a beam-splitter and a beam-combiner, connected by waveguides with identical geometries and material properties. With this configuration, the signals of the two branches are constructively combined at the MZI output for any wavelength, as illustrated in Figure 1.

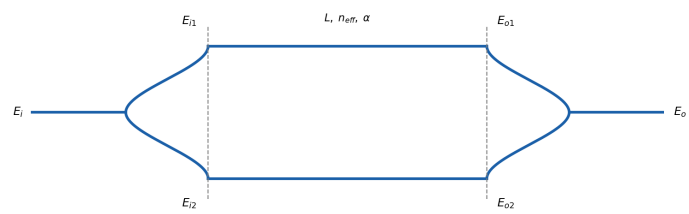

Figure 1. MZI in a balanced configuration. Both branches share the same length L, effective index n_{eff}, and propagation loss α.

To exploit varying levels of interference, a length asymmetry can be introduced between the two branches, as shown in Figure 2. The two waveguides may also exhibit differences in their effective refractive indices (n_{eff1}, n_{eff2}) and attenuation constants (α_1, α_2). Consequently, the phase mismatch between the two recombined signals produces interference ranging from fully constructive to fully destructive, depending on the signal wavelength.

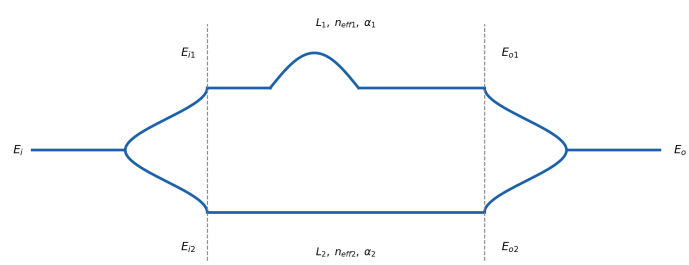

Figure 2. MZI in an imbalanced configuration. The upper and lower branches may have distinct lengths and material properties.

Let E_i denote the input electric field. At the output of the beam-splitter, the complex electric fields entering the upper and lower branches are:

$$E_{i1} = E_{i2} = \frac{1}{\sqrt{2}} E_i \tag{1}$$

After propagating through the respective arms, the fields at the beam-combiner input are:

$$E_{o1} = E_{i1} \cdot e^{-j\beta_1 L_1 - \frac{\alpha_1}{2} L_1} \tag{2}$$

$$E_{o2} = E_{i2} \cdot e^{-j\beta_2 L_2 - \frac{\alpha_2}{2} L_2} \tag{3}$$

where $\beta_{1,2} = (2\pi/\lambda)\, n_{\text{eff}1,2}$ are the propagation constants. At the beam-combiner:

$$E_o = \frac{1}{\sqrt{2}} (E_{o1} + E_{o2}) \tag{4}$$

Substituting Equations (1)–(3) into Equation (4):

$$E_o = \frac{1}{2} E_i \left(e^{-j\beta_1 L_1 - \frac{\alpha_1}{2} L_1} + e^{-j\beta_2 L_2 - \frac{\alpha_2}{2} L_2} \right) \tag{5}$$

The input-output intensity transfer function is:

$$I_o = \frac{1}{4} I_i \left| e^{-j\beta_1 L_1 - \frac{\alpha_1}{2} L_1} + e^{-j\beta_2 L_2 - \frac{\alpha_2}{2} L_2} \right|^2 \tag{6}$$

Neglecting propagation losses ($\alpha_1 = \alpha_2 \approx 0$) and assuming equal propagation constants ($\beta_1 = \beta_2 = \beta$), Equation (6) simplifies to:

$$I_o = \frac{1}{2} I_i \left(1 + \cos(\beta\, \Delta L)\right) \tag{7}$$

where $\Delta L = L_1 - L_2$. The free spectral range (FSR) is given by [3]:

$$\text{FSR} = \frac{\lambda^2}{\Delta L \cdot n_g(\lambda)} \tag{8}$$

where n_g is the group index:

$$n_g(\lambda) = n_{\text{eff}}(\lambda) - \lambda \cdot \frac{dn_{\text{eff}}(\lambda)}{d\lambda} \tag{9}$$

III. Simulation

A. Waveguide Mode Analysis: Lumerical MODE

Prior to the MZI transmission simulations, a modal analysis is performed using Lumerical MODE to characterise the spatial field distributions of the fundamental guided modes of the silicon strip waveguides. Two cross-sections are investigated: 500×220 nm^2 and 600×220 nm^2, both at $\lambda = 1550$ nm on a silicon-on-insulator (SOI) platform.

Figure 3 presents the normalised electric field (EF) intensity profiles of the TE and TM modes, and Figure 4 shows the corresponding quasi-TE and quasi-TM profiles obtained from the full vectorial mode solver.

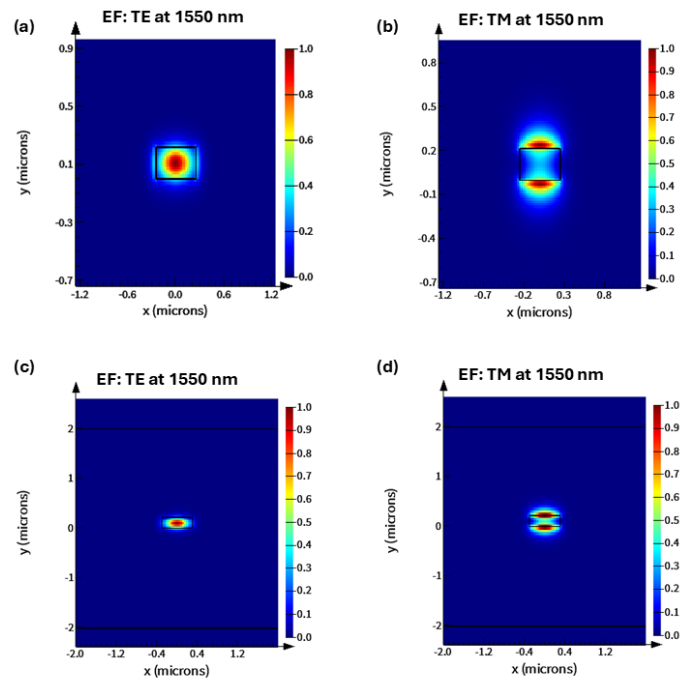

Figure 3. Normalised electric field profiles at 1550 nm: (a) TE mode, 500×220 nm^2; (b) TM mode, 500×220 nm^2; (c) TE mode, 600×220 nm^2; (d) TM mode, 600×220 nm^2.

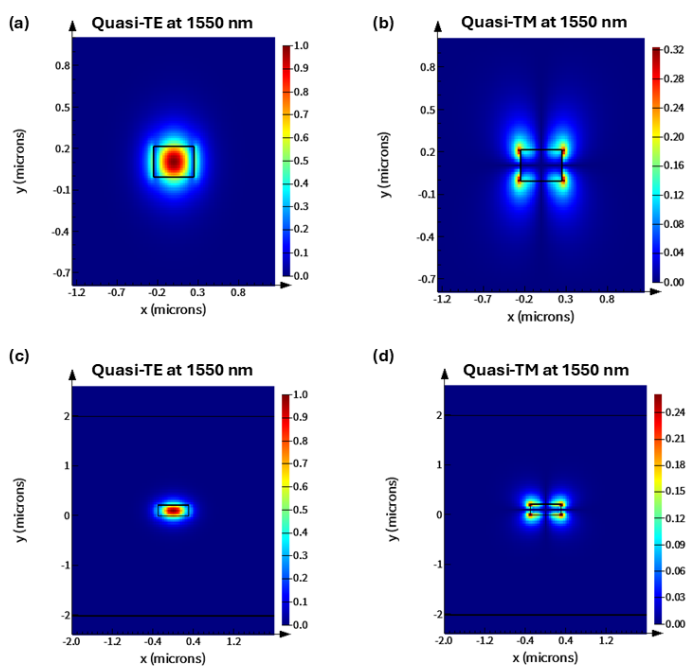

Figure 4. Normalised quasi-TE and quasi-TM profiles at 1550 nm: (a) quasi-TE, 500×220 nm^2; (b) quasi-TM, 500×220 nm^2; (c) quasi-TE, 600×220 nm^2; (d) quasi-TM, 600×220 nm^2.

Two key observations can be made. First, the fundamental quasi-TE mode exhibits strong confinement within the waveguide core in both geometries. Second, increasing the width

from 500 nm to 600 nm results in tighter optical confinement of the quasi-TE mode, as evidenced by the more localised intensity distribution in Figures 3(c) and 4(c). In contrast, the TM and quasi-TM modes display a characteristic dual-lobe field distribution extending beyond the waveguide boundaries, indicating weaker confinement. These profiles confirm the selection of the fundamental quasi-TE mode for all subsequent MZI simulations.

B. Effective Index, Group Index and Dispersion

Figure 5 presents the simulated real and imaginary parts of n_{eff} and the group index n_g over 1500-1600 nm for the fundamental quasi-TE mode of both waveguide geometries.

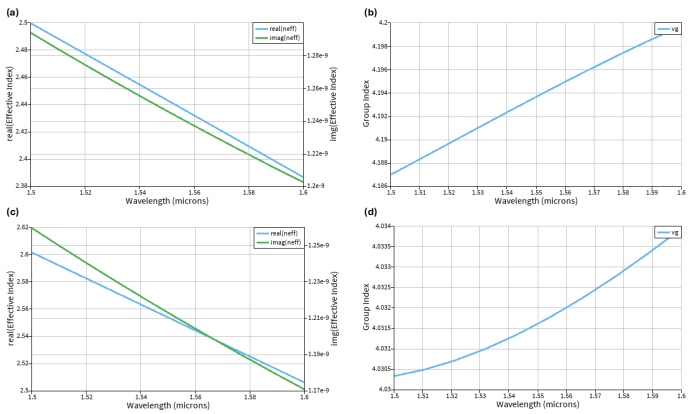

Figure 5. Simulated n_{eff} and n_g versus wavelength: (a) real and imaginary n_{eff}, 500×220 nm^2; (b) n_g, 500×220 nm^2; (c) real and imaginary n_{eff}, 600×220 nm^2; (d) n_g, 600×220 nm^2.

For the 500×220 nm^2 waveguide, the real part of n_{eff} decreases monotonically from 2.50 at 1500 nm to 2.38 at 1600 nm, exhibiting normal dispersion. The group index n_g increases from 4.187 to 4.198 over the same range. For the 600×220 nm^2 waveguide, n_{eff} decreases from 2.60 to 2.50, while n_g ranges from 4.030 to 4.034. In both cases, the imaginary part of n_{eff} remains on the order of 10^{-9}, confirming negligible propagation loss. The higher n_{eff} and lower n_g of the 600 nm waveguide are consistent with its stronger modal confinement, as observed in Section III-A.

C. Compact Waveguide Model

The dispersive behaviour of n_{eff} is approximated using a Taylor expansion centred at λ_0 = 1550 nm:

$$n_{\text{eff}}(\lambda) = n_1 + n_2(\lambda - \lambda_0) + n_3(\lambda - \lambda_0)^2 \tag{10}$$

where n_1 is the effective index at λ_0, n_2 is the first-order dispersion coefficient, and n_3 is the second-order dispersion coefficient. The coefficients are extracted by fitting Equation (10) to the Lumerical MODE data over 1500–1600 nm and are listed in Table I.

Table I
TAYLOR EXPANSION COEFFICIENTS OF $n_{\text{eff}}(\lambda)$ FOR BOTH STRIP WAVEGUIDES. λ_0 = 1550 NM, QUASI-TE MODE.

Width	n_1	n_2 (μm^{-1})	n_3 (μm^{-2})
500 × 220 nm^2	2.443334	−1.129154	−0.041348
600 × 220 nm^2	2.553933	−0.953390	−0.012893

Both fits achieve maximum residuals below 7×10^{-6}, confirming excellent agreement with the simulation data. The coefficient n_1 confirms the higher effective index of the 600 nm waveguide (2.554 vs. 2.443) due to stronger modal confinement. The larger magnitude of n_2 for the 500 nm waveguide reflects its greater wavelength sensitivity, consistent with weaker confinement and larger evanescent field exposure.

D. Thermo-Optic Characterisation

The thermo-optic effect of silicon was characterised by simulating the fundamental quasi-TE mode at two temperature conditions using the FDE solver in Lumerical MODE. The temperature-dependent refractive index is modelled as [4]:

$$n(T) = 3.47 + 1.86 \times 10^{-4} \cdot \Delta T \tag{11}$$

The effective modal thermo-optic coefficient is extracted as:

$$\frac{dn_{\text{eff}}}{dT} = \frac{n_{\text{eff}}(10\,^\circ\text{C}) - n_{\text{eff}}(0\,^\circ\text{C})}{10} \tag{12}$$

Results are summarised in Table II.

Table II
SIMULATED THERMO-OPTIC COEFFICIENTS FOR BOTH STRIP WAVEGUIDES AT $\lambda = 1550$ NM.

Width	n_{eff} (0°C)	n_{eff} (10°C)	$\Delta n_{\text{eff}}/\Delta T$ (K^{-1})
500 × 220 nm^2	2.43748	2.43946	1.978×10^{-4}
600 × 220 nm^2	2.54818	2.55012	1.942×10^{-4}

Both values are in close agreement with the bulk silicon literature value of 1.86×10^{-4} K^{-1}, with deviations of $+6.3\%$ and $+4.4\%$ respectively. These small positive deviations arise because the simulated value includes contributions from the evanescent field overlap with the SiO_2 cladding. The 500×220 nm^2 waveguide exhibits a slightly higher coefficient due to its lower modal confinement.

The temperature rise ΔT_π required to achieve a π phase shift in the heated MZI arm is:

$$\Delta T_\pi = \frac{\lambda}{2 \cdot \frac{dn_{\text{eff}}}{dT} \cdot L_{\text{heater}}} \tag{13}$$

For $L_{\text{heater}} = 100$ μm at $\lambda = 1550$ nm, $\Delta T_\pi \approx 39.2$ K for the 500 nm waveguide and $\Delta T_\pi \approx 39.9$ K for the 600 nm waveguide, both achievable with standard TiN microheaters on the SOI platform.

E. Bend Loss Analysis

The mode overlap between the fundamental quasi-TE mode of the straight and bent waveguide was computed using Lumerical MODE at $\lambda = 1550$ nm. The power transmission through a bend is:

$$T_{\text{bend}} = |\text{overlap}|^2, \quad \text{Loss}\,(\%) = (1 - T_{\text{bend}}) \times 100 \quad (14)$$

A bend loss threshold of 0.1% was adopted as the design criterion. Results are summarised in Table III.

Table III
SIMULATED BEND LOSS FOR BOTH STRIP WAVEGUIDES AT $\lambda = 1550$ NM. DESIGN THRESHOLD: $< 0.1\%$.

Width	Radius (μm)	Power coupling	T_{bend}	(%)
500 nm	5	0.99949	0.99898	0.260
500 nm	8	0.999471	0.998942	0.106
500 nm	8.5	0.999532	0.999064	0.094
600 nm	5	0.996831	0.993676	0.077

For the 500×220 nm^2 waveguide, the 0.1% threshold is exceeded at $R = 5$ μm (0.260%) and $R = 8$ μm (0.106%). A minimum bend radius of $R = 8.5$ μm is therefore required. For the 600×220 nm^2 waveguide, the threshold is met at $R = 5$ μm (0.077%) due to its stronger modal confinement and more localised field distribution. In summary, minimum bend radii of 8.5 μm and 5 μm are adopted for the 500 nm and 600 nm designs respectively.

F. MZI Circuit Simulation: Lumerical INTERCONNECT

The MZI transmission spectra are simulated using Lumerical INTERCONNECT with S-parameter-based component models. The circuit schematic, used for both waveguide geometries, is shown in Figure 6. It consists of two Y-branch splitter/combiner elements (SPAR), two pairs of waveguide segments (WGD) with asymmetric lengths, and an Optical Network Analyzer (ONA). The upper arm has a length of 300 μm with a loss of 0.09 dB/m, while the lower arm has a length of 100 μm with a loss of 0.03 dB/m, giving $\Delta L = 200$ μm.

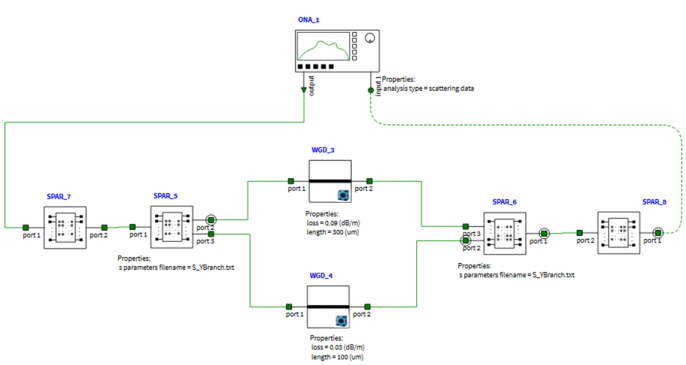

Figure 6. Lumerical INTERCONNECT schematic of the imbalanced MZI ($\Delta L = 200$ μm). Upper arm: 300 μm, 0.09 dB/m. Lower arm: 100 μm, 0.03 dB/m.

For thermal tuning studies, a thermo-optic heater element is incorporated into both arms, as shown in Figure 7. The heater induces a temperature-dependent phase shift that translates the transmission spectrum along the wavelength axis.

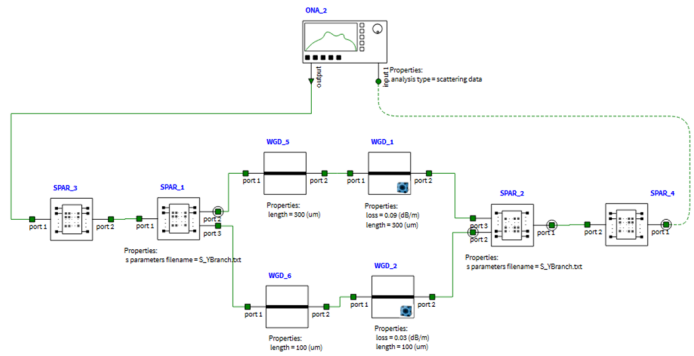

Figure 7. Lumerical INTERCONNECT schematic of the imbalanced MZI with integrated thermo-optic heaters in both arms, used for thermal tuning simulations.

The simulated MZI transmission spectra for the 500×220 nm^2 strip waveguide are evaluated for three configurations: a balanced MZI ($\Delta L = 0$ μm) and two imbalanced cases with $\Delta L = 100$ μm and $\Delta L = 200$ μm. The balanced MZI exhibits a flat transmission response at 0 dB, confirming fully constructive interference at all wavelengths. For the imbalanced cases, periodic transmission dips appear, with the FSR decreasing as ΔL increases. The $\Delta L = 100$ μm case produces a wider FSR with shallower extinction, while $\Delta L = 200$ μm yields a narrower FSR with deeper nulls exceeding -40 dB. The extracted TE FSR ranges from 5.4–6.1 nm ($\Delta L = 100$ μm) and 2.7–3.1 nm ($\Delta L = 200$ μm) over 1500–1600 nm. Thermal tuning at $\Delta L = 200$ μm produces a red-shift of approximately 1 nm per 3°C, while the FSR remains stable. The same trends are observed for the 600×220 nm^2 waveguide, with slightly larger FSR values of 5.6–6.3 nm and 2.8–3.2 nm due to its lower group index. A full quantitative comparison is presented in Section IV.

1) Design Parameter Summary: Table IV summarises all MZI configurations investigated, with the theoretically expected FSR at $\lambda = 1550$ nm and the temperature conditions applied.

Table IV
MZI DESIGN PARAMETER VARIATIONS, EXPECTED FSR AT $\lambda = 1550$ NM, AND THERMAL TUNING CONDITIONS.

Design	Width	Height	ΔL (μm)	FSR (nm)	Temp. (°C)
A1	500 nm	220 nm	0	—	—
A2	500 nm	220 nm	100	5.7	—
A3	500 nm	220 nm	200	2.9	26, 29, 32
A4	600 nm	220 nm	0	—	—
A5	600 nm	220 nm	100	5.9	—
A6	600 nm	220 nm	200	3.0	26, 29, 32

Designs A1 and A4 are balanced reference configurations. Designs A2, A3, A5, and A6 are imbalanced. Thermal tuning is applied to A3 and A6 ($\Delta L = 200$ μm) at three temperatures: 26°C, 29°C, and 32°C, achievable with standard TiN microheaters.

IV. Simulation Results and Discussion

Building on the individual waveguide and circuit simulations described in Section III, this section presents a direct quantitative comparison across all MZI configurations, highlighting the influence of ΔL, waveguide width, temperature, and splitting ratio on the spectral response.

A. Transmission Gain Comparison

Figure 8 presents the MZI transmission spectra over 1540-1560 nm for all four imbalanced configurations: the 500×220 nm^2 and 600×220 nm^2 waveguides, each at $\Delta L = 100$ μm and $\Delta L = 200$ μm.

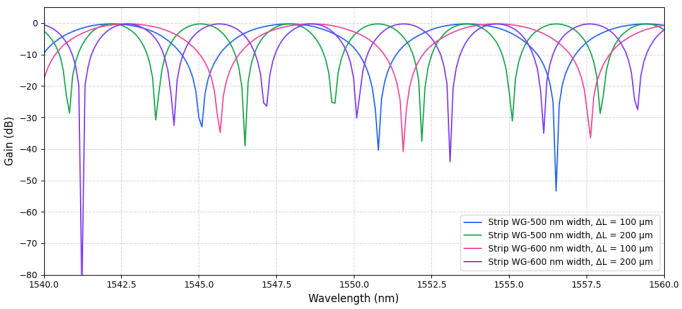

Figure 8. Simulated MZI transmission spectra for the 500×220 nm^2 and 600×220 nm^2 strip waveguides at $\Delta L = 100$ μm and $\Delta L = 200$ μm.

The balanced MZI ($\Delta L = 0$ μm) exhibits a flat transmission response at 0 dB across the entire wavelength range, which indicates that the two arms contribute constructively at all wavelengths. For the imbalanced cases, periodic transmission dips appear due to destructive interference, with the spacing between consecutive minima the free spectral range (FSR) decreasing as ΔL increases. Specifically, the $\Delta L = 100$ μm case produces a wider FSR with shallower extinction, while the $\Delta L = 200$ μm case yields a narrower FSR with deeper and more pronounced transmission nulls, reaching extinction depths beyond -40 dB at certain wavelengths.

The 600×220 nm^2 geometry follows the same qualitative trends as the 500×220 nm^2 case. However, for the same ΔL, the 600 nm waveguide produces a slightly wider FSR, attributable to its lower group index n_g (4.032 vs. 4.194), as predicted by Equation (8). The extinction depth at the transmission nulls varies between configurations due to the wavelength dependence of the propagation constant mismatch.

B. Free Spectral Range (FSR) Comparison

Table V summarises the simulated FSR values at $\lambda = 1550$ nm, and Figure 9 shows the extracted TE FSR as a function of wavelength over 1500–1600 nm for all four configurations.

Table V
Simulated TE FSR at $\lambda = 1550$ nm.

Width	ΔL (μm)	FSR @ 1550 (nm)
500 × 220 nm^2	100	5.7
	200	2.9
600 × 220 nm^2	100	5.9
	200	3.0

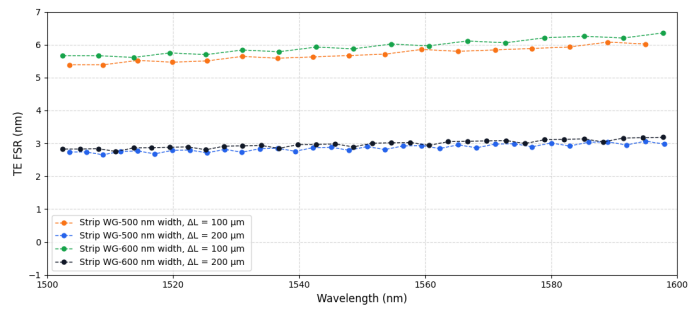

Figure 9. Extracted TE FSR versus wavelength for both strip waveguides at $\Delta L = 100$ μm and $\Delta L = 200$ μm over 1500–1600 nm.

The balanced MZI yields an FSR of 0 nm, consistent with the absence of periodic spectral features. For $\Delta L = 100$ μm, the FSR of the 500 nm waveguide ranges from approximately 5.4 nm to 6.1 nm across the observed wavelength window, exhibiting a slight monotonic increase with wavelength as predicted by Equation (8). For $\Delta L = 200$ μm, the FSR is approximately halved, ranging from 2.7 nm to 3.1 nm, consistent with the inverse proportionality between FSR and ΔL.

For the 600×220 nm^2 waveguide, the wider core results in a slightly larger FSR for the same ΔL, due to its lower group index n_g (4.032 vs. 4.194). For $\Delta L = 100$ μm, the FSR ranges from approximately 5.6 nm to 6.3 nm, while for $\Delta L = 200$ μm it ranges from 2.8 nm to 3.2 nm across the 1500–1600 nm window. In all cases, the FSR increases monotonically with wavelength, consistent with the λ^2 dependence in Equation (8). The consistently larger FSR of the 600 nm waveguide confirms that waveguide width is an effective parameter for tuning the spectral periodicity of the MZI.

C. Thermal Tuning Comparison

Figure 10 presents the thermal tuning response of the imbalanced MZI at $\Delta L = 200$ μm for both waveguide geometries at three operating temperatures: 26°C, 29°C, and 32°C.

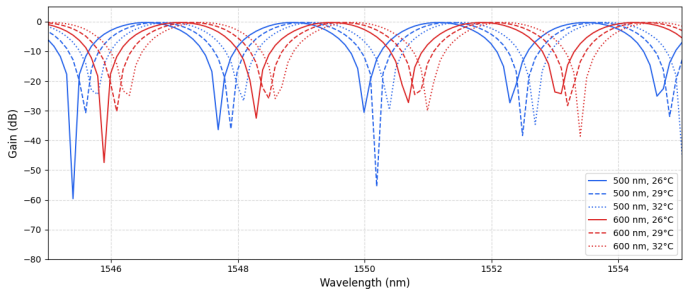

Figure 10. Thermal tuning of the MZI transmission spectrum for the 500×220 nm^2 (blue) and 600×220 nm^2 (red) strip waveguides at $\Delta L = 200$ μm, at 26°C, 29°C, and 32°C.

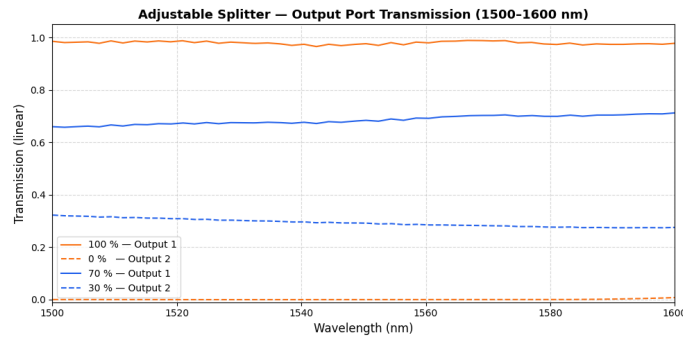

Figure 11. Simulated MZI transmission for splitting ratios of 100-0% and 70-30% at $\Delta L = 200$ μm.

Increasing the operating temperature produces a progressive red-shift of the transmission spectrum in both waveguide geometries, consistent with the positive thermo-optic coefficient of silicon ($dn/dT \approx 1.86 \times 10^{-4}$ K^{-1}). Each 3°C increment shifts the spectral dips toward longer wavelengths, while the FSR and overall spectral shape remain largely unchanged. This confirms that thermal tuning via the thermo-optic effect provides an effective mechanism for wavelength-selective control of the MZI transmission without degrading its spectral periodicity.

A comparison between the two geometries reveals that the 500 nm waveguide exhibits a marginally larger wavelength shift per degree Celsius than the 600 nm waveguide, consistent with its higher simulated modal thermo-optic coefficient (1.978×10^{-4} K^{-1} vs. 1.942×10^{-4} K^{-1}, Table II). For the 600×220 nm^2 waveguide, increasing temperature similarly induces a red-shift, though the magnitude per degree Celsius is marginally smaller, consistent with its lower modal thermo-optic coefficient. In both cases, the FSR remains stable across all temperatures, which verifies that the thermal tuning shifts the operating point of the MZI without altering its fundamental spectral periodicity.

D. Effect of Beam Splitter Coupling Ratio

The effect of the beam splitter coupling ratio is investigated by comparing a 100-0% splitting ratio, in which all power is directed into a single arm, and a 70-30% ratio, representing asymmetric power division. Both conditions are implemented in Lumerical INTERCONNECT by modifying the Y-branch S-parameter file, with all other parameters identical to the imbalanced MZI at $\Delta L = 200$ μm.

Figure 11 presents the simulated MZI transmission for splitting ratios of 100-0% and 70-30% at $\Delta L = 200$ μm.

For the 100-0% splitting ratio, all input power is directed into a single arm, resulting in no interference at the output and a flat transmission response. For the 70-30% ratio, the power imbalance between the two arms reduces the visibility of the interference fringes compared to the ideal 50-50% case. The extinction ratio of the transmission dips decreases, as incomplete destructive interference prevents full cancellation at the output. The FSR, however, remains unchanged, since it is determined solely by ΔL and n_g, both of which are unaffected by the splitting ratio.

E. Group Index Extraction from FSR

Rearranging Equation (8), the group index can be extracted directly from the measured or simulated FSR as:

$$n_g(\lambda) = \frac{\lambda^2}{\mathrm{FSR}(\lambda) \cdot \Delta L} \tag{15}$$

where λ, FSR, and ΔL are all expressed in micrometres. Table VI compares the extracted n_g values against the directly simulated values at $\lambda = 1550$ nm for both waveguide geometries.

Table VI
GROUP INDEX EXTRACTED FROM SIMULATED FSR AT $\lambda = 1550$ NM, COMPARED TO DIRECTLY SIMULATED n_g.

Width	ΔL (μm)	n_g extracted	n_g simulated
500 × 220 nm^2	100	4.2149	4.1942
	200	4.1422	
600 × 220 nm^2	100	4.0720	4.0318
	200	4.0042	

The simulated n_g values of 4.1942 and 4.0318 represent the group index computed directly from the Lumerical MODE frequency sweep at $\lambda = 1550$ nm, and are common to both ΔL cases for each waveguide width, since n_g is a property of the waveguide geometry alone and is independent of the MZI arm length difference.

All extracted values agree with the directly simulated n_g to within 1.3%, verifying that Equation (15) provides a reliable and experimentally accessible route to characterizing n_g directly from the transmission spectrum without requiring a direct mode simulation. In the experimental phase, this procedure will be applied to measured MZI spectra to extract n_g and compare against these simulation predictions.

V. Layout

The physical layout of the MZI designs was implemented using KLayout with the SiEPIC EBeam Process Design Kit (PDK). The layout was designed exclusively for the 500×220 nm^2 strip waveguide geometry. The adjustable splitter configurations investigated in the INTERCONNECT simulations were not included in the fabrication layout, as the focus was placed on characterising the fundamental MZI behaviour across balanced and imbalanced configurations.

A. Layout Overview

The complete layout contains eight photonic structures, arranged in a single row with a grating coupler pitch of 127 μm and a minimum spacing of 60 μm between adjacent structures. The eight structures are described as follows:

- **MZI 1:** Balanced MZI ($\Delta L = 0$ μm), serving as the reference structure.
- **MZI 2:** Imbalanced MZI with $\Delta L = 100$ μm.
- **MZI 3:** Imbalanced MZI with $\Delta L = 200$ μm.
- **MZI 4–6:** Duplicate copies of MZI 1, MZI 2, and MZI 3, respectively, included to assess fabrication repeatability and manufacturing variability across identical designs.
- **Structure 7:** A U-loop reference structure consisting of two grating couplers connected by a continuous strip waveguide. This structure serves as a reference for characterising the insertion loss and spectral response of the grating couplers independently of the MZI.
- **Structure 8:** An asymmetric Y-branch structure in which two grating couplers are connected via a Y-junction and a strip waveguide, forming a configuration analogous to an imbalanced MZI. This structure allows characterisation of the Y-branch splitting behaviour and its contribution to the overall MZI response.

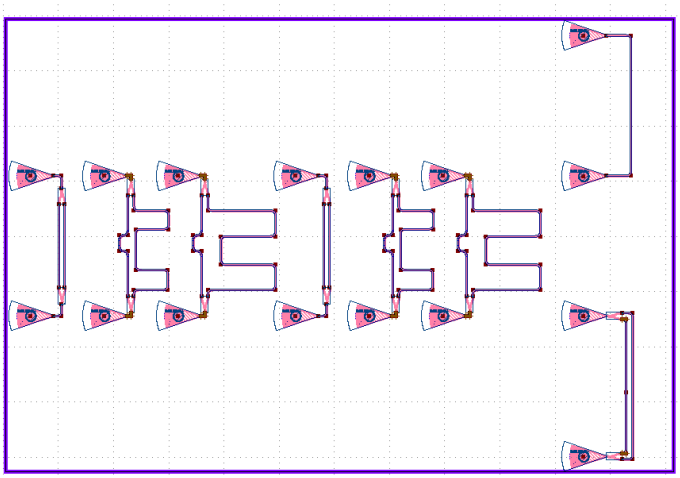

Figure 12. KLayout view of the complete fabrication layout containing eight photonic structures: three MZI designs (balanced and two imbalanced configurations), three duplicate copies for repeatability testing, a U-loop grating coupler reference, and an asymmetric Y-branch structure. Grating coupler pitch: 127 μm. Minimum structure spacing: 60 μm.

B. Port Labelling and Input Convention

All input ports in the layout follow the SiEPIC EBeam naming convention:

`opt_in_TE_1550_device_harithak_YOURDEVICE`

where `harithak` identifies the designer and `YOURDEVICE` is replaced by the specific structure identifier for each design (e.g., `MZI1`, `MZI2`, `MZI3`). This labelling format is required by the SiEPIC automated measurement system to correctly identify and route the optical probe to each input port during automated testing.

C. Circuit Simulation Verification

Prior to submitting the layout for fabrication, circuit-level simulations were performed on each MZI structure directly within the layout environment to verify the expected interferometric behaviour. A continuous-wave laser source was placed at the input port, and individual photodetectors were connected to each output port. The simulated transmission spectra were extracted and compared against the reference INTERCONNECT simulations presented in Section III.

The circuit simulation results for all three MZI configurations : balanced ($\Delta L = 0$ μm), imbalanced ($\Delta L = 100$ μm), and imbalanced ($\Delta L = 200$ μm), were found to be in close agreement with the expected behaviour, confirming the correctness of the waveguide routing, arm length differences, and Y-branch connections implemented in the layout.

D. Design Rule Check and Coordinate Extraction

Following the circuit simulations, two automated verification steps were performed:

1) **Automated Coordinate Extraction:** The port labels of all eight structures were automatically extracted and verified against the expected naming convention. All labels were correctly detected, confirming that the measurement system will be able to identify and address each input port during automated probing.
2) **Design Rule Check (DRC):** A full DRC was executed to identify any layout violations, including minimum spacing, minimum width, and waveguide bend radius constraints. No errors were detected, confirming that the layout is compliant with the SiEPIC EBeam fabrication design rules.

The layout is therefore ready for submission to the SiEPIC EBeam fabrication process.

VI. Fabrication

To be completed following device fabrication and experimental characterization on the SiEPIC EBeam platform.

VII. Experiment Data

To be completed following device fabrication and experimental characterization on the SiEPIC EBeam platform.

VIII. Analysis

To be completed following experimental data collection.

IX. Conclusion

To be completed following experimental results and analysis.

References

[1] W. Bogaerts et al., "Silicon microring resonators", *Laser & Photonics Reviews*, vol. 6, no. 1, pp. 47–73, 2012. DOI: 10.1002/lpor.201100012.

[2] G. T. Reed, G. Mashanovich, F. Y. Gardes, and D. J. Thomson, "Silicon optical modulators", *Nature Photonics*, vol. 4, pp. 518–526, 2010. DOI: 10.1038/nphoton.2010.179.

[3] L. Chrostowski and M. Hochberg, *Silicon Photonics Design: From Devices to Systems*. Cambridge University Press, 2015, ch. 12.

[4] G. Cocorullo and I. Rendina, "Thermo-optical modulation at 1.5 μm in silicon etalon", *Electronics Letters*, vol. 28, no. 1, pp. 83–85, 1992. DOI: 10.1049/el:19920051.