NXZBN and NXZHBN Series Automatic Transfer Switching Equipment (Class CB, Class PC)

NXZBN-63S/2B

NXZBN-63S/4B

NXZBN-63S/4D

1. Scope of Application

- The 2P products of NXZBN and NXZHBN series automatic transfer switching equipment are suitable for connecting one or several load circuits from one power supply to another in the AC 50Hz/60Hz, two-phase two-wire dual-circuit power supply system with rated voltage 230V/240V and below and rated current up to 63A.
- The 4P products of NXZBN and NXZHBN are suitable for connecting one or several load circuits from one power supply to another in the AC 50Hz/60Hz, three-phase four-wire dual-circuit power supply system with rated voltage 230V/240V, 400V/415V and below and rated current up to 63A, so as to ensure the normal power supply of the load circuits.
- This series products are suitable for industrial, commercial, high-rise and residential building areas.

2. Compliance Standards

- Product standards
  IEC 60947-1, GB/T 14048.1
  IEC 60947-6-1, GB/T 14048.11
- Product certification
  CCC, CE, CB

3. Working Conditions

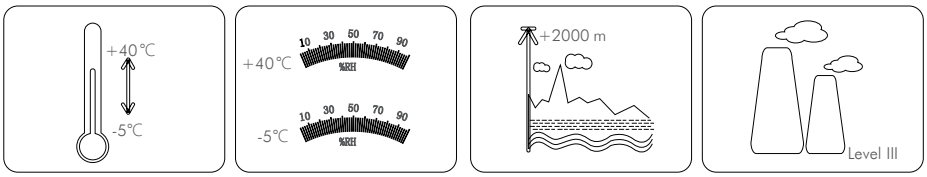

- Ambient temperature: -5°C～+40°C. If it needs to work at -25°C～+70°C, please customize related products and use them according to the temperature derating table with NXB miniature circuit breaker.
- Altitude: no more than 2000m; if it needs to work over 2000m, it needs to be used according to the altitude derating table with NXB miniature circuit breaker (Class CB products)
- Atmospheric conditions: the relative humidity shall not exceed 50% when the ambient air temperature is +40°C; there can be higher relative humidity at lower temperature;the monthly average maximum relative humidity of the wettest month is 90% and the monthly average minimum temperature of this month is +20°C. Special measures should be taken for the occasional condensation caused by temperature changes.
- Pollution level: Level 3
- Installation category
  - The installation category of main circuit switching equipment is Class IV.
  - The installation category of auxiliary circuit is Class III.
- Utilisation category
  - NXZBN-63: AC-33B
  - NXZHBN-63: AC-33B
- Electromagnetic compatibility (EMC)
  - Electrostatic discharge (IEC 61000-4-2) Level 2, GB/T 17626.2 Level 2
  - Radio frequency electromagnetic field – radiation immunity (IEC 61000-4-3) Level 3, GB/T 17626.3 Level 3
  - Radio frequency electromagnetic field – Conduction immunity (IEC 61000-4-6) Level 3, GB/T 17626.6 Level 3
  - Electrical fast transient/burst (IEC 61000-4-4) Level 3, GB/T 17626.4 Level 3
  - Surge impact (IEC 61000-4-5) Level 3, GB/T 17626.5 Level 3
  - Harmonic (IEC 61000-4-13) Level 3, GB/T 17626.13 Level 3
  - Voltage sag and short-time interruption (IEC 61000-4-11) Class 3, GB/T 17626.11 Class 2
  - Radiated emission (CISPR 11) Class B Group 1, GB 4824 Class B - Group 1
  - Conducted emission (CISPR 11) Class B Group 1, GB 4824 Class B - Group 1

4. Features

- **Small size**—brand-new 2P design, smaller size, greatly reducing the customer's cabinet space;
- **Modular**—Modular design is adopted and the controller can be replaced on site, which is convenient for customers to maintain and upgrade;
- **Convenient and reliable**—hidden sampling line design, pre-connected inside, easy for wiring;
- **Multifunctional**—basic/standard/advanced controllers can be selected to meet the diverse needs of customers;
- **Four modes**—in the modes of auto-transfer and auto-recovery, auto-transfer and non-auto-recovery, and mutual backup, a new test mode is added to facilitate commissioning;
- **Lockable Pad**—the whole system comes standard with padlock function to ensure the safety of users during maintenance and repair;
- **Visual window**—product opening and closing state is visible;
- **Safety upgrade**—the cover and base are all plastic, which is safer and more reliable;
- **Remote control conversion**—Mod-bus communication function is enhanced to support reading and writing of more data and remote control function (one out of two) is added;
- **Support customization**—Support customization of products with switching action time within 1s, three-phase 230V power supply system or neutral line loss alarm function, etc.

5. Model Selection

NXZBN-63 Automatic Transfer Switching Equipment (Class CB)

NXZBN	–	63	H	/	4	D	T	C	63
Product code		Frame current code	Breaking capacity code		Pole number code	Controller code	Function code	Trip curve type	Rated current code
NXZBN Series Automatic Transfer Switching Equipment (Class CB)		63A	S: 9.18kA H: 17kA		2: two poles 3: three poles 4: four poles	A: Basic type B: Standard type D: Intelligent type E: 3-phase 230/240V type	Blank: None T: Communication function Y: Remote manipulation	C: C Curve D: D Curve	10A, 16A, 20A, 25A, 32A, 40A, 50A, 63A

Selection example:

NXZBN-63H/4DT C63: Order a Class CB automatic transfer switching equipment with 63A frame current, 17kA breaking capacity, 4P poles, intelligent controller (Type D) with communication function, Type C trip curve and 63A rated current.

Note 1: 3P products are common with 4P products. When ordering 3P products, you need to place an order for 4P model (AC230V working voltage is required in cabinets and boxes) and the function codes of Type A and Type B controllers are blank by default.

Note 2: If it is used for 3-phase 230V/240V voltage in special occasions, please note "Type E controller" when placing an order.

Note 3: When the frame current code is 63A and the conversion time needs to be less than 1s. Please note "fast motor" when placing an order.

Note 4: If the D/E controller of CB products is required to have trip alarm function, please note "with trip alarm function" when placing an order.

NXZHBN-63 Automatic Transfer Switching Equipment (Class PC)

NXZHBN	–	63	/	4	D	T	63
Product code		Frame current code		Pole number code	Controller code	Function code	Rated current code
NXZHBN Series Automatic Transfer Switching Equipment (Class PC)		63A		2: two poles 3: three poles 4: four poles	A: Basic type B: Standard type D: Intelligent type E: 3-phase 230/240V type	Blank: None T: Communication function Y: Remote manipulation	10A, 16A, 20A, 25A, 32A, 40A, 50A,63A

Selection example:

NXZHBN-63/4DT 63: Order a Class PC automatic transfer switching equipment with 63A frame current, 4P poles, intelligent controller (Type D) with communication function and 63A rated current.

Note 1: 3P products are common with 4P products. When ordering 3P products, you need to place an order for 4P model (AC230V working voltage is required in cabinets and boxes) and the function codes of Type A and Type B controllers are blank by default.

Note 2: If it is used for 3-phase 230/240V voltage in special occasions, please note "Type E controller" when placing an order.

Note 3: When the frame current code is 63A and the conversion time needs to be less than 1s. Please note "fast motor" when placing an order.

6. Technical Data

Table of Main Technical Data for NXZBN-63 Automatic Transfer Switching Equipment (Class CB)

Model	**NXZBN-63S**	**NXZBN-63H**
Electrical Characteristics		
Body	NXB-63	NXB-63H
frame current (A)	63	63
Rated working current Ie (A)	10, 16, 20, 25, 32, 40, 50, 63	10, 16, 20, 25, 32, 40, 50, 63
Rated working voltage Ue (V)	AC400V/AC415V, 50Hz/60Hz (2P product AC230V/AC240V, 50Hz/60Hz)	
Rated impulse withstand voltage Uimp (kV)	4	4
Rated insulation voltage Ui (V)	500	500
Utilisation category	AC-33B	AC-33B
Number of poles	2P, 3P, 4P	2P, 3P, 4P
Rated short circuit making capacity Icm (kA)	9.18	17
Rated short circuit breaking capacity Icn (kA)	6	10
Trip curve type	C, D	C, D
Mechanical durability (times)	10000	10000
Electrical durability (times)	3000	3000
Controller Characteristics		
Controller model	A: Basic type B: Standard type D: Intelligent type	
Contact conversion time (s)	≤ 0.9	
Conversion action time (s)	≤ 1.5	
Controller installation mode	Integrated	
Rated impulse withstand voltage Uimp (kV)	2.5	
Rated control power supply voltage Us (V)	AC230V/240V, 50Hz/60Hz	

Table of Main Technical Data for NXZHBN-63 Automatic Transfer Switching Equipment (Class PC)

Model	**NXZHBN-63**
Electrical Characteristics	
frame current (A)	63
Rated working current Ie (A)	10, 16, 20, 25, 32, 40, 50, 63
Rated working voltage Ue (V)	AC400V/AC415V, 50Hz/60Hz (2P product AC230V/AC240V, 50Hz/60Hz)
Rated impulse withstand voltage Uimp (kV)	4
Rated insulation voltage Ui (V)	690
Utilisation category	AC-33B
Number of poles	2P, 3P, 4P
Rated limiting short circuit current Iq (kA)	100
Mechanical durability (times)	10000
Electrical durability (times)	1500
Controller Characteristics	
Controller model	A: Basic type B: Standard type D: Intelligent type
Contact conversion time (s)	≤ 0.9
Conversion action time (s)	≤ 1.5
Controller installation mode	Integrated
Rated impulse withstand voltage Uimp (kV)	2.5
Rated control power supply voltage Us (V)	AC230V/240V, 50Hz/60Hz

7. Functions and Characteristics

Table of Main Functions for NXZBN/NXZHBN Controller

Model / Function	Type A (Basic)	Type B (Standard)	Type D (Intelligent)
Manual and automatic switching mode	■	■	■
Mode selection (Mode1～Mode4)	-	-	■
Working position of main contact			
Power supply I	■	■	■
Power supply II	■	■	■
Double-off power failure	■	■	■
Automatic control			
Monitor power supply I	■ Phase loss/voltage loss, undervoltage and overvoltage fault	■ Phase loss/voltage loss, undervoltage and overvoltage fault	■ Phase loss/voltage loss, undervoltage and overvoltage fault
Monitor power supply II	-	-	■ Phase loss/voltage loss, undervoltage and overvoltage fault
Auto-transfer and auto-recovery (Mode1)	■	■	■
Auto-transfer and non-auto-recovery (Mode2)	-	-	■
Mutual backup (Mode3)	-	-	■
Test mode (Mode4)	-	-	■
Phase loss and voltage loss conversion	■	■	■
Undervoltage conversion ①	■ Only power supply I (184V by default, nonadjustable, recovery value 199V)	■ Only power supply I (184V by default, nonadjustable, recovery value 199V)	■ 184V by default, which is not adjustable, and the recovery value is 199V
Overvoltage conversion ①	■ Only power supply I (276V by default, nonadjustable, recovery value 261V)	■ Only power supply I (276V by default, nonadjustable, recovery value 261V)	■ 276V by default, which is not adjustable, and the recovery value is 261V
Conversion delay	-	-	■ 5s by default, 0s～30s adjustable, step 5s
Return delay	-	-	■ 5s by default, 0s～30s adjustable, step 5s
Generator function	-	■	■
Generator start-stop delay	-	-	■ (30s nonadjustable)
Fire fighting linkage	-	■	■ (Long beep of buzzer)
Fire fighting feedback	-	-	■
Indication			
On, off	■	■	■
Indication of power supply I and power supply II	■	■	■
Fire fighting status	-	-	■
Conversion timeout indication	-	-	■
Overload and short circuit trip indication (only Class CB)	-	-	□
Alarm			
Conversion timeout alarm	-	-	■ (Short beep of buzzer)
Overload and short circuit trip alarm (Class CB only)	-	-	□ (Short beep of buzzer)
Others			
Remote operation conversion function	-	-	□
Communication function (RS485)	-	-	□

Note: ■ stands for standard, □ stands for optional, - indicates that there is no such function;

① Over-and under-voltage conversion accuracy: ±5%.

8. Operation and Installation Instructions

Introduction of buttons and indicator lights of NXZBN and NXZHBN controllers

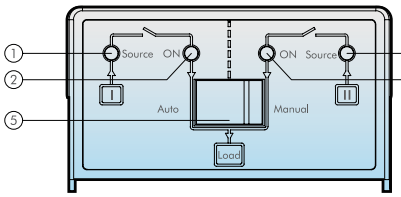

1. Power supply I (red)
2. Power supply I on (green)
3. Power supply II (red)
4. Power supply II on (green)
5. Auto/manual

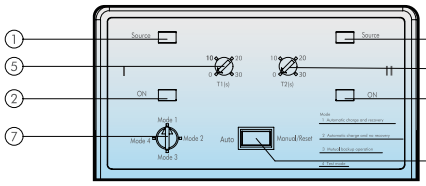

1. Power supply I (red)
2. Power supply I on (green)
3. Power supply II (red)
4. Power supply II on (green)
5. Conversion delay time (Power supply I to power supply II)
6. Return delay time (Power supply II to power supply I)
7. Conversion mode
8. Auto/manual changeover

Indicator Information				
Product status	①	②	③	④
Power supply I normal	Normally on			
Power supply I on		Normally on		
Power supply II normal			Normally on	
Power supply II on				Normally on

Indicator Information				
Product status	①	②	③	④
Power supply I normal	Normally on			
Power supply I on		Normally on		
Power supply II normal			Normally on	
Power supply II on				Normally on
Conversion delay				Flash on
Return delay		Flash on		
Power supply I trip	Flash on	Flash on		
Power supply II trip			Flash on	Flash on
Product conversion fault	Flash on		Flash on	
Fire fighting linkage		Flash on		Flash on

Padlock function

During wiring maintenance or troubleshooting, first put the product in manual position, double side off, and then pull out the limiter in the handle and lock it. Lock hole is Φ5.

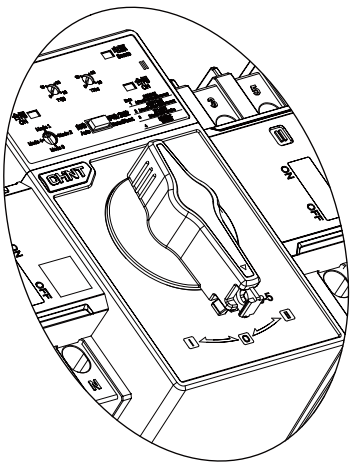

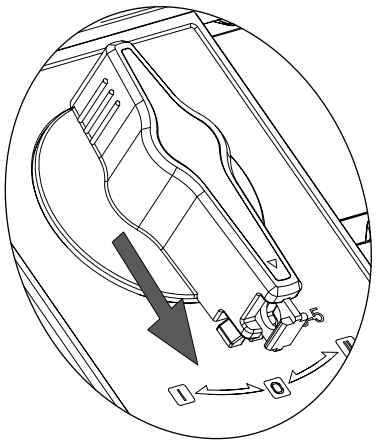

Action Flow Chart of NXZBN and NXZHBN Controllers

Auto-transfer and auto-recovery working mode	Auto-transfer and auto-recovery (generator) working mode

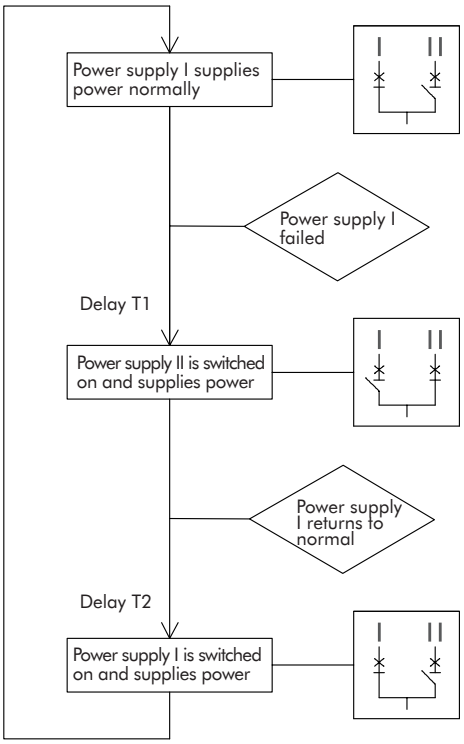

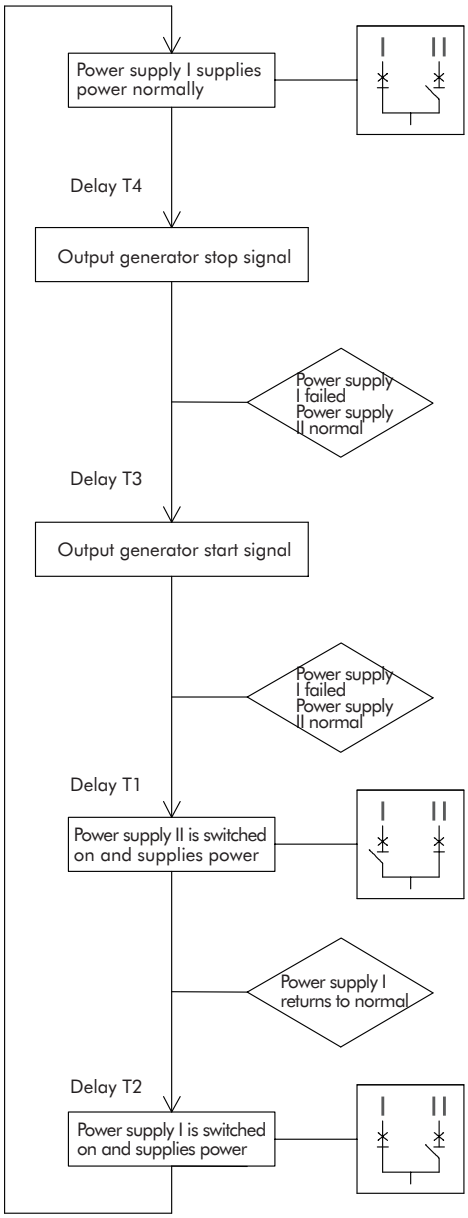

Auto-transfer and non-auto-recovery (generator) working mode

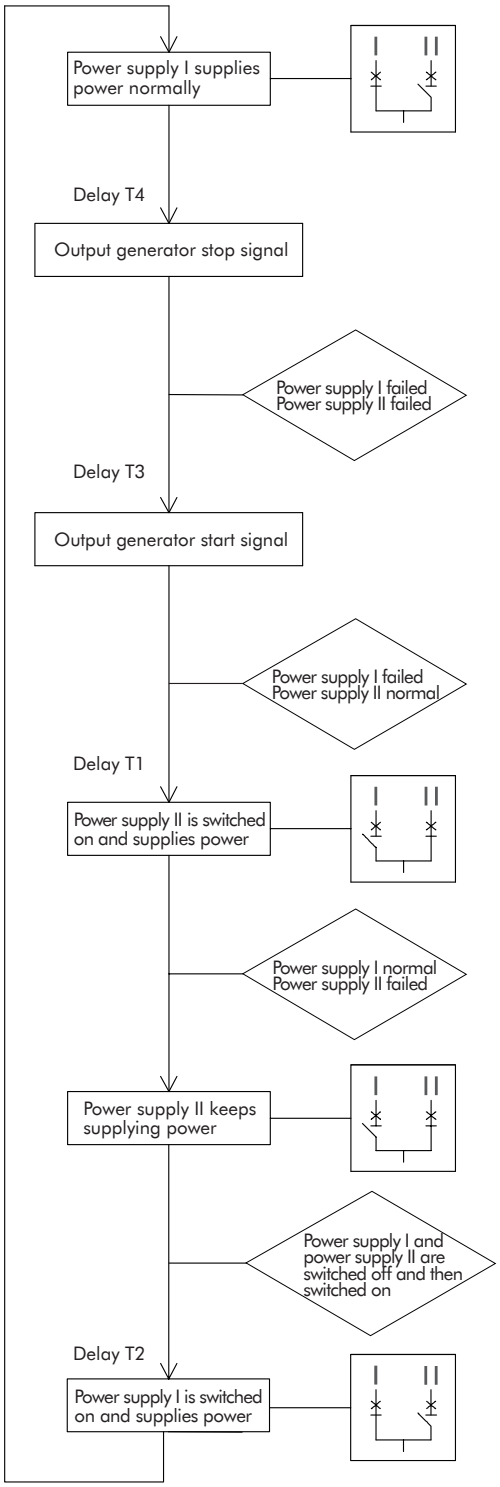

Mutual backup (generator) working mode

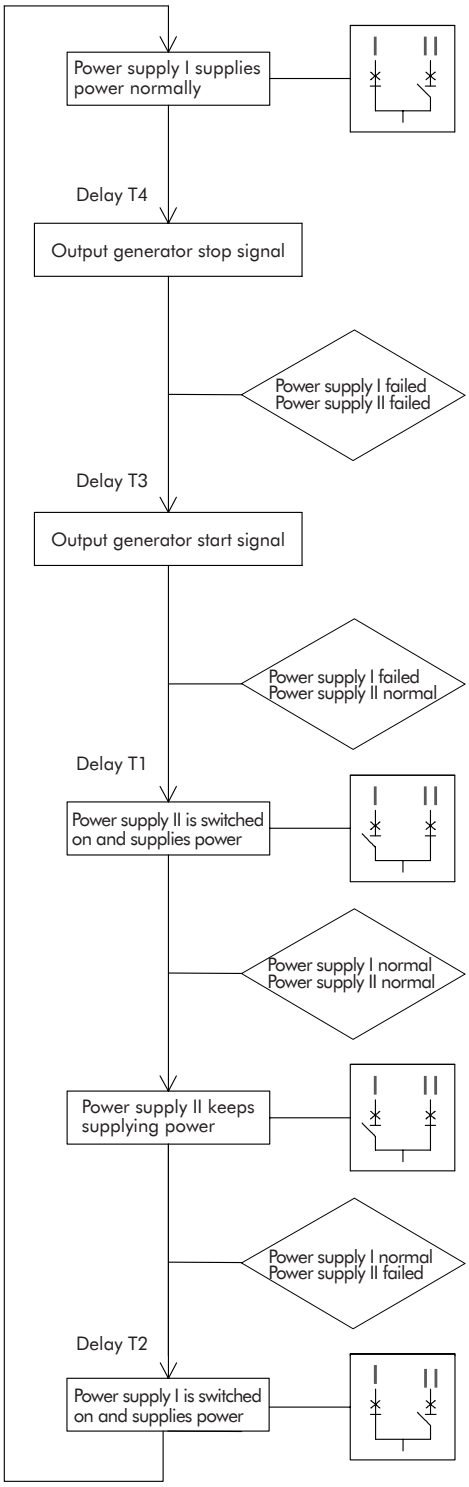

Notes:

1. Type A controller only has "auto-transfer and auto-recovery" working mode and T1 and T2 are 0s.
2. Type B controller only has "auto-transfer and auto-recovery (generator)" working mode and T1, T2, T3 and T4 are 0s.
3. Type D controller has the working modes of "auto-transfer and auto-recovery (generator)", "auto-transfer and non-auto-recovery (generator)" and "mutual backup (generator)" and the values of T1 and T2 can be adjusted from 0s to 30s (step 5s) while the values of T3 and T4 are fixed for 30s.

9. Wiring between the Body and Controller

Body Connection of NXZBN and NXZHBN Series Products

Schematic Diagram of Product Connection

4P product connection diagram

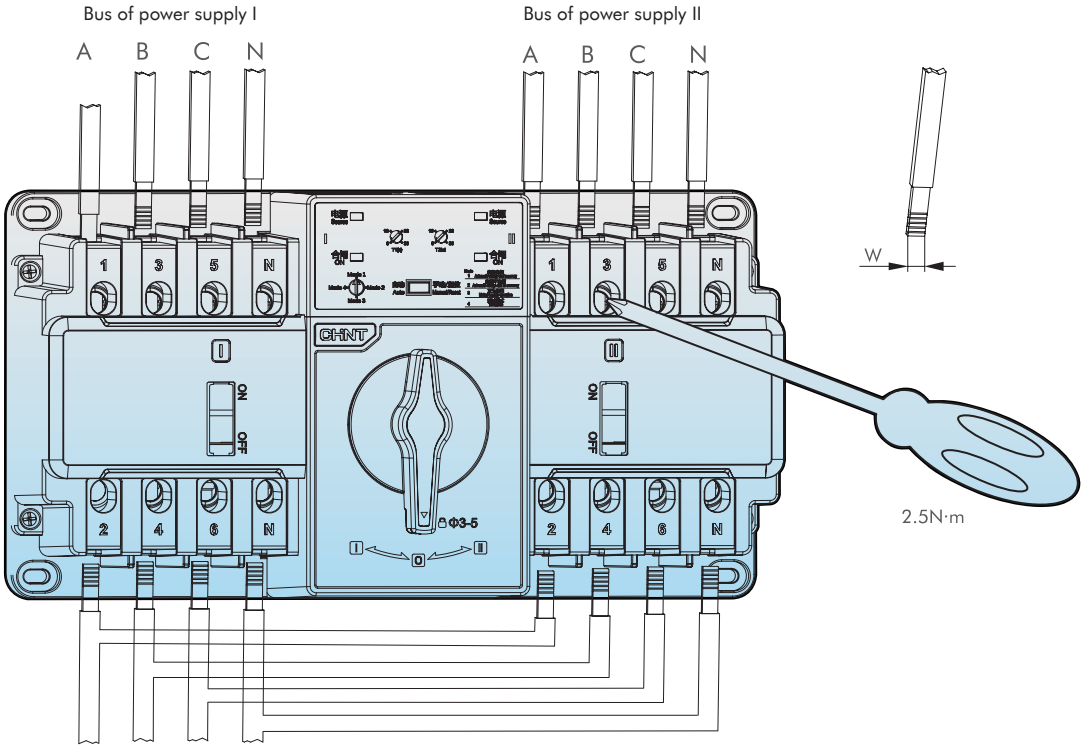

3P product connection diagram

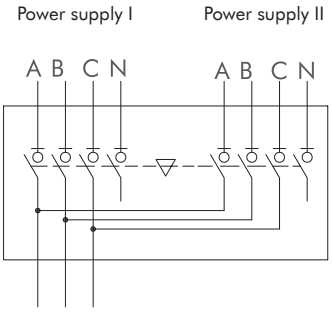

Type A and Type B Controllers

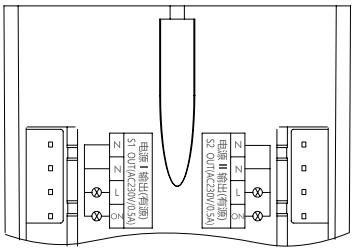

Notes:
1. The N line of 3P products (Type A and Type B controllers) can be connected to the incoming end or the external terminal of the controller.
2. When power supply I and power supply II are two independent power supplies, any form of electrical connection between any terminals (including N phase) is strictly prohibited, otherwise the controller will be burned out (if the power supply is the same, there can be electrical connection).

2P product connection diagram

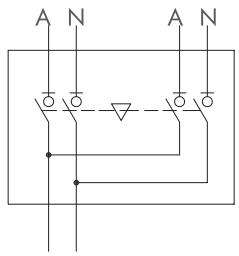

Notes: 1. The wiring of the product is top in and bottom out and it can be installed vertically or horizontally.
2. The phase sequence of the power supply must be consistent, especially the N pole must not be wrong.
3. Single-core polyvinyl chloride (PVC) insulated conductor or equivalent copper bar shall be used as the connecting conductor (the length of the insulation layer shall be peeled off for 9mm≤L<15mm when the conductor is connected).

Safe carrying capacity (A)	10	16/20	25	32	40/50	63
Cross-sectional area of copper conductor (mm2)	1.5	2.5	4	6	10	16
Copper bar width W (mm)	≤ 6					
Number of connecting conductors	1					

Connection of Signal and Control Terminals of NXZBN/NXZHBN Series Products

Schematic Diagram of Product Connection

Type A and Type B

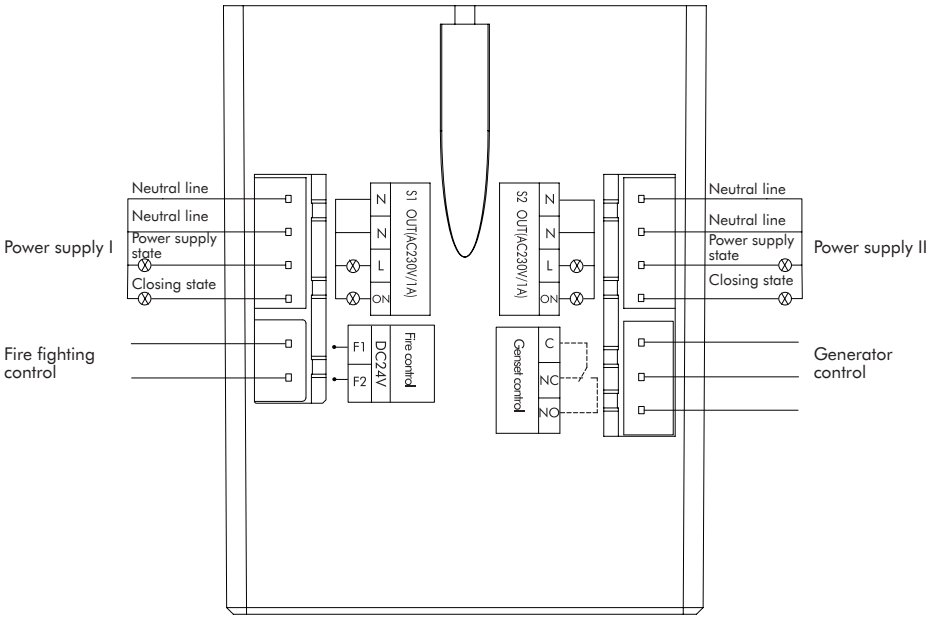

Notes:
1. The closing signal is active output and the contact capacity is AC230V/1A; It is forbidden to connect external power supply, otherwise the controller will be burned out.
2. Type A controller has no generator control and fire fighting functions.
3. Type B controller has generator control and fire fighting functions.
The generator control signal is passive output and the contact capacity is 230V/1A;
When power supply I is normal, C and NO are connected;
When power supply I fails, C and NC are connected.
4. The fire-fighting function is only applicable to automatic mode and the fire-fighting input power is 1.5W.
DC24V continuous signal (no direction requirement) is input and it automatically switches back to the main circuit after the signal disappears.
5. Type A and type B controller, external terminal, indicator signal and breaker state output signal are invalid in manual mode.

Type D

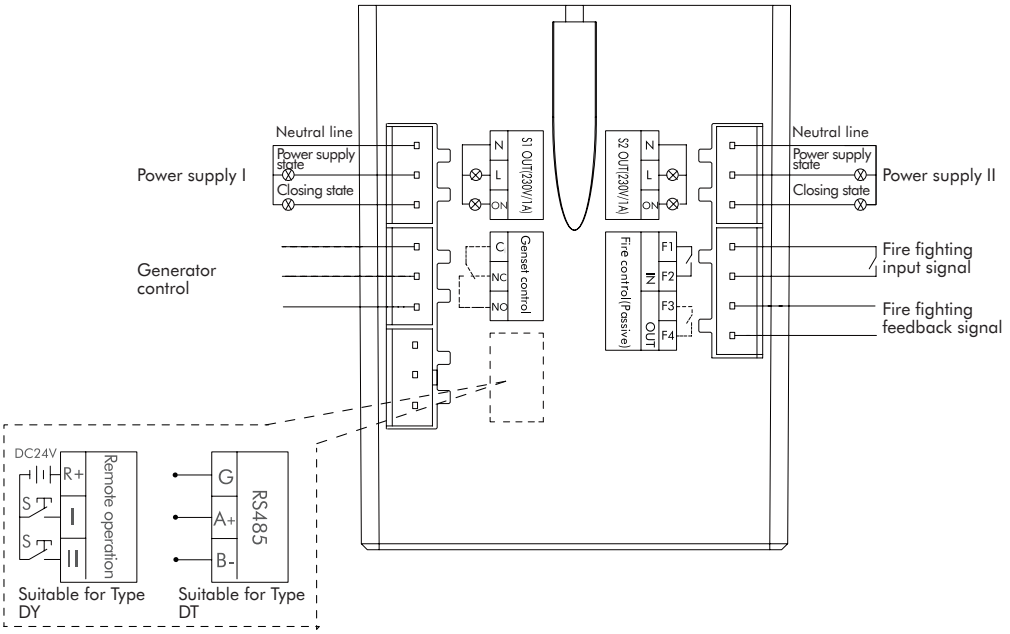

Notes:
1. The closing signal is active output and the contact capacity is AC230V/1A; It is forbidden to connect external power supply, otherwise the controller will be burned out.
2. The generator control signal is passive output
When power supply I is normal and switched on, C and NO are connected;
When power supply I and power supply II both fail, C and NC are connected.
3. Fire fighting input is passive signal; F3 and F4 are connected through after fire fighting double-off, and output is passive signal and the contact capacity is all AC230V/0.2A;
In automatic mode, after the fire fighting signal is cancelled, the controller knob is pushed to "manual" to return to normal;
In manual mode, after the fire fighting signal is cancelled, the controller knob is pushed to "automatic" and then pushed back to "manual" to return to normal.
4. Type D controller can be equipped with communication function or remote operation function as option.
5. Some controller models can be specially customized, see the selection guide for details.

10. Outline and Installation Dimensions

Outline and Installation Dimensions of NXZBN and NXZHBN (the dimensions of 3P products are the same as those of 4P products)

Outline and Installation Dimensions of 3P/4P — Unit: mm

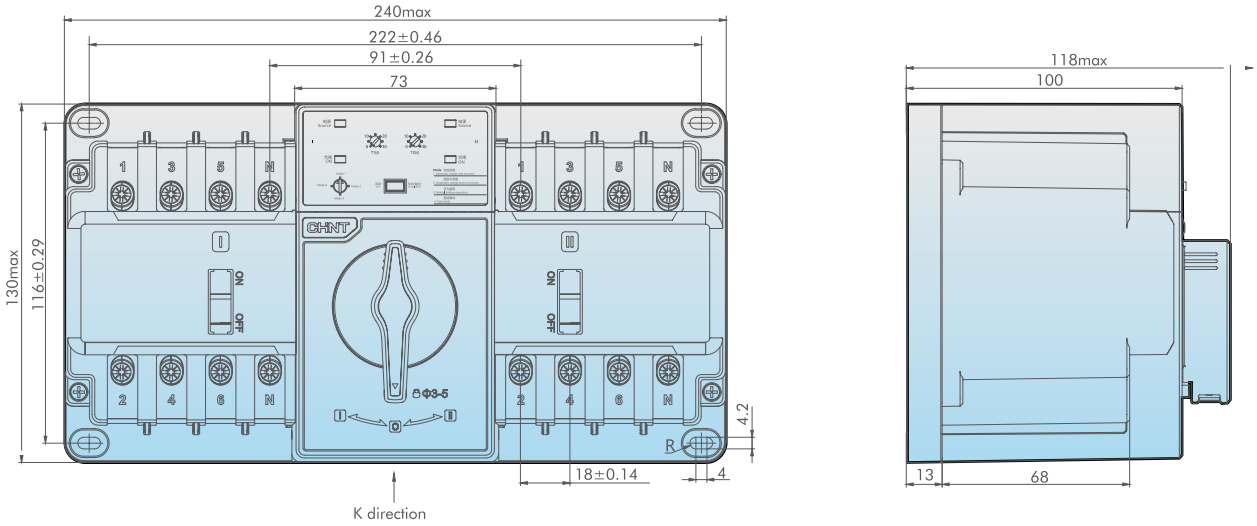

Partial View of K direction — Unit: mm

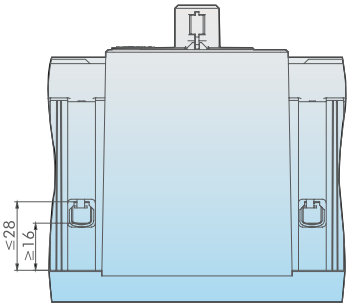

Outline and Installation Dimensions of NXZBN and NXZHBN

Outline and Installation Dimensions of 2P — Unit: mm

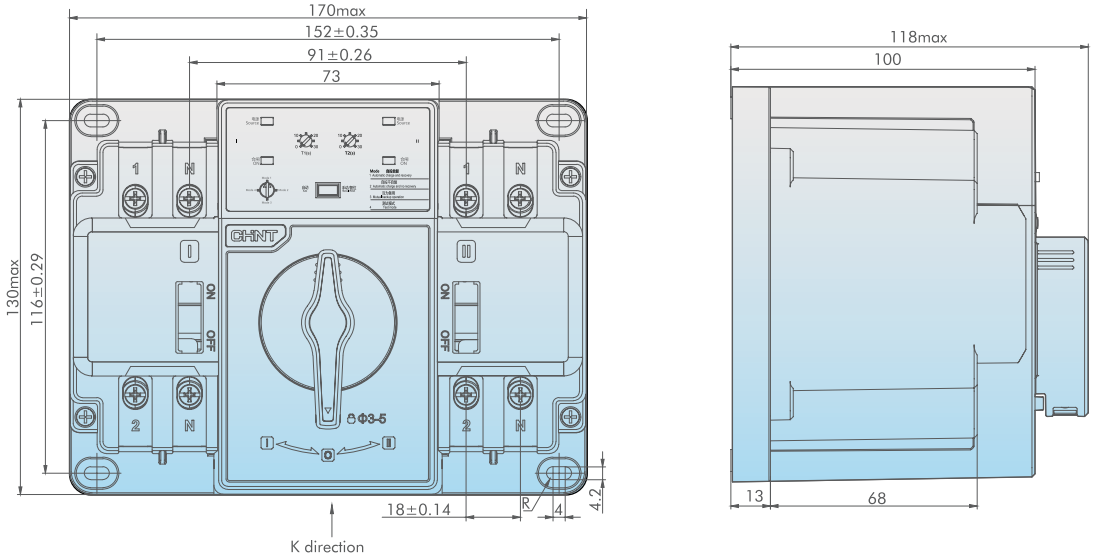

Partial View of K direction — Unit: mm

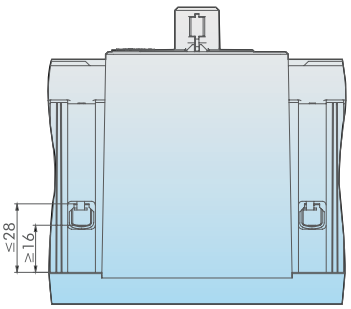

11. NXZBN SKU List

NXZBN-63 Automatic Transfer Switching Equipment (Class CB)

NXZBN	–	63	H	/	4	D	T	C	63
Product code		Frame current code	Breaking capacity code		Pole number code	Controller code	Function code	Trip curve type	Rated current code
NXZBN Series Automatic Transfer Switching Equipment (Class CB)		63A	S: 9.18kA H: 17kA		2: two poles 3: three poles 4: four poles	A: Basic type B: Standard type D: Intelligent type E: 3-phase 230/240V type	Blank: None T: Communication function Y: Remote manipulation	C: C Curve D: D Curve	10A, 16A, 20A, 25A, 32A, 40A, 50A, 63A

Poles	Rated Current(A)	Description	Order Code
2P	10	NXZBN-63H/2A C10	604203
	16	NXZBN-63H/2A C16	604204
	20	NXZBN-63H/2A C20	604205
	25	NXZBN-63H/2A C25	604206
	32	NXZBN-63H/2A C32	604207
	40	NXZBN-63H/2A C40	604208
	50	NXZBN-63H/2A C50	604209
	63	NXZBN-63H/2A C63	604210
	10	NXZBN-63H/2A D10	604211
	16	NXZBN-63H/2A D16	604212
	20	NXZBN-63H/2A D20	604214
	25	NXZBN-63H/2A D25	604213
	32	NXZBN-63H/2A D32	604215
	40	NXZBN-63H/2A D40	604216
	50	NXZBN-63H/2A D50	604217
	63	NXZBN-63H/2A D63	604218
	10	NXZBN-63H/2B C10	604219
	16	NXZBN-63H/2B C16	604220
	20	NXZBN-63H/2B C20	604221
	25	NXZBN-63H/2B C25	604222
	32	NXZBN-63H/2B C32	604223
	40	NXZBN-63H/2B C40	604224
	50	NXZBN-63H/2B C50	604225
	63	NXZBN-63H/2B C63	604226
	10	NXZBN-63H/2B D10	604227
	16	NXZBN-63H/2B D16	604228
	20	NXZBN-63H/2B D20	604229
	25	NXZBN-63H/2B D25	604230
	32	NXZBN-63H/2B D32	604231
	40	NXZBN-63H/2B D40	604232

Poles	Rated Current(A)	Description	Order Code
	50	NXZBN-63H/2B D50	604234
	63	NXZBN-63H/2B D63	604233
	10	NXZBN-63H/2D C10	604235
	16	NXZBN-63H/2D C16	604236
	20	NXZBN-63H/2D C20	604237
	25	NXZBN-63H/2D C25	604238
	32	NXZBN-63H/2D C32	604239
	40	NXZBN-63H/2D C40	604240
	50	NXZBN-63H/2D C50	604241
	63	NXZBN-63H/2D C63	604242
	10	NXZBN-63H/2D D10	604243
	16	NXZBN-63H/2D D16	604244
	20	NXZBN-63H/2D D20	604245
	25	NXZBN-63H/2D D25	604247
	32	NXZBN-63H/2D D32	604246
	40	NXZBN-63H/2D D40	604248
	50	NXZBN-63H/2D D50	604249
	63	NXZBN-63H/2D D63	604250
	10	NXZBN-63H/2DT C10	604251
	16	NXZBN-63H/2DT C16	604252
	20	NXZBN-63H/2DT C20	604253
	25	NXZBN-63H/2DT C25	604254
2P	32	NXZBN-63H/2DT C32	604255
	40	NXZBN-63H/2DT C40	604256
	50	NXZBN-63H/2DT C50	604257
	63	NXZBN-63H/2DT C63	604258
	10	NXZBN-63H/2DT D10	604259
	16	NXZBN-63H/2DT D16	604260
	20	NXZBN-63H/2DT D20	604261
	25	NXZBN-63H/2DT D25	604262
	32	NXZBN-63H/2DT D32	604263
	40	NXZBN-63H/2DT D40	604264
	50	NXZBN-63H/2DT D50	604265
	63	NXZBN-63H/2DT D63	604266
	10	NXZBN-63H/2DY C10	604267
	16	NXZBN-63H/2DY C16	604268
	20	NXZBN-63H/2DY C20	604269
	25	NXZBN-63H/2DY C25	604270
	32	NXZBN-63H/2DY C32	604271
	40	NXZBN-63H/2DY C40	604272
	50	NXZBN-63H/2DY C50	604273
	63	NXZBN-63H/2DY C63	604275
	10	NXZBN-63H/2DY D10	604274
	16	NXZBN-63H/2DY D16	604276

Poles	Rated Current(A)	Description	Order Code
2P	20	NXZBN-63H/2DY D20	604277
	25	NXZBN-63H/2DY D25	604279
	32	NXZBN-63H/2DY D32	604278
	40	NXZBN-63H/2DY D40	604280
	50	NXZBN-63H/2DY D50	604281
	63	NXZBN-63H/2DY D63	604282
4P	20	NXZBN-63H/4A C20	604283
	25	NXZBN-63H/4A C25	604284
	32	NXZBN-63H/4A C32	604285
	40	NXZBN-63H/4A C40	604286
	50	NXZBN-63H/4A C50	604287
	63	NXZBN-63H/4A C63	604288
	16	NXZBN-63H/4A D16	604289
	20	NXZBN-63H/4A D20	604290
	25	NXZBN-63H/4A D25	604291
	32	NXZBN-63H/4A D32	604292
	40	NXZBN-63H/4A D40	604293
	50	NXZBN-63H/4A D50	604294
	63	NXZBN-63H/4A D63	604295
	20	NXZBN-63H/4B C20	604296
	25	NXZBN-63H/4B C25	604297
	32	NXZBN-63H/4B C32	604298
	40	NXZBN-63H/4B C40	604299
	50	NXZBN-63H/4B C50	604300
	63	NXZBN-63H/4B C63	604301
	16	NXZBN-63H/4B D16	604302
	20	NXZBN-63H/4B D20	604303
	25	NXZBN-63H/4B D25	604304
	32	NXZBN-63H/4B D32	604305
	40	NXZBN-63H/4B D40	604306
	50	NXZBN-63H/4B D50	604307
	63	NXZBN-63H/4B D63	604308
	20	NXZBN-63H/4D C20	604309
	25	NXZBN-63H/4D C25	604311
	32	NXZBN-63H/4D C32	604310
	40	NXZBN-63H/4D C40	604312
	50	NXZBN-63H/4D C50	604313
	63	NXZBN-63H/4D C63	604314
	16	NXZBN-63H/4D D16	604315
	20	NXZBN-63H/4D D20	604316
	25	NXZBN-63H/4D D25	604317
	32	NXZBN-63H/4D D32	604318
	40	NXZBN-63H/4D D40	604319
	50	NXZBN-63H/4D D50	604320

Poles	Rated Current(A)	Description	Order Code
	63	NXZBN-63H/4D D63	604321
	20	NXZBN-63H/4DT C20	604322
	25	NXZBN-63H/4DT C25	604323
	32	NXZBN-63H/4DT C32	604324
	40	NXZBN-63H/4DT C40	604325
	50	NXZBN-63H/4DT C50	604326
	63	NXZBN-63H/4DT C63	604327
	16	NXZBN-63H/4DT D16	604328
	20	NXZBN-63H/4DT D20	604330
	25	NXZBN-63H/4DT D25	604329
	32	NXZBN-63H/4DT D32	604332
	40	NXZBN-63H/4DT D40	604331
	50	NXZBN-63H/4DT D50	604333
	63	NXZBN-63H/4DT D63	604334
	20	NXZBN-63H/4DY C20	604335
	25	NXZBN-63H/4DY C25	604336
	32	NXZBN-63H/4DY C32	604337
	40	NXZBN-63H/4DY C40	604338
	50	NXZBN-63H/4DY C50	604339
	63	NXZBN-63H/4DY C63	604340
	16	NXZBN-63H/4DY D16	604341
	20	NXZBN-63H/4DY D20	604342
4P	25	NXZBN-63H/4DY D25	604343
	32	NXZBN-63H/4DY D32	604344
	40	NXZBN-63H/4DY D40	604345
	50	NXZBN-63H/4DY D50	604346
	63	NXZBN-63H/4DY D63	604347
	20	NXZBN-63H/4E C20	604508
	25	NXZBN-63H/4E C25	604509
	32	NXZBN-63H/4E C32	604510
	40	NXZBN-63H/4E C40	604511
	50	NXZBN-63H/4E C50	604512
	63	NXZBN-63H/4E C63	604513
	16	NXZBN-63H/4E D16	604514
	20	NXZBN-63H/4E D20	604515
	25	NXZBN-63H/4E D25	604516
	32	NXZBN-63H/4E D32	604517
	40	NXZBN-63H/4E D40	604519
	50	NXZBN-63H/4E D50	604518
	63	NXZBN-63H/4E D63	604520
	20	NXZBN-63H/4ET C20	604521
	25	NXZBN-63H/4ET C25	604522
	32	NXZBN-63H/4ET C32	604523
	40	NXZBN-63H/4ET C40	604524

Poles	Rated Current(A)	Description	Order Code
4P	50	NXZBN-63H/4ET C50	604525
	63	NXZBN-63H/4ET C63	604526
	16	NXZBN-63H/4ET D16	604527
	20	NXZBN-63H/4ET D20	604528
	25	NXZBN-63H/4ET D25	604529
	32	NXZBN-63H/4ET D32	604530
	40	NXZBN-63H/4ET D40	604531
	50	NXZBN-63H/4ET D50	604532
	63	NXZBN-63H/4ET D63	604533
	20	NXZBN-63H/4EY C20	604534
	25	NXZBN-63H/4EY C25	604535
	32	NXZBN-63H/4EY C32	604536
	40	NXZBN-63H/4EY C40	604537
	50	NXZBN-63H/4EY C50	604538
	63	NXZBN-63H/4EY C63	604539
	16	NXZBN-63H/4EY D16	604540
	20	NXZBN-63H/4EY D20	604541
	25	NXZBN-63H/4EY D25	604542
	32	NXZBN-63H/4EY D32	604543
	40	NXZBN-63H/4EY D40	604544
	50	NXZBN-63H/4EY D50	604545
	63	NXZBN-63H/4EY D63	604546
2P	10	NXZBN-63S/2A C10	604348
	16	NXZBN-63S/2A C16	604350
	20	NXZBN-63S/2A C20	604349
	25	NXZBN-63S/2A C25	604351
	32	NXZBN-63S/2A C32	604352
	40	NXZBN-63S/2A C40	604354
	50	NXZBN-63S/2A C50	604353
	63	NXZBN-63S/2A C63	604355
	10	NXZBN-63S/2A D10	604356
	16	NXZBN-63S/2A D16	604358
	20	NXZBN-63S/2A D20	604357
	25	NXZBN-63S/2A D25	604359
	32	NXZBN-63S/2A D32	604360
	40	NXZBN-63S/2A D40	604361
	50	NXZBN-63S/2A D50	604362
	63	NXZBN-63S/2A D63	604363
	10	NXZBN-63S/2B C10	604364
	16	NXZBN-63S/2B C16	604365
	20	NXZBN-63S/2B C20	604366
	25	NXZBN-63S/2B C25	604367
	32	NXZBN-63S/2B C32	604368
	40	NXZBN-63S/2B C40	604369

Poles	Rated Current(A)	Description	Order Code
2P	50	NXZBN-63S/2B C50	604370
	63	NXZBN-63S/2B C63	604372
	10	NXZBN-63S/2B D10	604371
	16	NXZBN-63S/2B D16	604373
	20	NXZBN-63S/2B D20	604375
	25	NXZBN-63S/2B D25	604374
	32	NXZBN-63S/2B D32	604376
	40	NXZBN-63S/2B D40	604377
	50	NXZBN-63S/2B D50	604378
	63	NXZBN-63S/2B D63	604379
	10	NXZBN-63S/2D C10	604381
	16	NXZBN-63S/2D C16	604380
	20	NXZBN-63S/2D C20	604382
	25	NXZBN-63S/2D C25	604383
	32	NXZBN-63S/2D C32	604385
	40	NXZBN-63S/2D C40	604384
	50	NXZBN-63S/2D C50	604386
	63	NXZBN-63S/2D C63	604388
	10	NXZBN-63S/2D D10	604387
	16	NXZBN-63S/2D D16	604389
	20	NXZBN-63S/2D D20	604390
	25	NXZBN-63S/2D D25	604391
	32	NXZBN-63S/2D D32	604392
	40	NXZBN-63S/2D D40	604393
	50	NXZBN-63S/2D D50	604394
	63	NXZBN-63S/2D D63	604395
	10	NXZBN-63S/2DT C10	604397
	16	NXZBN-63S/2DT C16	604396
	20	NXZBN-63S/2DT C20	604398
	25	NXZBN-63S/2DT C25	604399
	32	NXZBN-63S/2DT C32	604400
	40	NXZBN-63S/2DT C40	604401
	50	NXZBN-63S/2DT C50	604402
	63	NXZBN-63S/2DT C63	604403
	10	NXZBN-63S/2DT D10	604404
	16	NXZBN-63S/2DT D16	604405
	20	NXZBN-63S/2DT D20	604406
	25	NXZBN-63S/2DT D25	604407
	32	NXZBN-63S/2DT D32	604408
	40	NXZBN-63S/2DT D40	604409
	50	NXZBN-63S/2DT D50	604410
	63	NXZBN-63S/2DT D63	604411
	10	NXZBN-63S/2DY C10	604412
	16	NXZBN-63S/2DY C16	604413

Poles	Rated Current(A)	Description	Order Code
2P	20	NXZBN-63S/2DY C20	604414
	25	NXZBN-63S/2DY C25	604416
	32	NXZBN-63S/2DY C32	604415
	40	NXZBN-63S/2DY C40	604417
	50	NXZBN-63S/2DY C50	604418
	63	NXZBN-63S/2DY C63	604419
	10	NXZBN-63S/2DY D10	604420
	16	NXZBN-63S/2DY D16	604421
	20	NXZBN-63S/2DY D20	604422
	25	NXZBN-63S/2DY D25	604423
	32	NXZBN-63S/2DY D32	604424
	40	NXZBN-63S/2DY D40	604425
	50	NXZBN-63S/2DY D50	604426
	63	NXZBN-63S/2DY D63	604427
4P	10	NXZBN-63S/4A C10	604428
	16	NXZBN-63S/4A C16	604429
	20	NXZBN-63S/4A C20	604430
	25	NXZBN-63S/4A C25	604431
	32	NXZBN-63S/4A C32	604432
	40	NXZBN-63S/4A C40	604433
	50	NXZBN-63S/4A C50	604434
	63	NXZBN-63S/4A C63	604435
	10	NXZBN-63S/4A D10	604436
	16	NXZBN-63S/4A D16	604437
	20	NXZBN-63S/4A D20	604438
	25	NXZBN-63S/4A D25	604439
	32	NXZBN-63S/4A D32	604440
	40	NXZBN-63S/4A D40	604441
	50	NXZBN-63S/4A D50	604442
	63	NXZBN-63S/4A D63	604443
	10	NXZBN-63S/4B C10	604444
	16	NXZBN-63S/4B C16	604445
	20	NXZBN-63S/4B C20	604446
	25	NXZBN-63S/4B C25	604447
	32	NXZBN-63S/4B C32	604448
	40	NXZBN-63S/4B C40	604449
	50	NXZBN-63S/4B C50	604450
	63	NXZBN-63S/4B C63	604451
	10	NXZBN-63S/4B D10	604452
	16	NXZBN-63S/4B D16	604453
	20	NXZBN-63S/4B D20	604454
	25	NXZBN-63S/4B D25	604455
	32	NXZBN-63S/4B D32	604456
	40	NXZBN-63S/4B D40	604457

Poles	Rated Current(A)	Description	Order Code
	50	NXZBN-63S/4B D50	604458
	63	NXZBN-63S/4B D63	604460
	10	NXZBN-63S/4D C10	604459
	16	NXZBN-63S/4D C16	604461
	20	NXZBN-63S/4D C20	604462
	25	NXZBN-63S/4D C25	604463
	32	NXZBN-63S/4D C32	604464
	40	NXZBN-63S/4D C40	604465
	50	NXZBN-63S/4D C50	604466
	63	NXZBN-63S/4D C63	604467
	10	NXZBN-63S/4D D10	604468
	16	NXZBN-63S/4D D16	604469
	20	NXZBN-63S/4D D20	604470
	25	NXZBN-63S/4D D25	604471
	32	NXZBN-63S/4D D32	604472
	40	NXZBN-63S/4D D40	604473
	50	NXZBN-63S/4D D50	604474
	63	NXZBN-63S/4D D63	604476
	10	NXZBN-63S/4DT C10	604475
	16	NXZBN-63S/4DT C16	604477
	20	NXZBN-63S/4DT C20	604478
	25	NXZBN-63S/4DT C25	604479
4P	32	NXZBN-63S/4DT C32	604480
	40	NXZBN-63S/4DT C40	604481
	50	NXZBN-63S/4DT C50	604482
	63	NXZBN-63S/4DT C63	604483
	10	NXZBN-63S/4DT D10	604485
	16	NXZBN-63S/4DT D16	604484
	20	NXZBN-63S/4DT D20	604486
	25	NXZBN-63S/4DT D25	604487
	32	NXZBN-63S/4DT D32	604488
	40	NXZBN-63S/4DT D40	604489
	50	NXZBN-63S/4DT D50	604490
	63	NXZBN-63S/4DT D63	604491
	10	NXZBN-63S/4DY C10	604492
	16	NXZBN-63S/4DY C16	604493
	20	NXZBN-63S/4DY C20	604494
	25	NXZBN-63S/4DY C25	604495
	32	NXZBN-63S/4DY C32	604496
	40	NXZBN-63S/4DY C40	604497
	50	NXZBN-63S/4DY C50	604498
	63	NXZBN-63S/4DY C63	604499
	10	NXZBN-63S/4DY D10	604500
	16	NXZBN-63S/4DY D16	604501

Poles	Rated Current(A)	Description	Order Code
	20	NXZBN-63S/4DY D20	604502
	25	NXZBN-63S/4DY D25	604503
	32	NXZBN-63S/4DY D32	604504
	40	NXZBN-63S/4DY D40	604505
	50	NXZBN-63S/4DY D50	604506
	63	NXZBN-63S/4DY D63	604507
	20	NXZBN-63S/4E C20	604547
	25	NXZBN-63S/4E C25	604548
	32	NXZBN-63S/4E C32	604549
	40	NXZBN-63S/4E C40	604550
	50	NXZBN-63S/4E C50	604551
	63	NXZBN-63S/4E C63	604552
	16	NXZBN-63S/4E D16	604553
	20	NXZBN-63S/4E D20	604554
	25	NXZBN-63S/4E D25	604555
	32	NXZBN-63S/4E D32	604556
	40	NXZBN-63S/4E D40	604557
	50	NXZBN-63S/4E D50	604558
	63	NXZBN-63S/4E D63	604559
	20	NXZBN-63S/4ET C20	604560
	25	NXZBN-63S/4ET C25	604561
	32	NXZBN-63S/4ET C32	604562
	40	NXZBN-63S/4ET C40	604563
	50	NXZBN-63S/4ET C50	604564
	63	NXZBN-63S/4ET C63	604565
	16	NXZBN-63S/4ET D16	604566
	20	NXZBN-63S/4ET D20	604567
	25	NXZBN-63S/4ET D25	604568
	32	NXZBN-63S/4ET D32	604569
	40	NXZBN-63S/4ET D40	604570
	50	NXZBN-63S/4ET D50	604571
	63	NXZBN-63S/4ET D63	604572
	20	NXZBN-63S/4EY C20	604574
	25	NXZBN-63S/4EY C25	604573
	32	NXZBN-63S/4EY C32	604575
	40	NXZBN-63S/4EY C40	604577
	50	NXZBN-63S/4EY C50	604576
	63	NXZBN-63S/4EY C63	604578
	16	NXZBN-63S/4EY D16	604579
	20	NXZBN-63S/4EY D20	604580
	25	NXZBN-63S/4EY D25	604581
	32	NXZBN-63S/4EY D32	604583
	40	NXZBN-63S/4EY D40	604582
	50	NXZBN-63S/4EY D50	604584
	63	NXZBN-63S/4EY D63	604585

12. NXZHBN SKU List

NXZHBN-63 Automatic Transfer Switching Equipment (Class PC)

NXZHBN	–	63	/	4	D	T	63
Product code		Frame current code		Pole number code	Controller code	Function code	Rated current code
NXZHBN Series Automatic Transfer Switching Equipment (Class PC)		63A		2: two poles 3: three poles 4: four poles	A: Basic type B: Standard type D: Intelligent type E: 3-phase 230/240V type	Blank: None T: Communication function Y: Remote manipulation	10A, 16A, 20A, 25A, 32A, 40A, 50A,63A

Poles	Rated Current(A)	Description	Order Code
4P	10	NXZHBN-63/4A 10	604139
	16	NXZHBN-63/4A 16	604140
	20	NXZHBN-63/4A 20	604142
	25	NXZHBN-63/4A 25	604141
	32	NXZHBN-63/4A 32	604143
	40	NXZHBN-63/4A 40	604144
	50	NXZHBN-63/4A 50	604145
	63	NXZHBN-63/4A 63	604146
	10	NXZHBN-63/4B 10	604148
	16	NXZHBN-63/4B 16	604147
	20	NXZHBN-63/4B 20	604149
	25	NXZHBN-63/4B 25	604151
	32	NXZHBN-63/4B 32	604150
	40	NXZHBN-63/4B 40	604153
	50	NXZHBN-63/4B 50	604152
	63	NXZHBN-63/4B 63	604154
	10	NXZHBN-63/4D 10	604156
	16	NXZHBN-63/4D 16	604155
	20	NXZHBN-63/4D 20	604157
	25	NXZHBN-63/4D 25	604158
	32	NXZHBN-63/4D 32	604159
	40	NXZHBN-63/4D 40	604160
	50	NXZHBN-63/4D 50	604161
	63	NXZHBN-63/4D 63	604162
	10	NXZHBN-63/4DT 10	604163
	16	NXZHBN-63/4DT 16	604166
	20	NXZHBN-63/4DT 20	604165
	25	NXZHBN-63/4DT 25	604164
	32	NXZHBN-63/4DT 32	604167
	40	NXZHBN-63/4DT 40	604168

Poles	Rated Current(A)	Description	Order Code
4P	50	NXZHBN-63/4DT 50	604170
	63	NXZHBN-63/4DT 63	604169
	10	NXZHBN-63/4DY 10	604171
	16	NXZHBN-63/4DY 16	604173
	20	NXZHBN-63/4DY 20	604172
	25	NXZHBN-63/4DY 25	604175
	32	NXZHBN-63/4DY 32	604174
	40	NXZHBN-63/4DY 40	604176
	50	NXZHBN-63/4DY 50	604177
	63	NXZHBN-63/4DY 63	604178
	10	NXZHBN-63/4E 10	604181
	16	NXZHBN-63/4E 16	604179
	20	NXZHBN-63/4E 20	604180
	25	NXZHBN-63/4E 25	604182
	32	NXZHBN-63/4E 32	604184
	40	NXZHBN-63/4E 40	604183
	50	NXZHBN-63/4E 50	604185
	63	NXZHBN-63/4E 63	604186
	10	NXZHBN-63/4ET 10	604195
	16	NXZHBN-63/4ET 16	604196
	20	NXZHBN-63/4ET 20	604197
	25	NXZHBN-63/4ET 25	604198
	32	NXZHBN-63/4ET 32	604199
	40	NXZHBN-63/4ET 40	604200
	50	NXZHBN-63/4ET 50	604201
	63	NXZHBN-63/4ET 63	604202
	10	NXZHBN-63/4EY 10	604187
	16	NXZHBN-63/4EY 16	604188
	20	NXZHBN-63/4EY 20	604189
	25	NXZHBN-63/4EY 25	604190
	32	NXZHBN-63/4EY 32	604192
	40	NXZHBN-63/4EY 40	604191
	50	NXZHBN-63/4EY 50	604193
	63	NXZHBN-63/4EY 63	604194