# Template Week 2 – Logic

Student number: 585361 (Thije Hulshof)

**Assignment 2.1: Parking lot**

Which gates do you need?

Een AND-gate

Complete this table

| Parking lot 1 | Parking lot 2 | Parking lot 3 | Result (full) |
|---|---|---|---|
| 0 | 0 | 0 | 0 |
| 0 | 0 | 1 | 0 |
| 0 | 1 | 0 | 0 |
| 1 | 0 | 0 | 0 |
| 1 | 1 | 0 | 0 |
| 1 | 0 | 1 | 0 |
| 0 | 1 | 1 | 0 |
| 1 | 1 | 1 | 1 |

**Assignment 2.2: Android or iPhone**

Which gates do you need?

XOR

Complete this table

| Android phone | iPhone | Result (Phone in possession) |
|---|---|---|
| 0 | 0 | 0 |
| 1 | 0 | 1 |
| 0 | 1 | 1 |
| 1 | 1 | 0 |

**Assignment 2.3: Four NAND gates**

Complete this table

| A | B | Q |
|---|---|---|
| 0 | 0 | 0 |
| 1 | 1 | 0 |
| 1 | 0 | 1 |
| 0 | 1 | 1 |

How can the design be simplified?

XOR

**Assignment 2.4: Getting to know Logisim evolution**

Screenshot of the design with your name and student number in it:

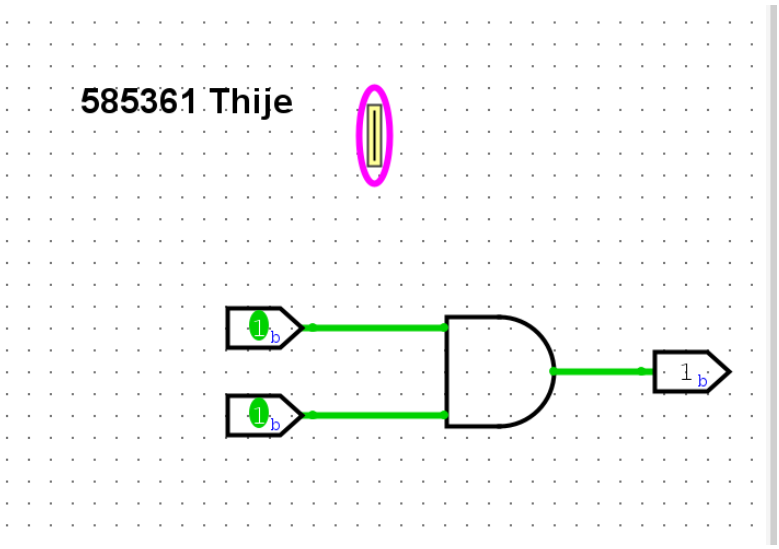

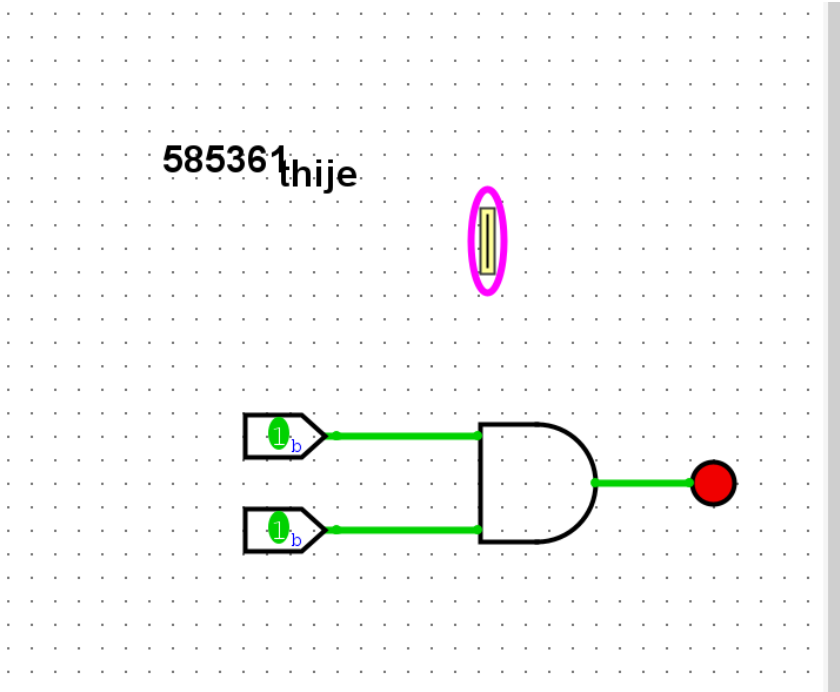


**Assignment 2.5: SR Latch**

Screenshot SR Latch in Logisim with your name and student number:

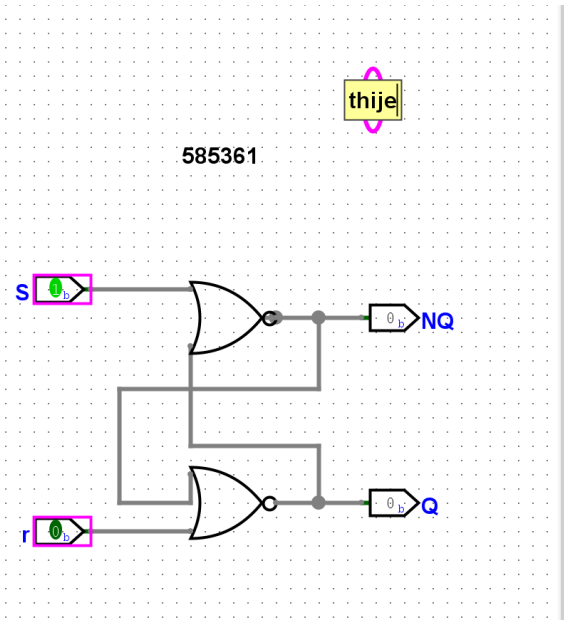

**Assignment 2.6: Vending Machine**

Screenshot Vending Machine in Logisim with your name and student number:

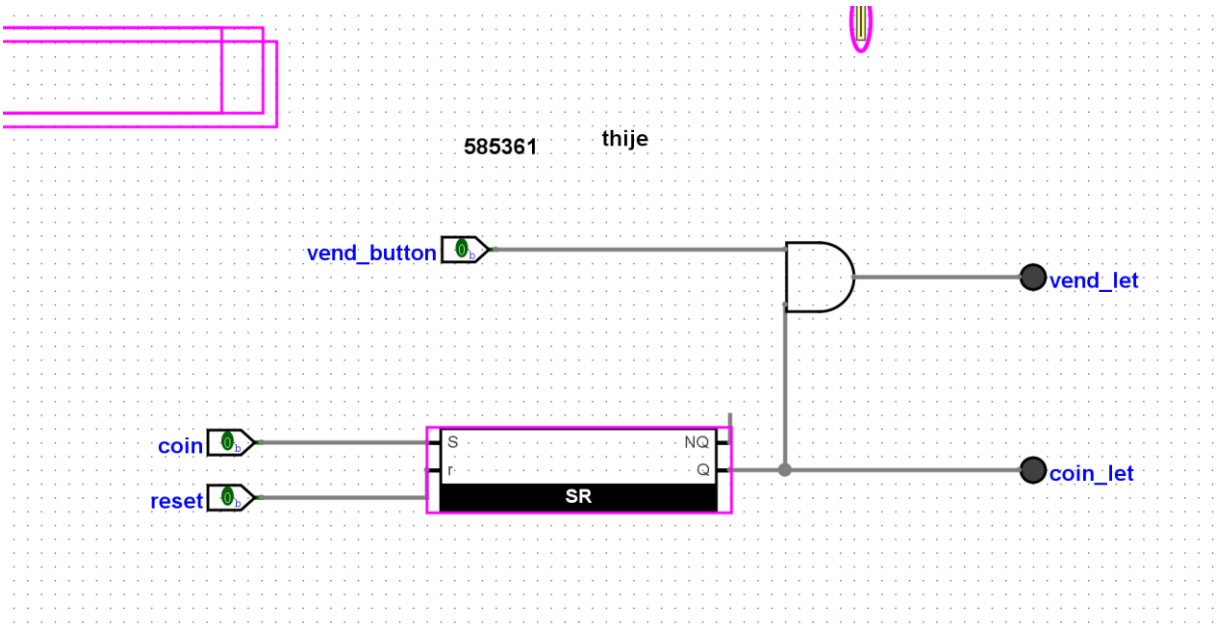


**Assignment 2.7: Bitwise operators**

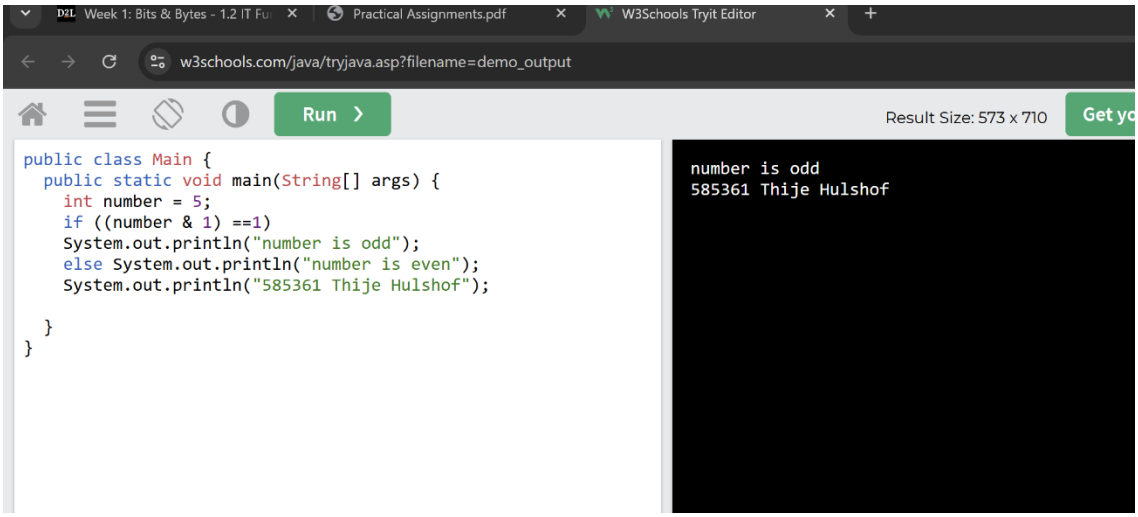


Notitie: nummer is oneven als laatste getal van binair 1 is.

```java
public class Main {
  public static void main(String[] args) {
  int number = 8;
if ((number & (number - 1)) == 0 && number != 0)
    System.out.println("number is a power of 2");
else
    System.out.println("number isn't a power of 2");
    System.out.println("585361 Thije Hulshof");

  }
}
```

```
number is a power of 2
585361 Thije Hulshof
```

Notitie: elke macht van 2 schuift de 1 in binair 1 plekje op.

```java
public class Main {
  public static void main(String[] args) {
  System.out.println("585361");
    final int READ = 4;
final int WRITE = 2;
final int EXECUTE = 1;
int userPermissions = 7;

if ((userPermissions & READ) != 0)
    System.out.println("User has read permissions");
else
    System.out.println("User can't read. No permissions.");

  }
}
```

```
585361
User has read permissions
```

```java
public class Main {
  public static void main(String[] args) {
  System.out.println("585361");
final int READ = 4;
final int WRITE = 2;
final int EXECUTE = 1;
int userPermissions = 0;

userPermissions = userPermissions | READ | EXECUTE;

System.out.println("User permissions: " + userPermissions);

  }
}
```

```
585361
User permissions: 5
```

Run ›

Result Size: 573 x 710

Get your own

```java
public class Main {
  public static void main(String[] args) {
  System.out.println("585361");
final int READ = 4;
final int WRITE = 2;
final int EXECUTE = 1;
int userPermissions = 6;

userPermissions = userPermissions ^ WRITE;

System.out.println("User permissions: " + userPermissions);

  }
}
```

```
585361
User permissions: 4
```

```java
public class Main {
  public static void main(String[] args) {
  System.out.println("585361");
int number = 5;
number = ~number + 1;
System.out.println("Number: " + number);

  }
}
```

```
585361
Number: -5
```

**Assignment 2.8: Java Application Bit Calculations**

Paste source code here, with a screenshot of a working application.

```
public class Main {

    public static void main(String[] args) {
        Scanner sc = new Scanner(System.in);

        System.out.print("Enter a number: ");
        int number = sc.nextInt();

        while (true) {
            System.out.println("\n=== MENU ===");
            System.out.println("1. Is number odd?");
            System.out.println("2. Is number a power of 2?");
            System.out.println("3. Two's complement of
number?");
            System.out.println("4. Exit");
            System.out.print("Choose an option: ");

            int choice = sc.nextInt();

            switch (choice) {
                case 1:
                    if (isOdd(number))
                        System.out.println(number + " is
odd");
                    else
                        System.out.println(number + " is
even");
                    break;

                case 2:
                    if (isPowerOfTwo(number))
                        System.out.println(number + " is a
power of 2");
                    else
                        System.out.println(number + " is NOT
a power of 2");
                    break;

                case 3:
                    int twos = twosComplement(number);
                    System.out.println("Two's complement of "
+ number + " = " + twos);
                    break;

                case 4:
                    System.out.println("Exiting program...");
                    return;

                default:
                    System.out.println("Invalid choice.");
            }
        }
    }

    public static boolean isOdd(int n) {
        return (n & 1) == 1;
    }

    public static boolean isPowerOfTwo(int n) {
        return n > 0 && (n & (n - 1)) == 0;
    }

    public static int twosComplement(int n) {
        return ~n + 1;
    }
}
```

Ready? Then save this file and export it as a pdf file with the name: **week2.pdf**