Template Week 3 – Hardware

Student number: 585361 (Thije Hulshof)

Assignment 3.1: Examine your phone

What processor is in your phone? A14 bionic-chip

To which architecture family does this processor belong? In other words, which Instruction Set Architecture (ISA) is used? ARM.V8.4-A 64-bit

How much RAM is in it? Voor de Iphone 12 is dat 4GB RAM.

How much storage does your phone have? 128 GB

What operating system is running on your phone? iOS 18.5

Approximately how many applications do you have installed? 192 applications

Which application do you use the most? Snapchat, Tiktok en Youtube

Can your phone be charged with what type of plug? Alleen draadloos, mijn oplaadpoort is kapot.

Which I/O ports can you visually see on your phone? De oplaadpoort

Assignment 3.2: Examine your laptop

What processor is in your laptop? Intel(R) Core(TM) Ultra 7 258V (2.20 GHz)

To which architecture family does this processor belong? In other words, which Instruction Set Architecture (ISA) is used?

How much RAM is in it? 32 GB

How much storage does your laptop have? 954 GB

Which operating system is running on your laptop? Windows 11 education

Approximately how many applications do you have installed? 81 apps

Which application do you use the most? Chrome, word or minecraft

Can your laptop be charged with what type of plug? USB-C plugin

Which I/O ports can you visually see on your laptop? 2 USB-C, 1 HDMI, SD-kaart, 1 USB-poort en 1 jackplug

Assignment 3.3: Power to the laptop

What is the input voltage?

100

What is the output voltage?

5-15V

How many watts can your power adapter deliver?

65W

Is the input voltage AC or DC?

AC

Is the output voltage AC or DC?

AC

AC/DC what is that?

AC is wisselstroom, DC is gelijkstroom

AC wisselt van richting terwijl DC gewoon van + naar - loopt

If you reverse the polarity of the output voltage, is that bad for your laptop?

Ja, sommige onderdelen in je laptop zijn gemaakt voor stroom die één kant op gaat. Als je dan de stroom wisselt kunnen deze onderdelen doorbranden.

You forgot your power adapter, your laptop normally needs 15 watts. You will be loaned a power adapter that can deliver 50 watts. Voltage, polarity, etc. are all the same compared to the original power adapter. You can connect the borrowed power adapter to your laptop. What will happen? Also explain why you think that.

Er gebeurd niks, je laptop pakt niet meer stroom dan nodig is. De adapter zou gewoon 15 watt aan de laptop aftappen.

Assignment 3.4: Build your dream PC

Screenshots PC configuration + motivation:

Ik ben gegaan voor deze onderdelen na wat zoeken op het internet. Zelf heb ik niet heel veel verstand over de inhoud van een PC, maar ik wou graag een zo goed mogelijke gaming PC zonder echt op budget te letten. Er belangrijk vond ik daarom de RAM, opslag en videokaart zodat ik veel spellen kan downloaden en op hoge kwaliteit kan spelen.

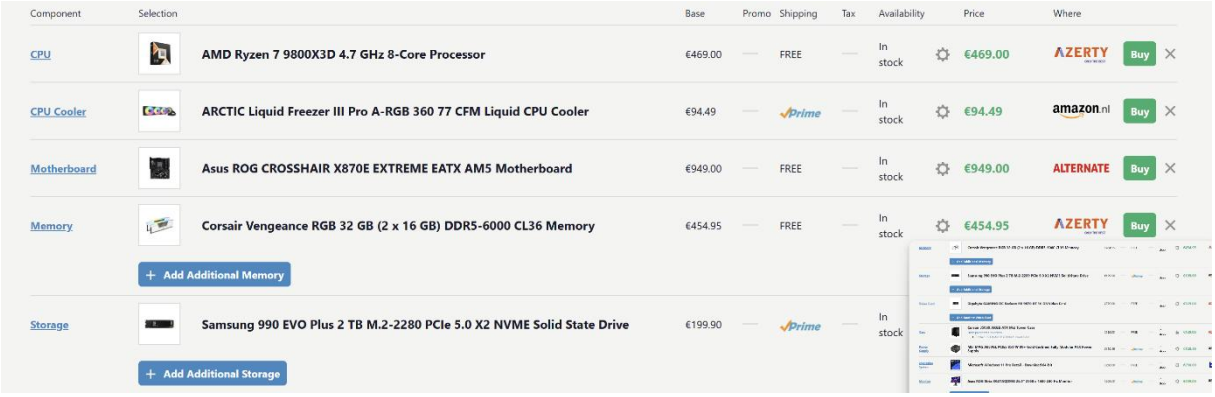

Assignment 3.5: Adders

Complete the **half adder**, **full adder** and **4-bit adder** assignment as described in the PowerPoint slides of week 3 in Logisim. Save the chip design and also export three PNG pictures of the separate finished designs. See the PowerPoint slides of week 3.

Paste the three exported PNG pictures in here.

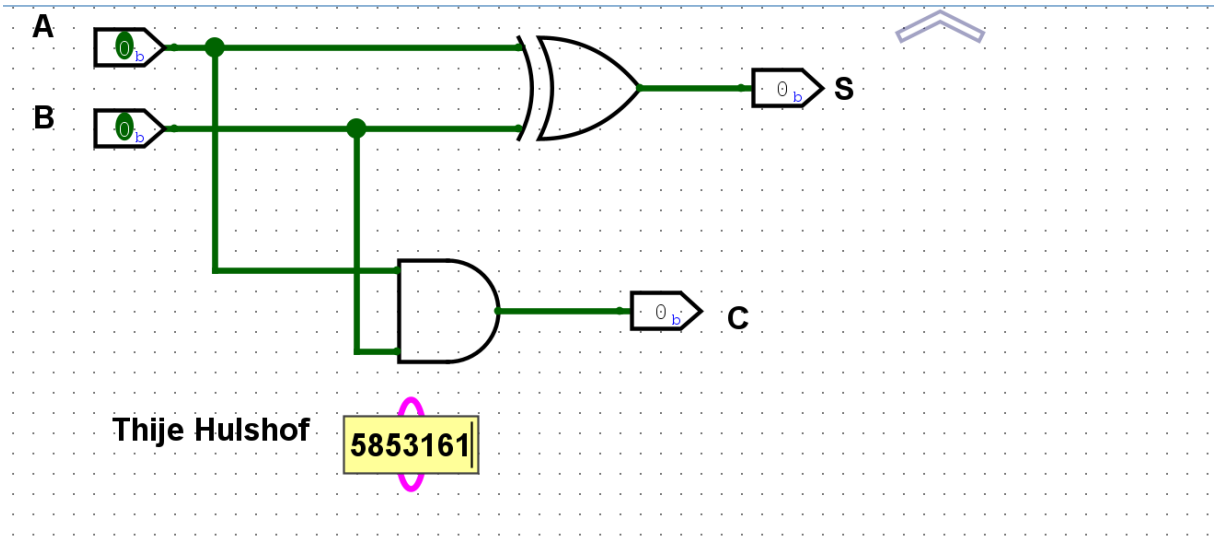

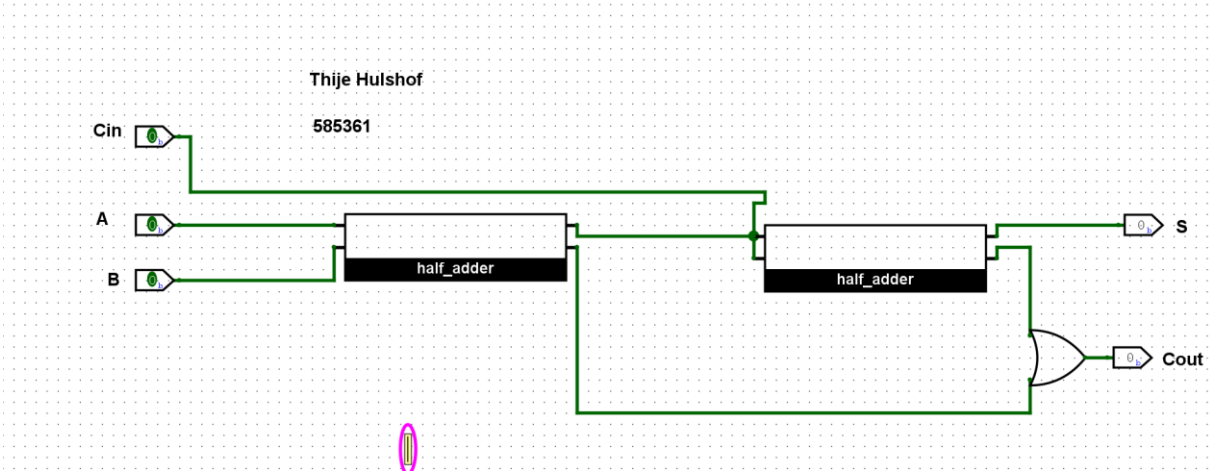

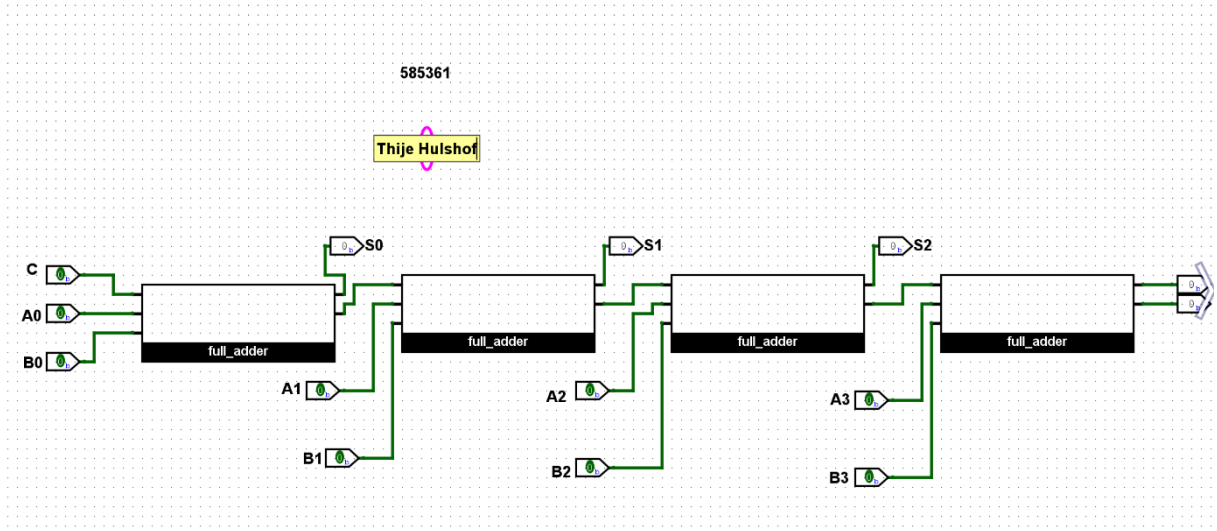

Notitie: de half-adder kan geen uitkomst meenemen in het volgende resultaat. (coin vendingmachine). Dit wordt opgelost met een full-adder die de uitkomst van de eerste meeneemt in de uitkomst bij de 2e.

Ready? Save this file and export it as a pdf file with the name: **week3.pdf**