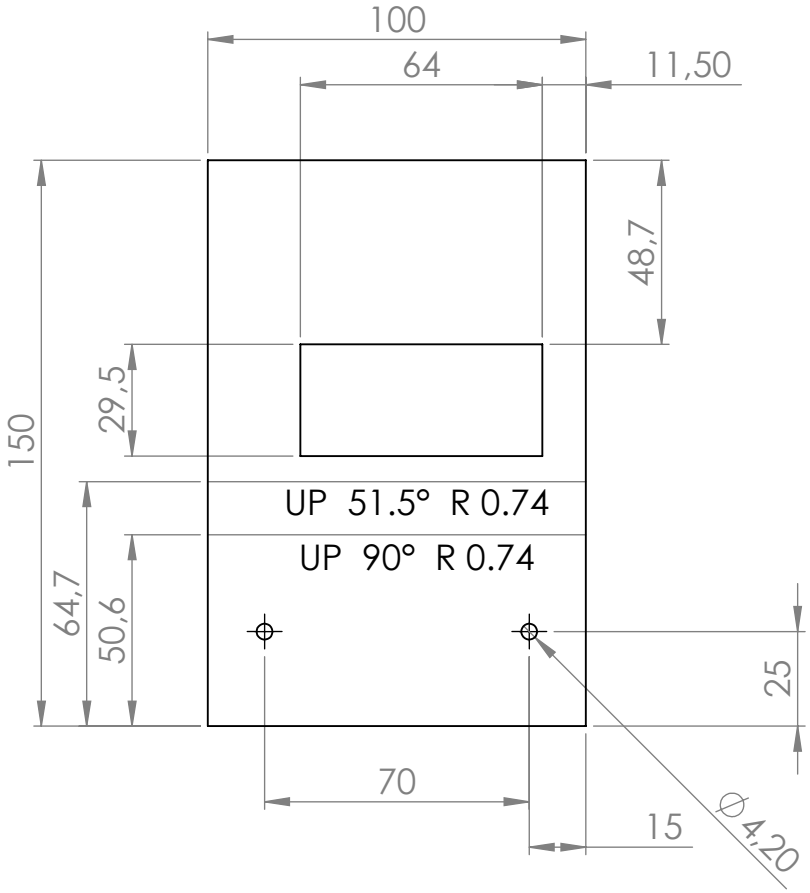

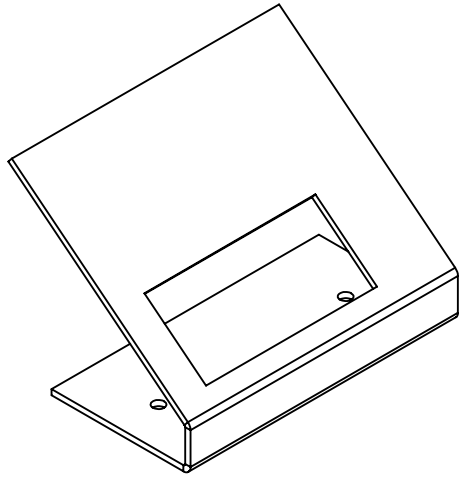

thickness sheet is 1mm.

UNLESS OTHERWISE SPECIFIED:
DIMENSIONS ARE IN MILLIMETERS
SURFACE FINISH:
TOLERANCES:
LINEAR: ±0.2 mm
ANGULAR: ±0.5°

DO NOT SCALE DRAWING

Robotics Minor Group 5: Tawi

TITLE: screenholderV2

Quantity:		DEBUR AND BREAK SHARP EDGES	MATERIAL:	Date:	
1	TU Delft		steel, sheet metal	21-10-2014	A4
				SCALE:1:2	SHEET 1 OF 1