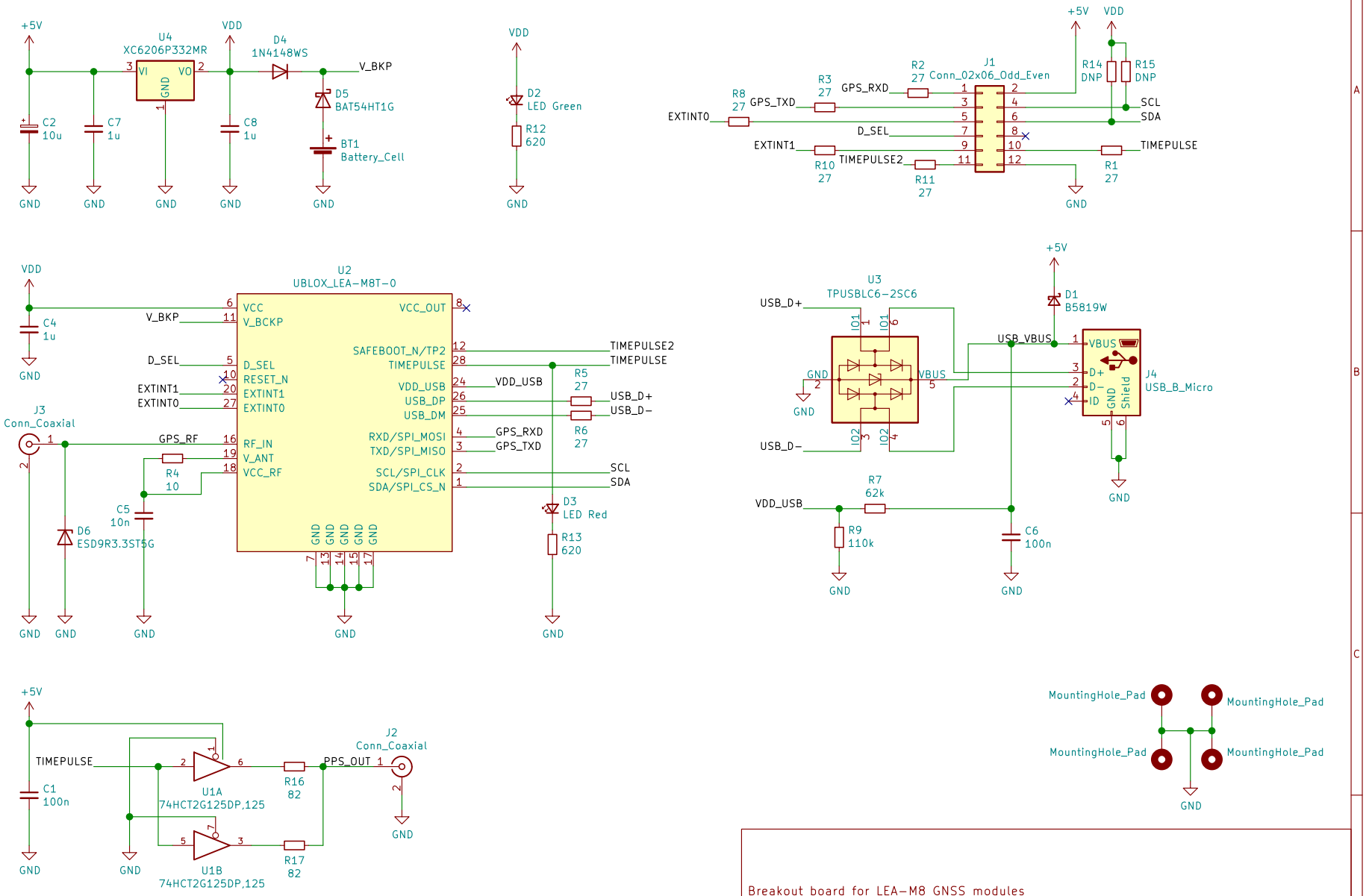

Breakout board for LEA-M8 GNSS modules

Matthias Welwarsky

Sheet: /

File: ublox-breakout.sch

Title: Ublox Breakout

Size: A4	Date: 2020-12-15	**Rev: 1**
KiCad E.D.A. kicad 5.1.8-5.1.8		Id: 1/1