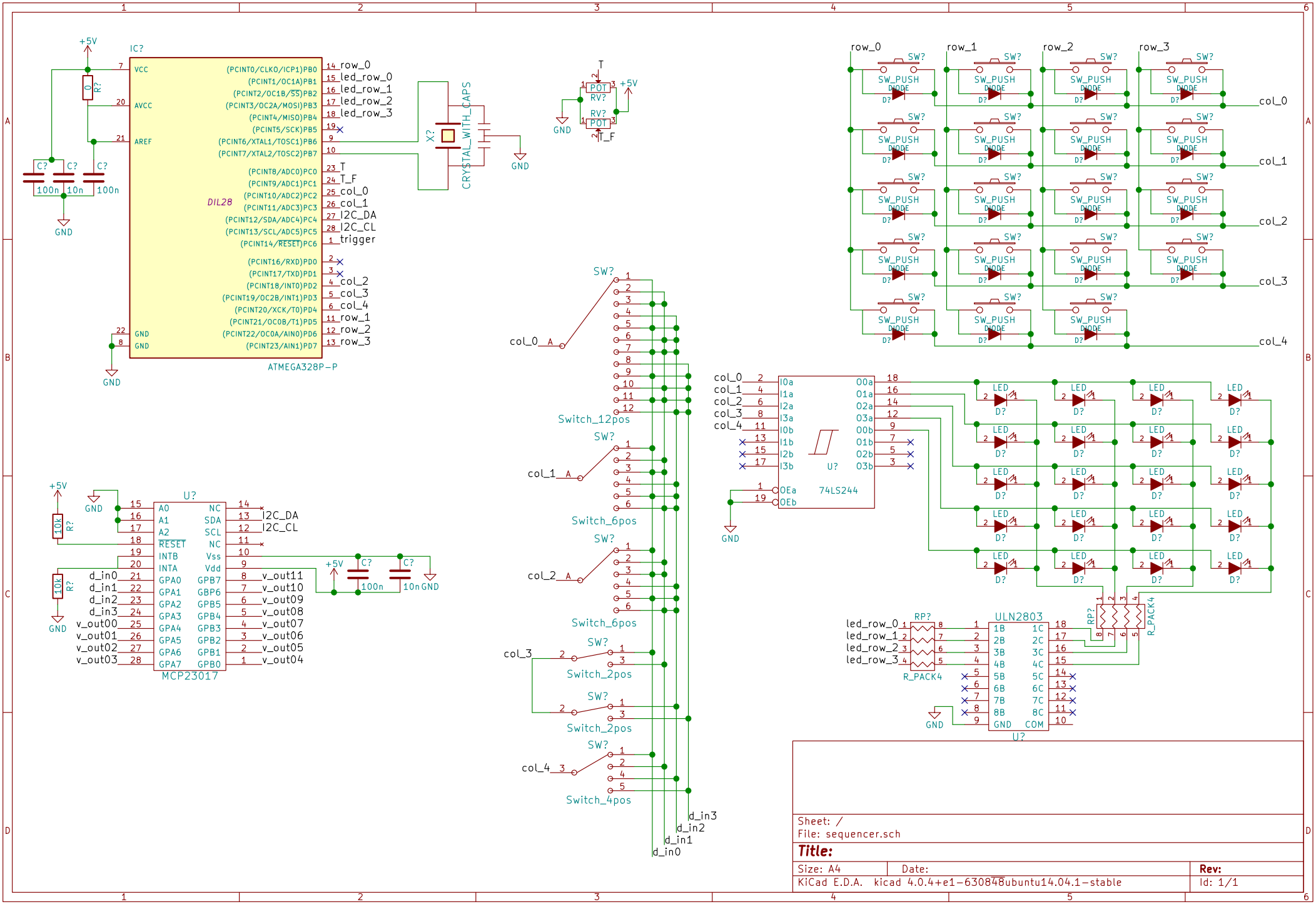
IC?
ATMEGA328P-P
DIL28
VCC
AVCC
AREF
GND
(PCINT0/CLKO/ICP1)PB0
(PCINT1/OC1A)PB1
(PCINT2/OC1B/SS)PB2
(PCINT3/OC2A/MOSI)PB3
(PCINT4/MISO)PB4
(PCINT5/SCK)PB5
(PCINT6/XTAL1/TOSC1)PB6
(PCINT7/XTAL2/TOSC2)PB7
(PCINT8/ADC0)PC0
(PCINT9/ADC1)PC1
(PCINT10/ADC2)PC2
(PCINT11/ADC3)PC3
(PCINT12/SDA/ADC4)PC4
(PCINT13/SCL/ADC5)PC5
(PCINT14/RESET)PC6
(PCINT16/RXD)PD0
(PCINT17/TXD)PD1
(PCINT18/INT0)PD2
(PCINT19/OC2B/INT1)PD3
(PCINT20/XCK/T0)PD4
(PCINT21/OC0B/T1)PD5
(PCINT22/OC0A/AIN0)PD6
(PCINT23/AIN1)PD7
row_0
led_row_0
led_row_1
led_row_2
led_row_3
T
T_F
col_0
col_1
I2C_DA
I2C_CL
trigger
col_2
col_3
col_4
row_1
row_2
row_3
CRYSTAL_WITH_CAPS
X?
POT
RV?
SW_PUSH
DIODE
SW?
D?
LED
74LS244
U?
I0a
I1a
I2a
I3a
I0b
I1b
I2b
I3b
OEa
OEb
O0a
O1a
O2a
O3a
O0b
O1b
O2b
O3b
Switch_12pos
Switch_6pos
Switch_2pos
Switch_4pos
MCP23017
A0
A1
A2
RESET
INTB
INTA
GPA0
GPA1
GPA2
GPA3
GPA4
GPA5
GPA6
GPA7
NC
SDA
SCL
Vss
Vdd
GPB7
GBP6
GPB5
GPB4
GPB3
GPB2
GPB1
GPB0
d_in0
d_in1
d_in2
d_in3
v_out00
v_out01
v_out02
v_out03
v_out11
v_out10
v_out09
v_out08
v_out07
v_out06
v_out05
v_out04
ULN2803
1B
2B
3B
4B
5B
6B
7B
8B
1C
2C
3C
4C
5C
6C
7C
8C
COM
RP?
R_PACK4
+5V
R?
C?
100n
10n
Sheet: /
File: sequencer.sch
Title:
Size: A4
Date:
Rev:
KiCad E.D.A. kicad 4.0.4+e1-630848ubuntu14.04.1-stable
Id: 1/1