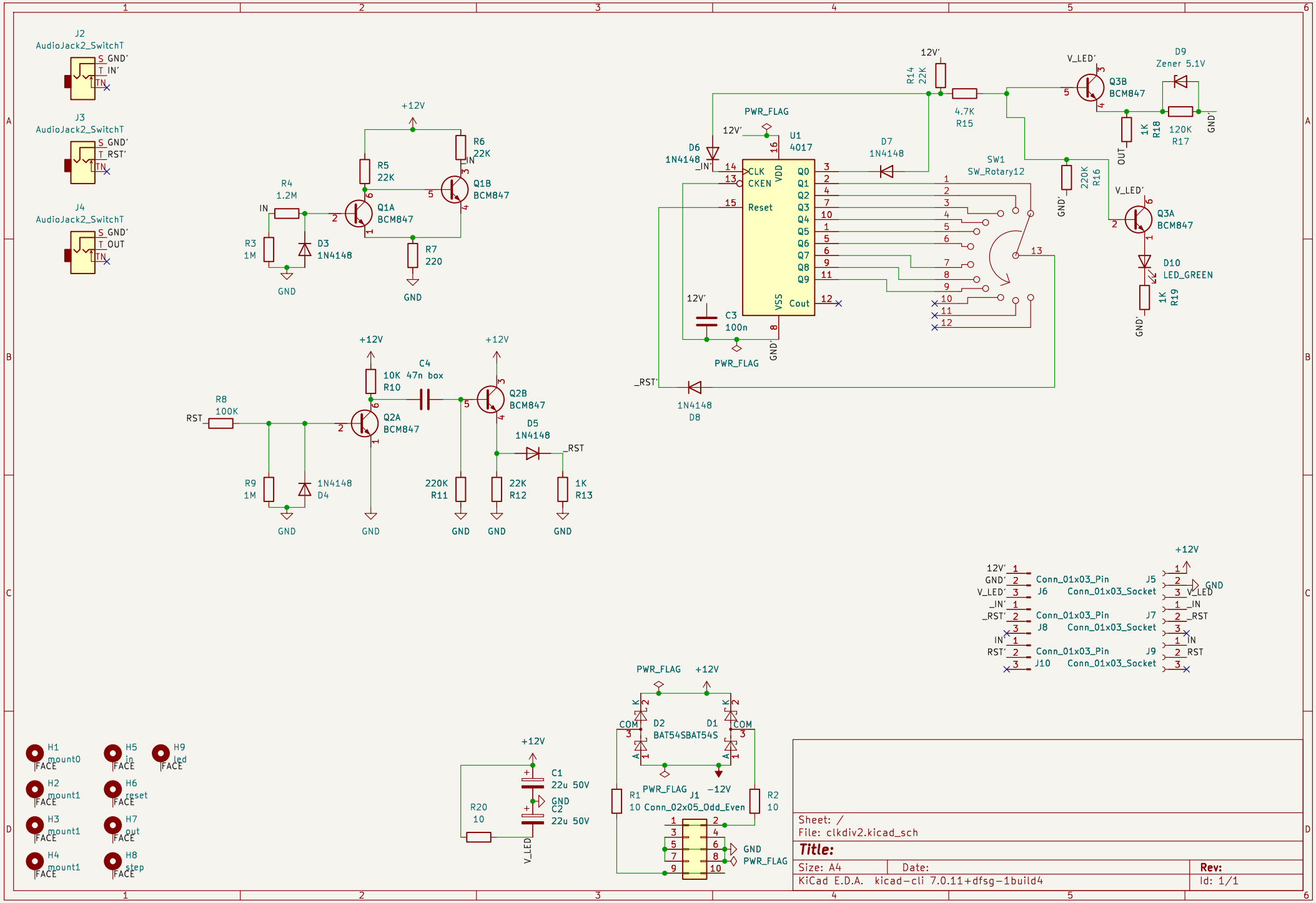
J2
AudioJack2_SwitchT
S GND'
T IN'
TN
J3
AudioJack2_SwitchT
S GND'
T RST'
TN
J4
AudioJack2_SwitchT
S GND'
T OUT
TN
+12V
R6
22K
IN
R5
22K
Q1B
BCM847
R4
1.2M
IN
Q1A
BCM847
R3
1M
D3
1N4148
R7
220
GND
GND
12V'
R14
22K
4.7K
R15
V_LED'
Q3B
BCM847
D9
Zener 5.1V
1K
R18
120K
R17
GND'
OUT
PWR_FLAG
12V'
U1
4017
D6
1N4148
_IN'
CLK
CKEN
Reset
VDD
VSS
Q0
Q1
Q2
Q3
Q4
Q5
Q6
Q7
Q8
Q9
Cout
D7
1N4148
SW1
SW_Rotary12
220K
R16
GND'
V_LED'
Q3A
BCM847
D10
LED_GREEN
1K
R19
GND'
12V'
C3
100n
PWR_FLAG
GND'
_RST'
1N4148
D8
+12V
10K
R10
C4
47n box
+12V
Q2B
BCM847
R8
100K
RST
Q2A
BCM847
D5
1N4148
_RST
R9
1M
1N4148
D4
220K
R11
22K
R12
1K
R13
GND
GND
GND
GND
GND
+12V
12V'
GND'
V_LED'
_IN'
_RST'
IN'
RST'
Conn_01x03_Pin
J6
Conn_01x03_Socket
Conn_01x03_Pin
J8
Conn_01x03_Socket
Conn_01x03_Pin
J10
Conn_01x03_Socket
J5
GND
V_LED
J7
_IN
_RST
J9
IN
RST
PWR_FLAG
+12V
COM
D2
BAT54SBAT54S
D1
COM
PWR_FLAG
J1
-12V
R1
10
Conn_02x05_Odd_Even
R2
10
GND
PWR_FLAG
+12V
C1
22u 50V
GND
C2
22u 50V
R20
10
V_LED
H1
mount0
FACE
H2
mount1
FACE
H3
mount1
FACE
H4
mount1
FACE
H5
in
FACE
H6
reset
FACE
H7
out
FACE
H8
step
FACE
H9
led
FACE
Sheet: /
File: clkdiv2.kicad_sch
Title:
Size: A4
Date:
Rev:
KiCad E.D.A. kicad-cli 7.0.11+dfsg-1build4
Id: 1/1